SLIDE 2

Objectives

- Define Cross Correlation and Auto-Correlation
- Describe the Channelization Process in IS-95
- Define Orthogonal Codes
- Define PN codes
- Describe Properties of Orthogonal and PN Codes

SLIDE 4

Introduction

- Correlation
- Orthogonal Codes
- Pseudorandom Noise Codes

SLIDE 6

Cross & Auto Correlations

Cross Correlation

$$\frac{1}{T}\int_0^T v(t)g(t)dt$$

Auto Correlation

$$\frac{1}{T}\int_0^T v(t)v(t-\tau)dt$$

SLIDE 8

Orthogonality and Correlation (in the Digital Domain)

Two binary sequences are orthogonal (uncorrelated) if the process of 'XORing' them results in an equal number of 1's and 0's:

Example:
$$\begin{array}{r} 1111 \\ \oplus\ \underline{0101} \\ 1010 \end{array}$$

Exclusive OR (XOR) Truth Table

A	B	Result
0	0	0
0	1	1
1	0	1
1	1	0

SLIDE 10

Orthogonal Sequence Generation

Example:

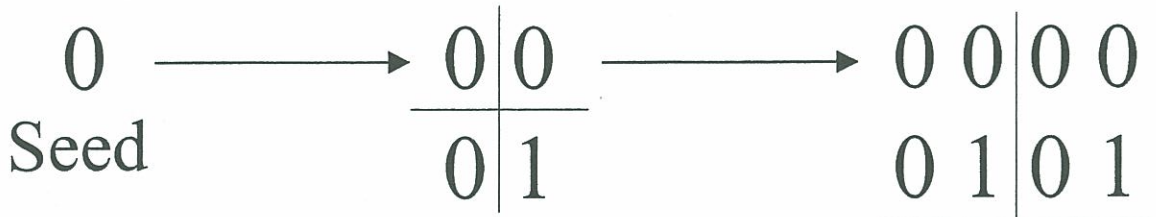

Repeat
- Right
- Below

Invert (diagonally)

Section 2 - Codes for Channelization

SLIDE 12

Walsh Codes in IS-95

Walsh Chip within Symbol

Modulation Symbol Index	0123	4567	11 8901	1111 2345	1111 6789	2222 0123	2222 4567	2233 8901	3333 2345	3333 6789	4444 0123	4444 4567	4455 8901	5555 2345	5555 6789	6666 0123
0	0000	0000	0000	0000	0000	0000	0000	0000	0000	0000	0000	0000	0000	0000	0000	0000
1	0101	0101	0101	0101	0101	0101	0101	0101	0101	0101	0101	0101	0101	0101	0101	0101
2	0011	0011	0011	0011	0011	0011	0011	0011	0011	0011	0011	0011	0011	0011	0011	0011
3	0110	0110	0110	0110	0110	0110	0110	0110	0110	0110	0110	0110	0110	0110	0110	0110
4	0000	1111	0000	1111	0000	1111	0000	1111	0000	1111	0000	1111	0000	1111	0000	1111
5	0101	1010	0101	1010	0101	1010	0101	1010	0101	1010	0101	1010	0101	1010	0101	1010
6	0011	1100	0011	1100	0011	1100	0011	1100	0011	1100	0011	1100	0011	1100	0011	1100
7	0110	1001	0110	1001	0110	1001	0110	1001	0110	1001	0110	1001	0110	1001	0110	1001
8	0000	0000	1111	1111	0000	0000	1111	1111	0000	0000	1111	1111	0000	0000	1111	1111
9	0101	0101	1010	1010	0101	0101	1010	1010	0101	0101	1010	1010	0101	0101	1010	1010
10	0011	0011	1100	1100	0011	0011	1100	1100	0011	0011	1100	1100	0011	0011	1100	1100
11	0110	0110	1001	1001	0110	0110	1001	1001	0110	0110	1001	1001	0110	0110	1001	1001
12	0000	1111	1111	0000	0000	1111	1111	0000	0000	1111	1111	0000	0000	1111	1111	0000
13	0101	1010	1010	0101	0101	1010	1010	0101	0101	1010	1010	0101	0101	1010	1010	0101
14	0011	1100	1100	0011	0011	1100	1100	0011	0011	1100	1100	0011	0011	1100	1100	0011
15	0110	1001	1001	0110	0110	1001	1001	0110	0110	1001	1001	0110	0110	1001	1001	0110
16	0000	0000	0000	0000	1111	1111	1111	1111	0000	0000	0000	0000	1111	1111	1111	1111
17	0101	0101	0101	0101	1010	1010	1010	1010	0101	0101	0101	0101	1010	1010	1010	1010
18	0011	0011	0011	0011	1100	1100	1100	1100	0011	0011	0011	0011	1100	1100	1100	1100
19	0110	0110	0110	0110	1001	1001	1001	1001	0110	0110	0110	0110	1001	1001	1001	1001
20	0000	1111	0000	1111	1111	0000	1111	0000	0000	1111	0000	1111	1111	0000	1111	0000
21	0101	1010	0101	1010	1010	0101	1010	0101	0101	1010	0101	1010	1010	0101	1010	0101
22	0011	1100	0011	1100	1100	0011	1100	0011	0011	1100	0011	1100	1100	0011	1100	0011
23	0110	1001	0110	1001	1001	0110	1001	0110	0110	1001	0110	1001	1001	0110	1001	0110
24	0000	0000	1111	1111	1111	1111	0000	0000	0000	0000	1111	1111	1111	1111	0000	0000
25	0101	0101	1010	1010	1010	1010	0101	0101	0101	0101	1010	1010	1010	1010	0101	0101
26	0011	0011	1100	1100	1100	1100	0011	0011	0011	0011	1100	1100	1100	1100	0011	0011
27	0110	0110	1001	1001	1001	1001	0110	0110	0110	0110	1001	1001	1001	1001	0110	0110
28	0000	1111	1111	0000	1111	0000	1111	0000	1111	0000	1111	0000	1111	0000	0000	1111
29	0101	1010	1010	0101	1010	0101	0101	1010	0101	1010	1010	0101	1010	0101	0101	1010
30	0011	1100	1100	0011	1100	0011	0011	1100	0011	1100	1100	0011	1100	0011	0011	1100
31	0110	1001	1001	0110	1001	0110	0110	1001	0110	1001	1001	0110	1001	0110	0110	1001
32	0000	0000	0000	0000	0000	0000	0000	0000	1111	1111	1111	1111	1111	1111	1111	1111
33	0101	0101	0101	0101	0101	0101	0101	0101	1010	1010	1010	1010	1010	1010	1010	1010
34	0011	0011	0011	0011	0011	0011	0011	0011	1100	1100	1100	1100	1100	1100	1100	1100
35	0110	0110	0110	0110	0110	0110	0110	0110	1001	1001	1001	1001	1001	1001	1001	1001
36	0000	1111	0000	1111	0000	1111	0000	1111	1111	0000	1111	0000	1111	0000	1111	0000
37	0101	1010	0101	1010	0101	1010	0101	1010	1010	0101	1010	0101	1010	0101	1010	0101
38	0011	1100	0011	1100	0011	1100	0011	1100	1100	0011	1100	0011	1100	0011	1100	0011
39	0110	1001	0110	1001	0110	1001	0110	1001	1001	0110	1001	0110	1001	0110	1001	0110
40	0000	0000	1111	1111	0000	0000	1111	1111	1111	1111	0000	0000	1111	1111	0000	0000
41	0101	0101	1010	1010	0101	0101	1010	1010	1010	1010	0101	0101	1010	1010	0101	0101
42	0011	0011	1100	1100	0011	0011	1100	1100	1100	1100	0011	0011	1100	1100	0011	0011
43	0110	0110	1001	1001	0110	0110	1001	1001	1001	1001	0110	0110	1001	1001	0110	0110
44	0000	1111	1111	0000	0000	1111	1111	0000	1111	0000	0000	1111	1111	0000	0000	1111
45	0101	1010	1010	0101	0101	1010	1010	0101	1010	0101	0101	1010	1010	0101	0101	1010
46	0011	1100	1100	0011	0011	1100	1100	0011	1100	0011	0011	1100	1100	0011	0011	1100
47	0110	1001	1001	0110	0110	1001	1001	0110	1001	0110	0110	1001	1001	0110	0110	1001
48	0000	0000	0000	0000	1111	1111	1111	1111	1111	1111	1111	1111	0000	0000	0000	0000
49	0101	0101	0101	0101	1010	1010	1010	1010	1010	1010	1010	1010	0101	0101	0101	0101
50	0011	0011	0011	0011	1100	1100	1100	1100	1100	1100	1100	1100	0011	0011	0011	0011
51	0110	0110	0110	0110	1001	1001	1001	1001	1001	1001	1001	1001	0110	0110	0110	0110
52	0000	1111	0000	1111	1111	0000	1111	0000	1111	0000	1111	0000	0000	1111	0000	1111
53	0101	1010	0101	1010	1010	0101	1010	0101	1010	0101	1010	0101	0101	1010	0101	1010
54	0011	1100	0011	1100	1100	0011	1100	0011	1100	0011	1100	0011	0011	1100	0011	1100
55	0110	1001	0110	1001	1001	0110	1001	0110	1001	0110	1001	0110	0110	1001	0110	1001
56	0000	0000	1111	1111	1111	1111	0000	0000	1111	1111	0000	0000	0000	0000	1111	1111
57	0101	0101	1010	1010	1010	1010	0101	0101	1010	1010	0101	0101	0101	0101	1010	1010
58	0011	0011	1100	1100	1100	1100	0011	0011	1100	1100	0011	0011	0011	0011	1100	1100
59	0110	0110	1001	1001	1001	1001	0110	0110	1001	1001	0110	0110	0110	0110	1001	1001
60	0000	1111	1111	0000	1111	0000	1111	0000	1111	0000	1111	0000	1111	0000	1111	0000
61	0101	1010	1010	0101	1010	0101	0101	1010	1010	0101	0101	1010	0101	1010	1010	0101
62	0011	1100	1100	0011	1100	0011	0011	1100	1100	0011	0011	1100	0011	1100	1100	0011
63	0110	1001	1001	0110	1001	0110	0110	1001	1001	0110	0110	1001	0110	1001	1001	0110

SLIDE 14

Orthogonal Spreading

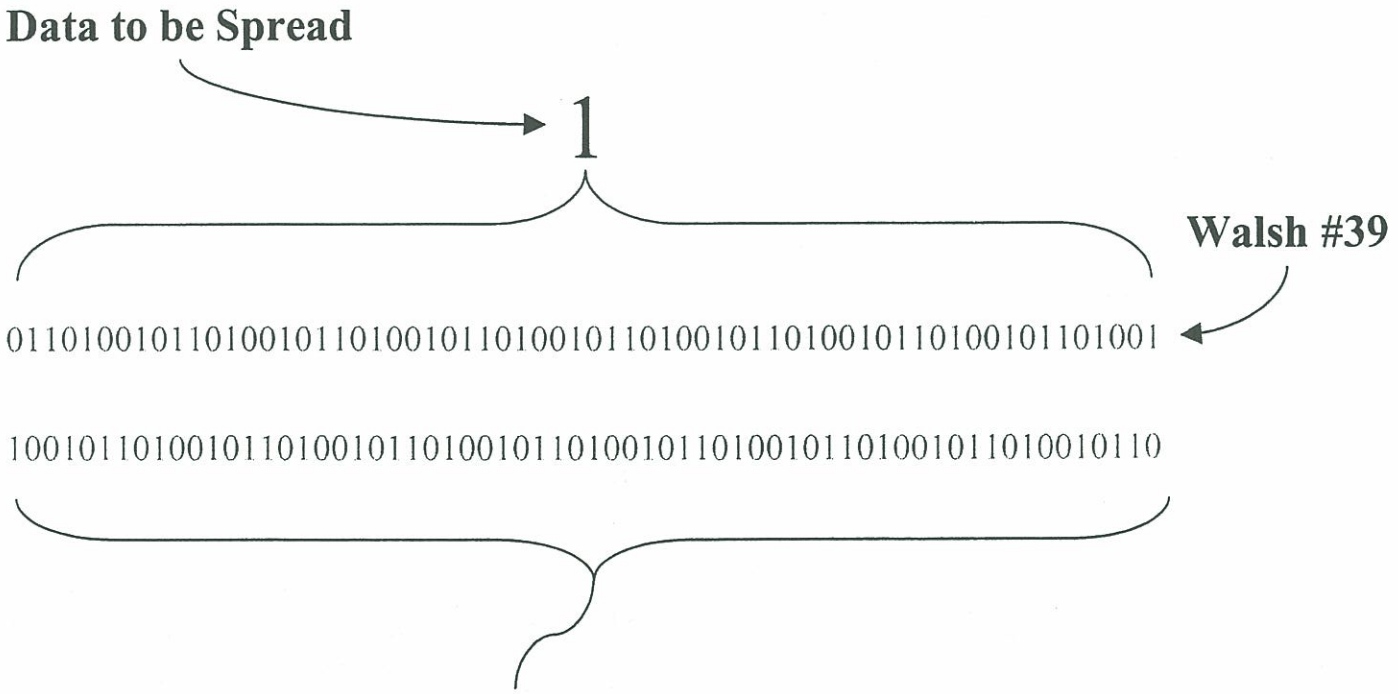

Data stream to be transmitted - representing the original "1"
Note: The data to be transmitted is actually the inverse of Walsh #39

SLIDE 16

Orthogonal Spreading

Example (using a 4-bit Walsh Code):

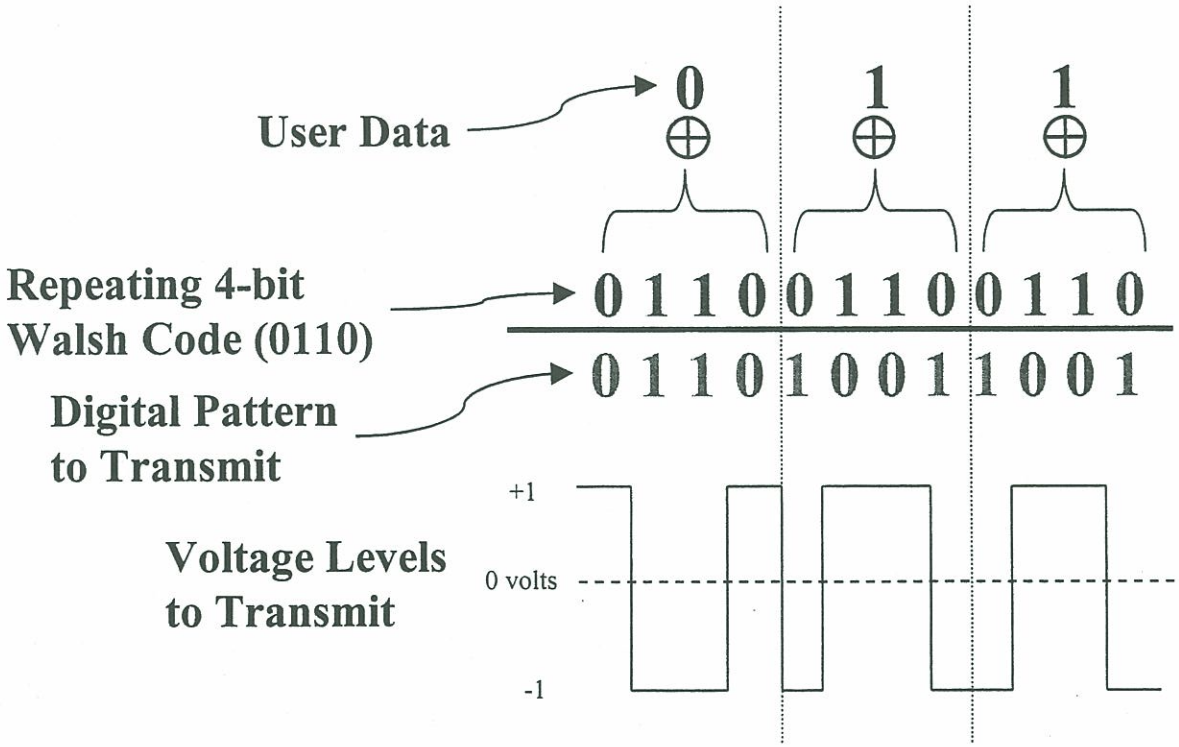

Section 2 - Codes for Channelization

SLIDE 18

Despreading

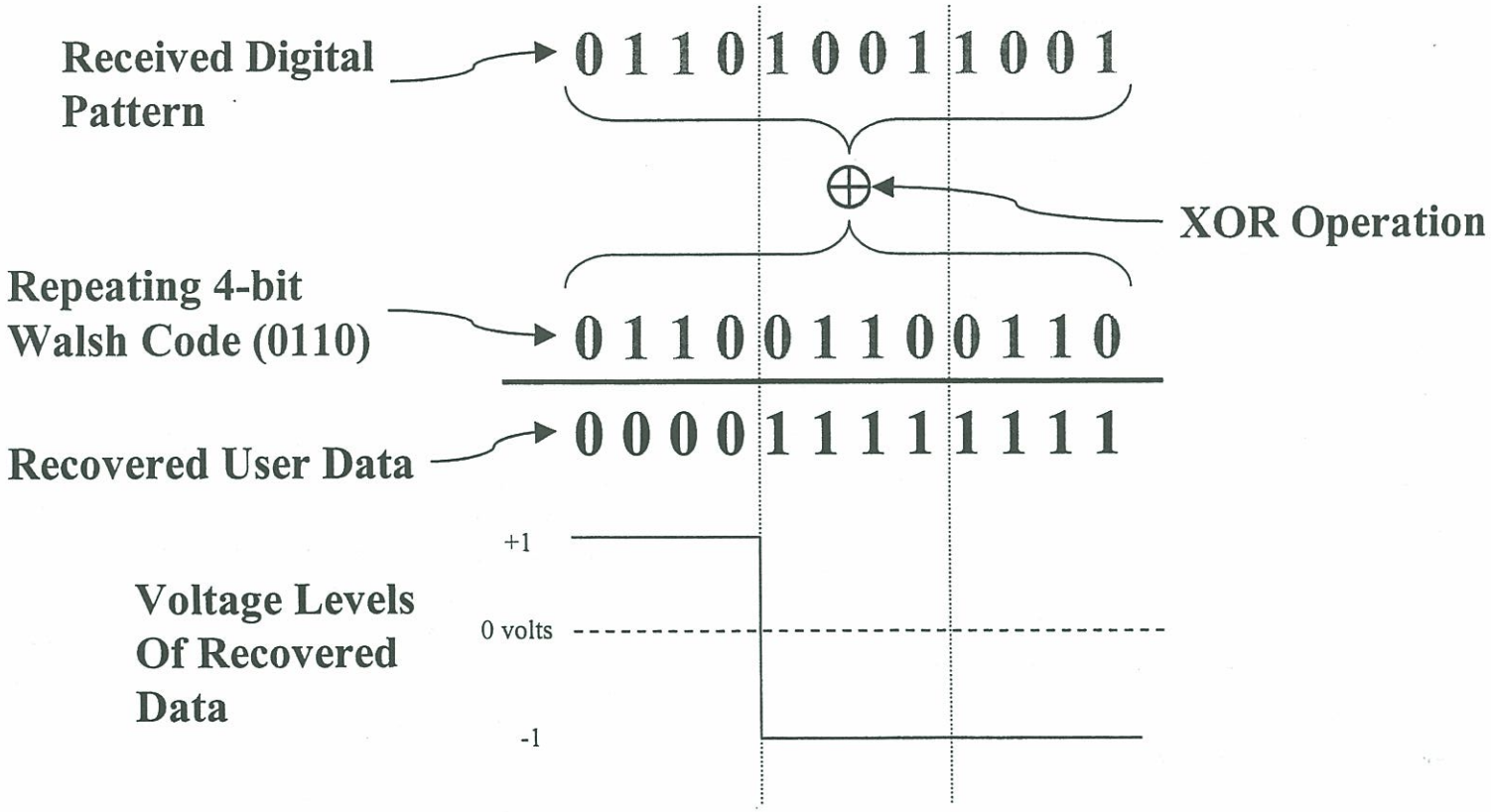

SLIDE 20

Despreading with Wrong Walsh Code

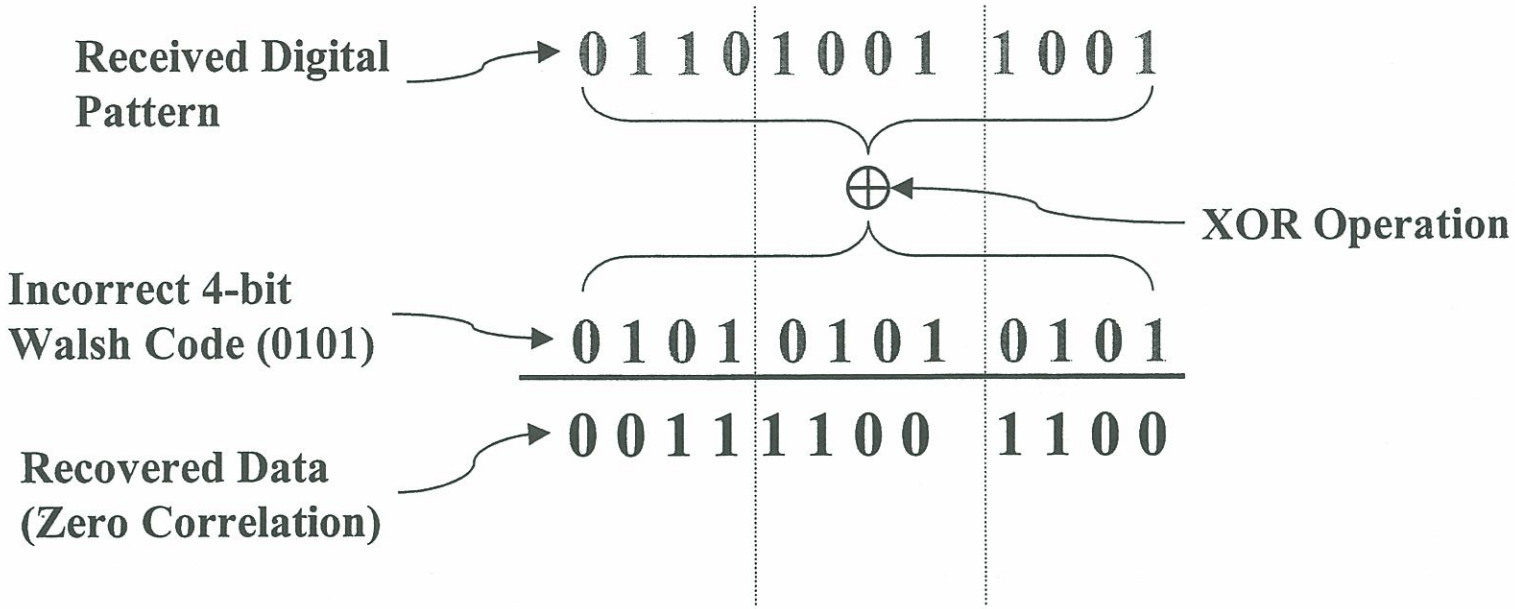

Section 2 - Codes for Channelization

SLIDE 22

Spreading using Voltage Level References

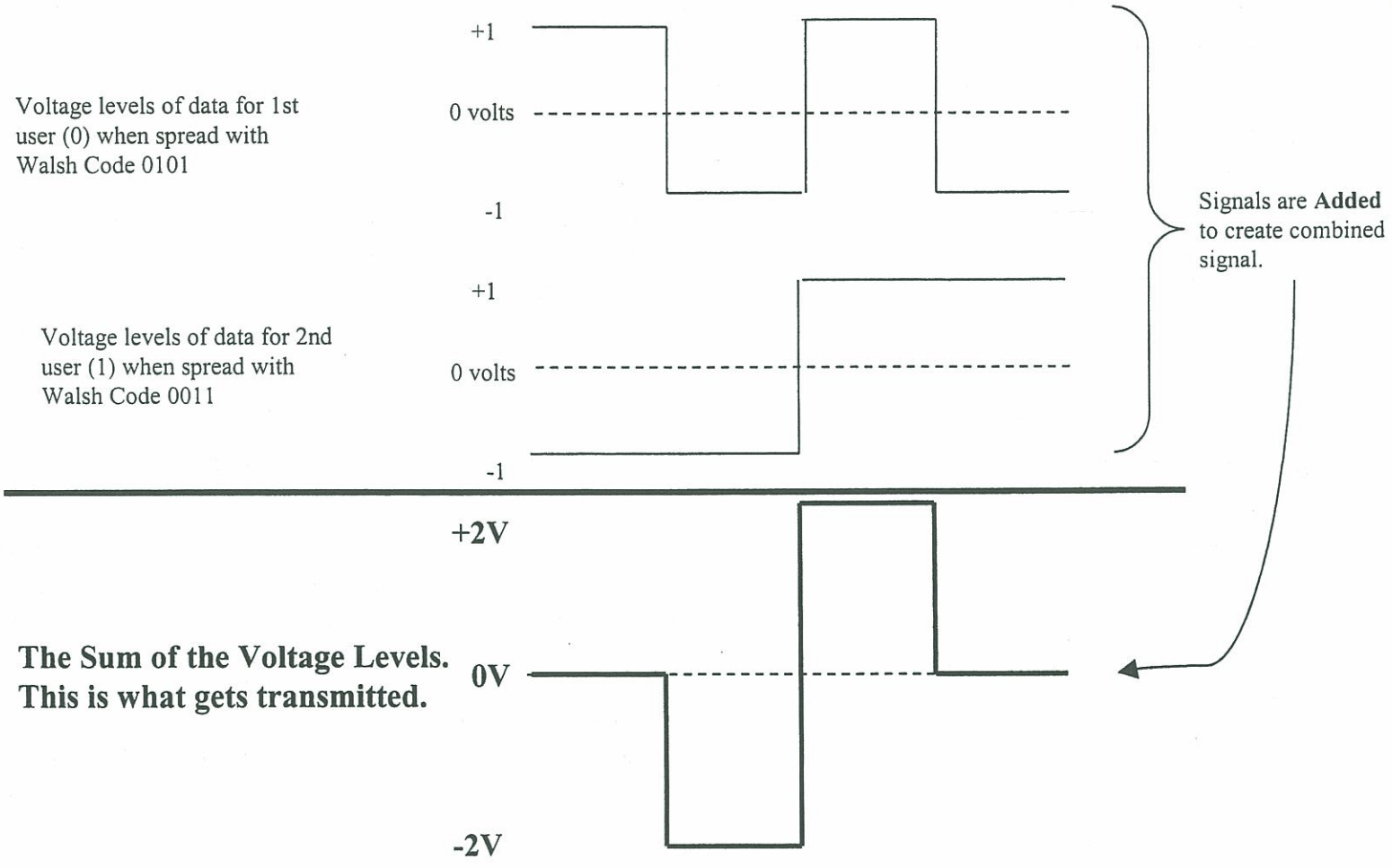

Section 2 - Codes for Channelization

SLIDE 24

Despreading

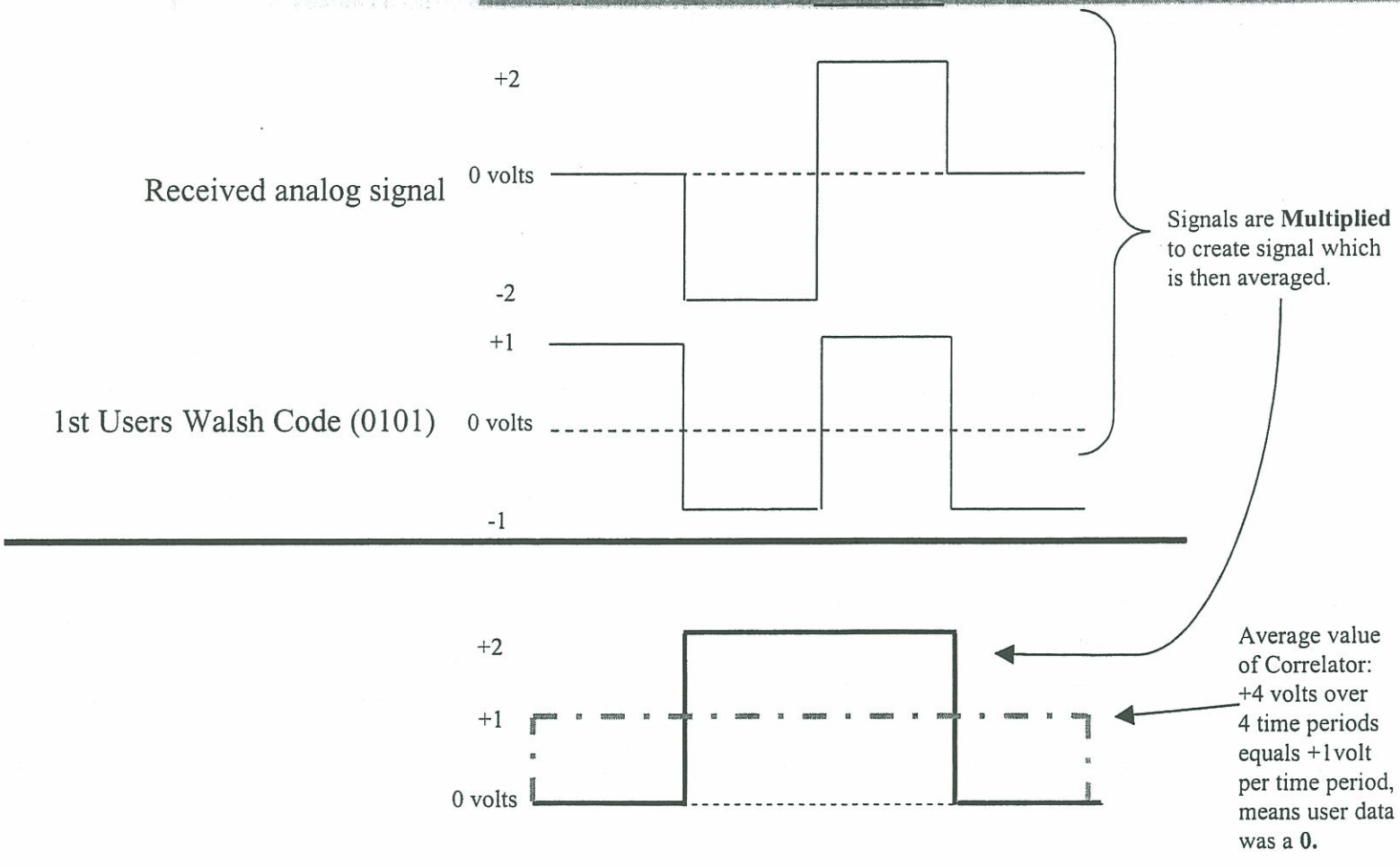

SLIDE 26

Randomness Properties

- Relative frequencies of "0" and "1" are each 1/2
- Run lengths (of zeros and ones) are as expected in a coin-flipping experiment; half of run lengths are unity, one-quarter are of length two; one eight are of length 3; a fraction of $1/2^n$ of all runs are of length n for all finite n
- If the random sequence is shifted by any non-zero number of elements, the resulting sequence will have an equal number of agreements and disagreements with the original sequence.

SLIDE 28

PN Codes

- Every Linear Shift Register (LSR) of length r is periodic with period $p < 2^r$
- The period p is the smallest positive integer for which f(D), the *characteristic polynomial*, divides $1-D^p$.
- A necessary condition to generate the Maximum Length (Linear) Shift Register (MLSR) (i.e. run length $p=2^r-1$) is that f(D) be irreducible.

SLIDE 30

No. of Irreducible Polynomials

$$N_p(r) = \frac{2^r - 1}{r} \; X \; \prod_{i=1}^{j} \frac{p_i - 1}{p_i}$$

$$2^r - 1 = \prod_{i=1}^{j} p_i^{e_i}$$

SLIDE 32

Pseudorandom Noise (PN Codes)

- Two Short Codes (2^{15} –1= 32,767)
  (an extra 0 is added to make it 2^{15})
  - Used for Quadrature Spreading
  - Unique Offsets Used to Identify Sectors (or omni-sector cell)
  - Repeat every 26.67 msec (32,768/1,228,800)
- One Long Code (2^{42}-1= 4400 Billion)
  - Used for Reverse Link Spreading and Forward Link Scrambling
  - Repeats Approximately Every 41.2 days

$$\frac{2^{42}-1}{1{,}228{,}800}$$

SLIDE 34

Autocorrelation of a PN code

(# of agreements - # of disagreements)/N

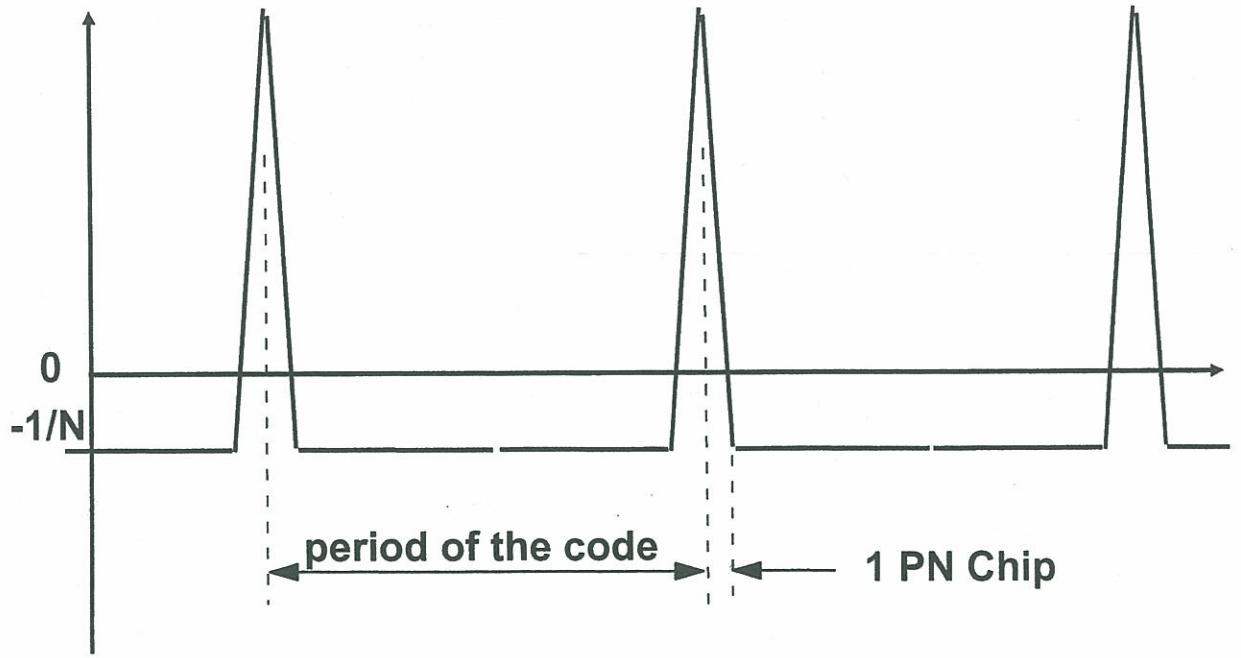

SLIDE 36

Code Generation

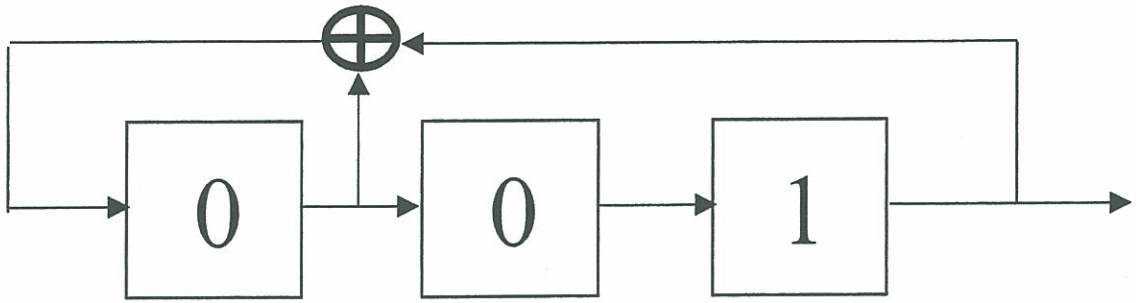

- **Initialize the Registers with 001**
- **Output will be a 7-digit sequence that repeats continually: 10011101**

SLIDE 38

States of the PN Generator

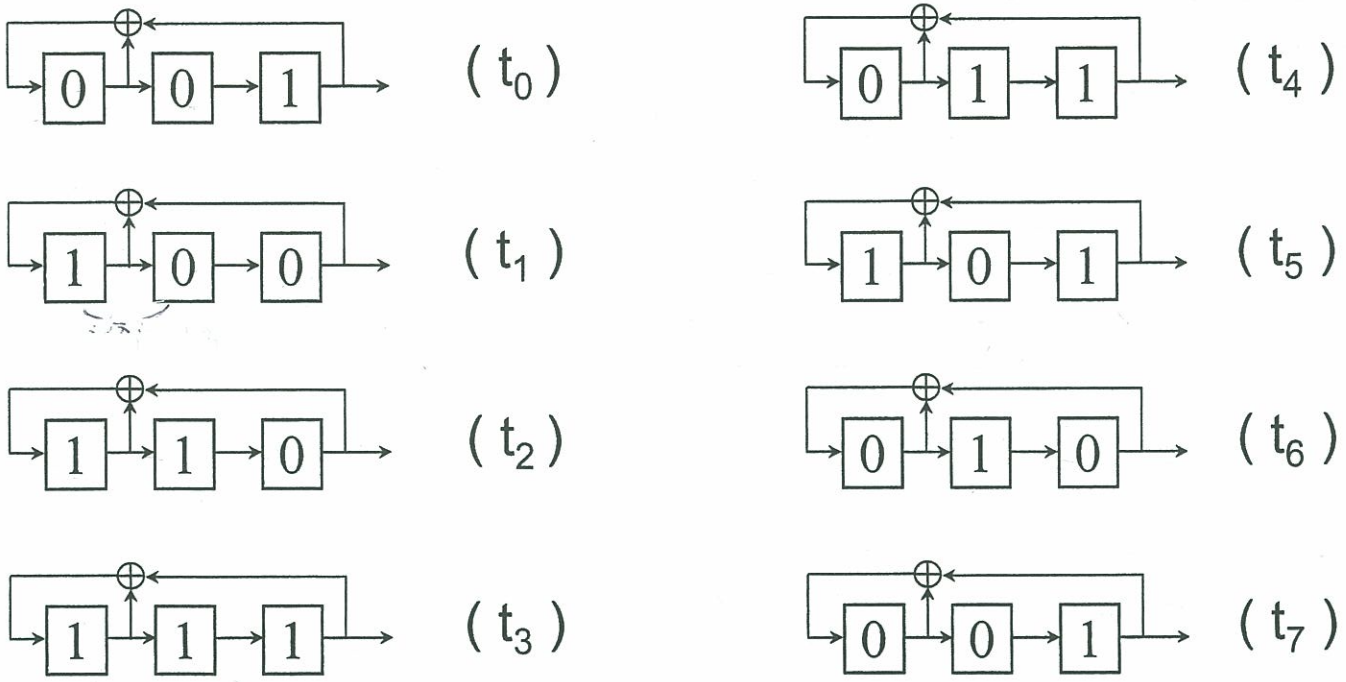

Repeating Output Sequence: 1001110, 1001110,.....

SLIDE 40

Masking for Shifted PN Output

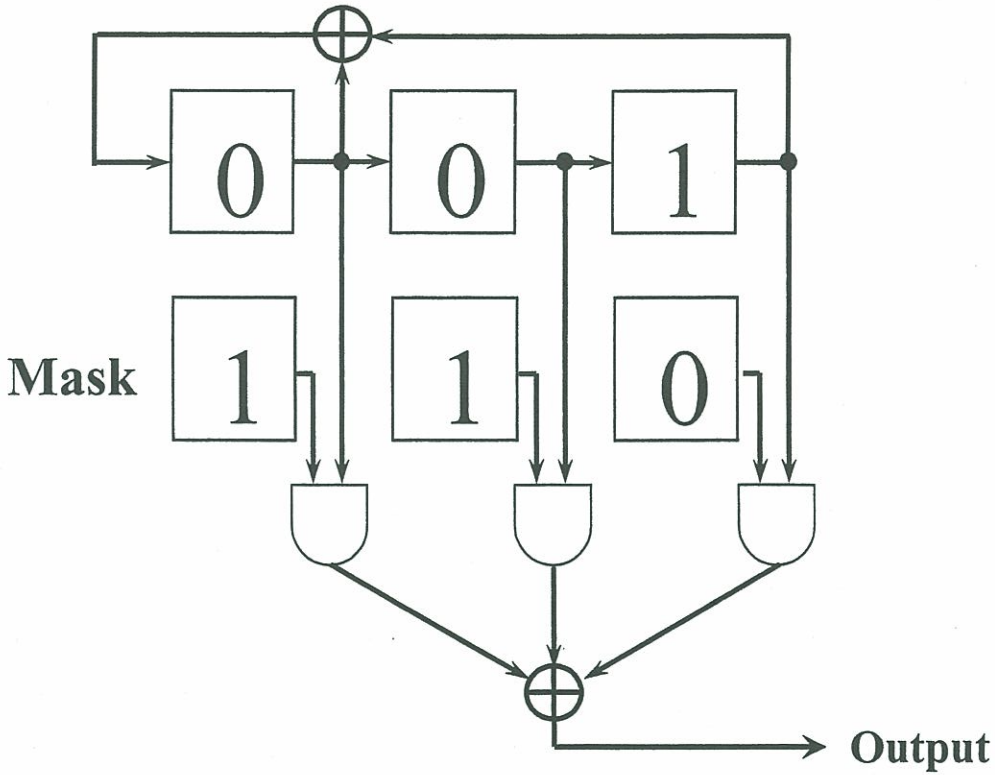

Section 2 - Codes for Channelization

SLIDE 42

PN Masking Example

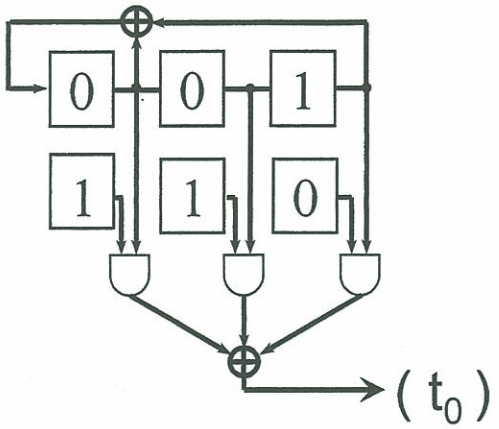

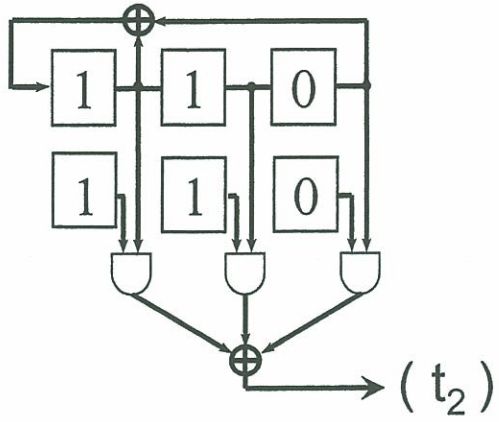

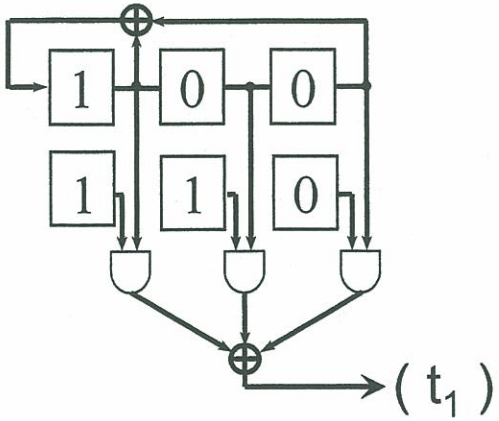

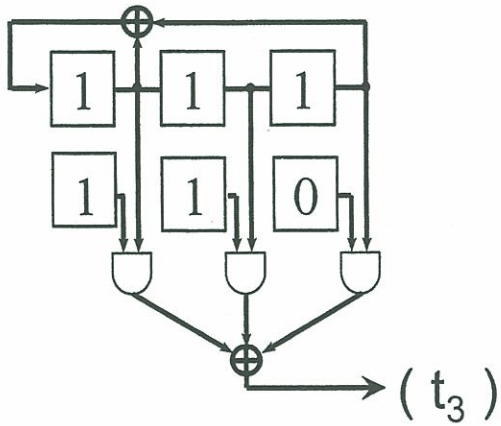

SLIDE 44

Short PN Codes

- $P_I(x) = x^{15} + x^{13} + x^9 + x^8 + x^7 + x^5 + 1$
  for the in-phase (I) sequence.

- $P_Q(x) = x^{15} + x^{12} + x^{11} + x^{10} + x^6 + x^5 + x^4 + x^3 + 1$
  for the quadrature-phase (Q) sequence.

SLIDE 46

Summary

- Long code is used by the base-station to scramble the user data
- Long code is used by the mobile-station to channelize the user on the reverse link
- Short codes are used by the base-station to identify the base-stations and for quadrature spreading of the data
- Short codes are used by the mobile-stations for quadrature spreading of data

Section 2 - Codes for Channelization



END OF SECTION