A Beginners Guide to Repeaters, Questions and Answers...

By Kevin K. Custer W3KKC (AKA The Repeater Builder)

For the sake of the complete beginner I'm going to cover all the parts, even those which may seem obvious.

What is a Repeater?

A duplex repeater, in concept, is not really a complicated device. It's a 'duplexed' two-way radio set that listens on one frequency, then re-transmits what it hears on another; at exactly the same time. These systems are usually located in places of high elevation (on mountains and tall buildings) and are equipped with large - efficient antennas, extremely low loss feedlines, and a transmitter and receiver that is very durable and rated for continuous duty. The end result? People using a repeater get much greater range from their radio equipment than would be possible talking simplex. This is how an individual with a portable walkie-talkie (handheld) transceiver can communicate with people many miles away with good clarity. A ham (Amateur) repeater is often times referred to as "a machine" or "the machine". Repeaters are used in Commercial (Business)Communications, Emergency Communications (either by 'hams' or by Federal or Local Government agencies), and even Pleasure Communications. These machines might have multiple sources of power, including batteries for when commercial power is lost. Repeaters can be built that are extremely power efficient, and may run exclusively from batteries; recharged by solar, wind or water power.

What is Simplex?

Simplex is point to point communications without the use of a repeater. Simplex operation utilizes the same frequency for receive and transmit. I.E. Portable to Portable or Mobile to Mobile. Motorola calls Simplex operation 'Talk Around" because you are talking around the repeater, not through it.

There are such things as Simplex Repeaters. These machines listen on the frequency for activity, when it recognizes something it will begin to record that activity for a pre-determined time; usually 1 minute. After the activity ceases or the time has expired, the unit will repeat what it has recorded. This method of communications is somewhat cumbersome over a conventional repeater; because you are forced to listen to what you said earlier in time; however it should not be discounted as these types of systems can be very beneficial.

What is Duplex?

The simple explanation of full duplex operation is like the telephone, where both people can talk at the same time. In contrast, a pair of handhelds operate in half-duplex mode because only one person can talk at a time. Since the 'repeater' listens and talks at the same time in relaying your message, it operates in full duplex mode. Here is another explanation.

How does a Repeater work?
At first glance, a repeater might appear complicated, but if we take it apart, piece by piece, it's really not really so difficult to understand. A basic repeater consists of several individual pieces that, when connected, form a functional system. Here's a simple block diagram of a repeater:

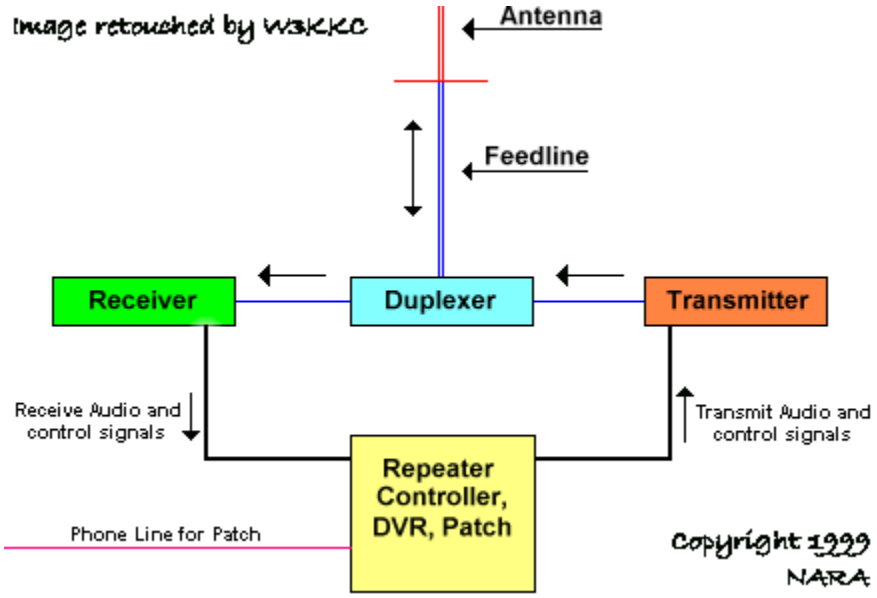

Antenna -
Most repeaters likely use one antenna. The antenna serves both the transmit and receive RF (Radio Frequency) signals that are going in to and out of the repeater. It's generally a high performance, durable, and rather efficient antenna located as high on a tower or structure as we can get it. Antenna systems of this type can easily cost $500 or more.

Feedline -
The feedline on most repeaters isn't just a piece of standard coax cable, it's what's called Hardline. This stuff is more like a pipe with a center conductor than a cable. It's hard to work with and expensive. So why do we use it? Performance! The signal loss is much lower in hardline than in standard cable, so more power gets to the antenna and weaker signals can be received. Remember, the signal at a repeater site doesn't just travel a few feet to an antenna like in a mobile rig. It may go hundreds of feet up the tower to the antenna. Just for fun check out the specs on a roll of coax some time and see how many dB of loss you'll get from 200 feet of cable. Hardline also tends to be more durable than standard cable, which increases reliability and helps us minimize tower climbs to replace it.

Duplexer -
This device serves a critical role in a repeater. To make a long story short, the duplexer separates and isolates the incoming signal from the outgoing and vice versa. Even though the repeaters input and output frequencies are different, the duplexer is still needed. Why? Have you ever been in a place where there's lots of RF activity, and noticed the

receive performance of your radio degrades to some degree? This is called de-sense, and it's a bad thing on a repeater. The receiver goes deaf or gets desensitized from the strong RF signals being radiated in its vicinity and confused about which signal it should receive. The result is poor receive quality, or in extreme cases, lack of receive capability. Keep in mind that in this example, the radios are picking up radiated power from one another and that's enough to cause trouble. Now imagine how much trouble there will be if you not only have the transmitter and receiver close together, but connect them to the same antenna! Transmitting only a few hundred kHz away in frequency would blow away the input to the receiver if the equipment was simply connected together with a Tee. That's where the duplexer comes in; it prevents the receiver and transmitter from 'hearing' one another by the isolation it provides.

A duplexer is a device that is referred to by several different names like cavities or cans. A duplexer has the shape of tall canisters and is designed to pass a very narrow range of frequencies and to reject others. There is some loss to the system because of the duplexer, however, the advantage of being able to use a single antenna usually outweigh the drawbacks.

Receiver -
Receives the incoming signal. This receiver is generally a very sensitive and selective one which helps weaker stations to be heard better by the repeater. It's also where CTCSS (Continuous Tone Coded Squelch System) or "PL" decoding takes place. More on this later.

Transmitter -
Most machines have a transmitter composed of an 'exciter' and a power amplifier. The exciter modulates the audio at the proper transmit frequency, and the power amplifier simply boosts its level so the signal will travel further.

The "Station" -
The term "Station" is used to describe a stationary two way radio set; which includes the transmitter, receiver and sometimes the control circuitry. A 'Repeater Station' is a station designed to be used as a duplex repeater.

Controller -
This is the brain of the repeater. It handles station identification (through either CW or voice), activates the transmitter at the appropriate times, controls the autopatch, and sometimes does many other things. Some machines also have a DVR (Digital Voice Recorder) for announcements and messages. The controller is a little computer that's programmed and optimized to control a repeater. The various models of controllers have different useful features like speed-dial for phone patches, a voice clock, facilities to control a remote base or linking, etc. The controller gives the repeater its 'personality'. Whenever you're using a repeater, you're interacting with its controller.

What is a Phone Patch or Autopatch? AKA "Patch"
Many repeaters have a feature that allows you to place a telephone call from your radio.

Phone calls are generally restricted to the local calling area of the repeater to avoid long distance charges to the repeater's sponsors. If in doubt, ask if the repeater has an *open patch* and how to access it. When using the patch it is common courtesy to announce your intentions, e.g. " This is N3XZY on the patch". This may help to prevent anyone from keying up while you are trying to use the function.

DVR -
A DVR is a Digital Voice Recorder, it modern terms "voice mail".

Repeater Operation -
Operating using a repeater isn't difficult. A good source of info is the ARRL Repeater Directory. It's an inexpensive book with repeater listings all over the US. It contains frequency, offset and whether the repeater is + or - in shift, and whether or not it requires a PL tone.

What is Offset?
In order to listen and transmit at the same time, repeaters use two different frequencies. On the 2 meter ham band these frequencies are 600 kc's (or 600 kilohertz) apart. As a general rule, if the output frequency (transmit) of the repeater is below 147 Mhz then the input frequency (listening) is 600 kilohertz lower. This is referred to as a negative offset. If the output is 147 Mhz or above then the input is 600 kilohertz above. This is referred to as a positive offset.

Virtually all ham radios sold today set the offset once you have chosen the operating frequency. As an example one repeater output is 145.270 Mhz. The input, or the frequency it listens on is 144.670 Mhz (600 kilohertz below). If you have your radio tuned to 145.270 Mhz, when you push the PTT switch (Push-To-Talk) your radio automatically transmits on 144.670 Mhz. When you release the PTT to listen, the radio reverts back to 145.270 Mhz to listen on the repeater's output frequency. Note: There are exceptions to the rule so check local repeater listings.

Why do Repeaters use an Offset?
To use a repeater a user station must use a different transmit frequency than receive frequency. This is a *form of duplex*, or two frequency operation. It is known as *half-duplex as you do not receive and transmit at the same time but normally use the push-to-talk button on your microphone to switch between the two.*

Most repeater installations use the same antenna for transmit and receive. Without having an offset of 600 kHz the repeater would simply hear itself when it was transmitting on the same frequency it was listening on. Even with the offset, the two frequencies are close enough that some isolation is required. Again, this isolation is afforded by the Duplexer.

What is CTCSS or a PL Tone?
PL, an acronym for Private Line, is Motorola's proprietary name for a communications industry signaling scheme call the Continuous Tone Coded Squelch System, or CTCSS. It is used to prevent a repeater from responding to unwanted signals or interference. Tone

Squelch is an electronic means of allowing a repeater to respond only to stations that encode or send the proper tone. Any station may be set up to transmit this unique low frequency tone that allows the repeater to operate. If a repeater is "In PL" that means it requires a CTCSS tone to activate the repeater. In days of old, repeaters that used PL were considered to be closed or private. This is no longer the case as PL operation has become more the rule instead of the exception. CTCSS is often referred to as PL, Channel Guard, Call Guard, Quiet Channel, and others.

How do you call someone on an Amateur Repeater?
First, listen to make sure that the repeater is not already in use. When you are satisfied that the repeater is not in use, begin with the callsign of the station you are trying to contact followed by your callsign. e.g. " W3ABC *this is* N3XYZ". If you don't establish contact with the station you are looking for, wait a minute or two and repeat your call.

If you are just announcing your presence on the repeater it is helpful to others that may be listening if you identify the repeater you are using. e.g. " This is N3XYZ listening on 6-2-5". This allows people that are listening on radios that scan several repeaters to identify which repeater you are using.

If the repeater you are using is a busy repeater you may consider moving to a simplex frequency (transmit and receive on the same frequency), once you have made contact with the station you were calling. Repeaters are designed to facilitate communications between stations that normally wouldn't be able to communicate because of terrain or power limitations. If you can maintain your conversation without using the repeater, going "simplex" will leave the repeater free for other stations to use.

Repeater Etiquette
The first and most important rule is LISTEN FIRST. Nothing is more annoying than someone that "keys up" in the middle of another conversation without first checking to make sure the repeater is free. If the repeater is in use, wait for a pause in the conversation and simply announce your callsign and wait for one of the other stations to acknowledge your call.

When you are using the repeater leave a couple of seconds between exchanges to allow other stations to join in or make a quick call. Most repeaters have a "Courtesy Tone" that will help in determining how long to pause. The courtesy tone serves two purposes. Repeaters have a time out function that will shut down the transmitter if the repeater is held on for a preset length of time (normally three or four minutes). This ensures that if someone's transmitter is stuck on for any reason, it won't hold the repeater's transmitter on indefinitely.

When a ham is talking and releases the push-to-talk switch on their radio, the controller in the repeater detects the loss of carrier and resets the time-out timer. When the timer is reset, the repeater sends out the courtesy tone. If you wait until you hear this beep (normally a couple of seconds), before you respond, you can be sure that you are pausing a suitable length of time. After you hear the beep, the repeater's transmitter will stay on

for a few more seconds before turning off. This is referred to as the "tail". The length of the tail will vary from repeater to repeater but the average is about 2 or 3 seconds. You don't have to wait for the "tail to drop" before keying up again, but you should make sure that you hear the courtesy tone before going ahead.

Note: If you don't wait for the beep the time-out timer to may not reset. If you time-out the repeater, hams that are listening may expect a free coffee from the offender.

What is Doubling?
When two stations try to talk at the same time the signals mix in the repeater's receiver and results in a buzzing sound or squeal. When you are involved in a roundtable discussion with several other stations it is always best to pass off to a specific person rather than leave it up it the air. e.g. "W3ABC to take it, this is N3XYZ" or "Do you have any comments Fred?, this is N3XYZ". Failing to do so is an invitation to chaos and confusion.

It is for this very reason that when groups hold scheduled Nets (network of hams meeting on air at a predetermined time), they assign a Net Control. The Net Controls job is to make sure there is an orderly exchange and that all stations get a chance to speak. Listen to a local net and you will get an idea of the format and how the Net Control juggles the various stations and traffic. It's a job almost anyone can handle, but as you will discover, some are much better at it than others. A well run net is both informative and entertaining!

What is a Control Operator?
The Part 97 of the FCC Rules requires all stations in the Amateur Service that are capable of operating unattended must be monitored for proper operation while in the unattended mode. This monitoring function is accomplished by a control operator. The Control Op can be the licensee of the station or anyone he or she chooses. In many cases, he or she also ends up being the person that answers questions about the repeater.

What is White Noise?
White noise is a term used to describe a spectrum of broad band noise generated in a receiver's detector and sampled to control the receiver's squelch. When you open the squelch control and hear the rushing noise from the speaker, this is white noise.

I hope this article has explained the Repeater in enough detail that you understand what it is and how to use it. If there is any part of this article that seems vague or confusing, please write me and I'll do my best to explain it better....

Email Kevin : kuggie at kuggie dot com

HTML Copyright © September 6 2003, Kevin K. Custer W3KKC
All Rights Reserved.

Page last updated 28-September-2003 by W3KKC
The information presented in this web site and on these web pages is © Copyrighted 1995 - current by Kevin Custer W3KKC and multiple originating authors.