Emona DATEx
Lab Manual

Volume 2
Further Experiments in Modern Analog & Digital Telecommunications For NI™ ELVIS I and II

Barry Duncan



Emona DATEx
Lab Manual

Volume 2
Further Experiments in Modern Analog & Digital Telecommunications For NI™ ELVIS I and II

Barry Duncan



Emona DATEx Lab Manual for NI™ ELVIS I and II
Volume 2 -
Further Experiments in Modern Analog and Digital Telecommunications.

Author: Barry Duncan
Technical editor: Carlo Manfredini

Issue Number: Vol2 issue 1.1

Published by:

Emona Instruments Pty Ltd,
78 Parramatta Road
Camperdown NSW 2050
AUSTRALIA.

web: www.emona-tims.com
telephone: +61-2-9519-3933
fax: +61-2-9550-1378

Copyright © 2008 - 2011 Emona Instruments Pty Ltd and its related entities. All rights reserved. No part of this publication may be reproduced, translated, adapted, modified, edited or distributed in any form or by any means, including any network or Web distribution or broadcast for distance learning, or stored in any database or in any network retrieval system, without the prior written consent of Emona Instruments Pty Ltd.

For licensing information, please contact Emona Instruments Pty Ltd.
DATEx™ is a trademark of Emona TIMS Pty Ltd.

LabVIEW™, National Instruments™, NI™, NI ELVIS™, and NI-DAQ™ are trademarks of National Instruments Corporation. Product and company names mentioned herein are trademarks or trade names of their respective companies.

Printed in Australia

Contents

Introduction ..... i – iv

1 - AM (method 2) and product detection of AM signals ..... Expt 1 - 1

2 - Noise in AM communications ..... Expt 2 - 1

3 - PCM and time division multiplexing (TDM) ..... Expt 3 - 1

4 - An introduction to Armstrong's modulator ..... Expt 4 - 1

5 - Phase division modulation and demodulation ..... Expt 5 - 1

6 - Pulse-width modulation and demodulation ..... Expt 6 - 1

7 - Message translation and inversion ..... Expt 7 - 1

8 - Carrier acquisition using the phase-locked loop ..... Expt 8 - 1

9 - Signal-to-noise ratio and eye diagrams ..... Expt 9 - 1

10 - Pulse code modulation and signal-to-noise distortion ratio (SNDR) Expt 10 - 1

11 - ASK demodulation using product detection ..... Expt 11 - 1

12 - FSK generation (switching method) and demodulation ..... Expt 12 - 1

13 - Principles of Gaussian FSK (GFSK) ..... Expt 13 - 1

14 - PN sequence spectra and noise generation ..... Expt 14 - 1

15 - Line coding and bit-clock regeneration ..... Expt 15 – 1

16 - Delta modulation and demodulation ..... Expt 16 - 1

17 – Delta-sigma modulation and demodulation ..... Expt 17 – 1

18 – FM Generation using the harmonic multiplier method ..... Expt 18 - 1

Introduction – Volume 2

The ETT-202 DATEx ™ Lab Manual Volume 2 - Overview

The ETT-202 Lab Manual Volume Two covers a broad range of introductory digital and analog telecommunications topics through a series of 16 hands-on laboratory experiments, which build on the theory and topics covered in the Volume One Lab Manual. Each experiment is written to support the theoretical concepts introduced in the class work of a first course in modern telecommunications.

Each DATEx experiment presents an interesting, hands-on learning experience for the student. In each experiment the student is challenged to build, measure and consider: there are no "instant" or "cookbook-style" experiments. DATEx is actually a true engineering modeling system where students see that the block diagrams so common in their textbooks represent real functioning systems.

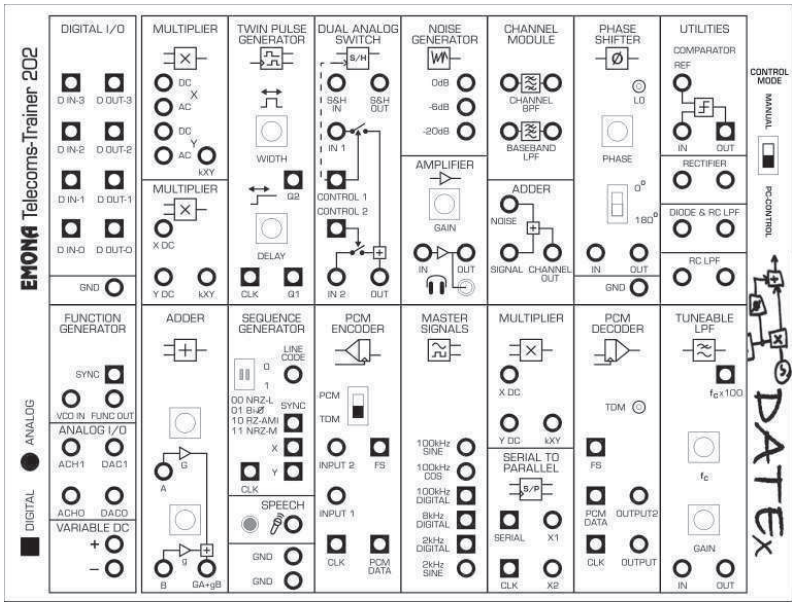

The Emona DATEx Add-in Module has a collection of blocks (called modules) that are patched together to implement dozens of telecommunications experiments.

Equipment Required

Experiments make use of the Emona DATEx telecommunications trainer kit together with the NI ELVIS I or II platform and NI LabVIEW running on a PC. The functionality and range of the virtual instrumentation available depends on the NI DAQ that is coupled with NI ELVIS I platform. ELVIS II has all necessary interfacing circuitry built into it.

Refer to the ETT-202 DATEx USER MANUAL for further details, as well as information on the installation and use of the DATEx/NI ELVIS experiment system.

Student Academic Level

Experiments in this volume have been prepared for students with only a basic knowledge of mathematics and a limited background in physics and electricity.

Students with a higher level of competence in mathematics will also gain a deeper understanding of telecommunications theory by using the DATEx system. Due to the engineering "modeling" nature of the DATEx system, they will be able to investigate more complex issues, carry out additional measurements and then contrast their findings to their theoretical understanding and mathematical analysis.

Didactic philosophy behind the ETT-202 DATEx™ System – Emona TIMS™ and the "Block Diagram" approach

The Emona DATEx telecommunications trainer draws on a well established experimental methodology that brings to life the "universal language" of telecommunications, the BLOCK DIAGRAM. Originally developed in the 1970's by Tim Hooper, a senior lecturer in telecommunications at The University of New South Wales, Australia, and further developed by Emona Instruments, Emona TIMS™, or "Telecommunications Instructional Modeling System", is used by thousands of students around the world, **to implement practically any form of modulation or coding**.

Block Diagrams

Block diagrams are used to explain the principle of operation of electronic systems (like a radio transmitter for example) without worrying about how the circuit works. Each block represents a part of the circuit that performs a separate task and is named according to what it does. Examples of common blocks in communications equipment include the *adder*, *multiplier, oscillator*, and so on.

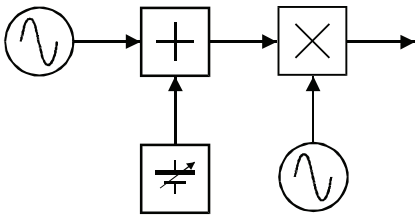

A typical telecom's BLOCK DIAGRAM

The TIMS™ and hence DATEx™ approach to implementing telecommunications experiments through realizing BLOCK DAIAGRAMS has the following benefits in the educational environment:

- Students gain practical experience with true mathematical modeling hardware, designed specifically for implementing telecommunications theory.
- Students actually build each experiment stage-by-stage, in an engineering manner, by following the BLOCK DIAGRAM.
- Students are free to try "what-if" scenarios to validate their understanding of the theory being investigated, by viewing real, real-time electrical signals.
- DATEx is designed to allow students to make mistakes, hence students will learn from their hands-on experiences as they investigate their findings.

One-to-One Relationship

The figure on the right illustrates the one-to-one relationship between each block of the BLOCK DIAGRAM and the independent functional circuit blocks of the DATEx trainer board.

The functional blocks of the DATEx board are used and re-used in experiments, just as blocks of the block diagram reappear in many different implementations.

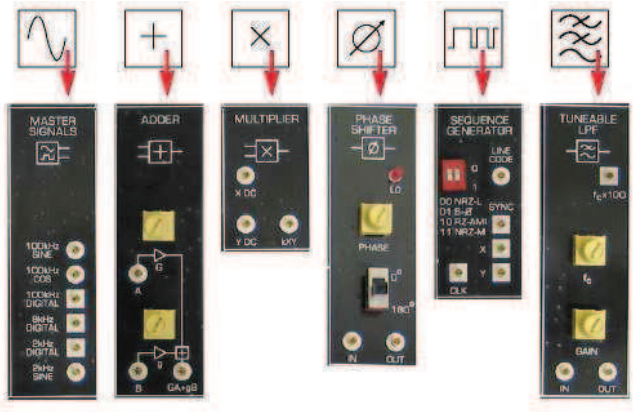

Examples of DATEx ™ functional blocks

NI LabVIEW™ and DATEx™
The Emona DATEx add-in module is fully integrated with the NI ELVIS platform and NI LabVIEW environment. All DATEx™ knobs and switches can be varied either manually or under the control NI LabVIEW VIs.

DATEx™ VIs are provided in the DATEx kit so that the student has the ability further enhance the experiment capabilities of the DATEx hardware, by utilizing the resources of NI LabVIEW and even integration with NI's wide range of RF products.

Guidelines for Using the Volume 2 Lab Manual

The experiments in this volume build on the topics introduced in the Volume 1 Lab Manual. The experiments in this volume have been prepared for students with only a basic knowledge of mathematics. However, due to the engineering "modeling" nature of the DATEx add-in module, students with a higher level of competence in mathematics will equally gain a deeper understanding of telecommunications theory by carrying out these experiments.

Chapters can be covered in any order, however, **it is imperative that all students complete the first four chapters of the Volume 1 Lab Manual before proceeding to the Volume 2 experiments**. The first chapters of the Volume 1 Lab Manual provide a solid introduction to the NI ELVIS platform and the use of NI LabVIEW virtual instrumentation.

In order to make the student's learning experience more memorable, the student is usually able to both view signals on the NI ELVIS oscilloscope and then listen to their own voice undergoing the modulation or coding being investigated.

Making Mistakes and Mis-wiring
An important factor which makes the learning experience more valuable for the student is that the student is allowed to make wiring mistakes. DATEx inputs and outputs can be connected in any combination, without causing damage. As the student builds the experiment, they need to make constant observations, adjustments and corrections. If signals are not as expected then the student needs to make a decision as to whether the correction required is an adjustment or an incorrectly placed patching wire.

Flexibility and Modification of the Experiments and Topics
Since the ETT-202 DATEx Trainer is a true modeling system, the instructor has the freedom to modify existing experiments or even create completely new experiments to convey new and course specific concepts to students.

Name: _____

Class: _____

1 - Amplitude modulation (method 2) and product detection of AM signals

Experiment 1 – Amplitude modulation (method 2) and product detection of AM signals

Preliminary discussion

Amplitude modulation (method 2)

The Class C amplifier is a popular circuit for the commercial implementation of high level amplitude modulation (that is, modulation at the final stage of the transmitter). The principle advantage of the Class C amplifier is its efficiency which can theoretically be as high as 90% though is a little less in practice.

When the Class C amplifier is operated at depths of modulation below 100%, the circuit's operation corresponds with the equation **AM = (DC + the message) × the carrier** and is implemented on the Emona DATEx using the block diagram in Figure 1 below.

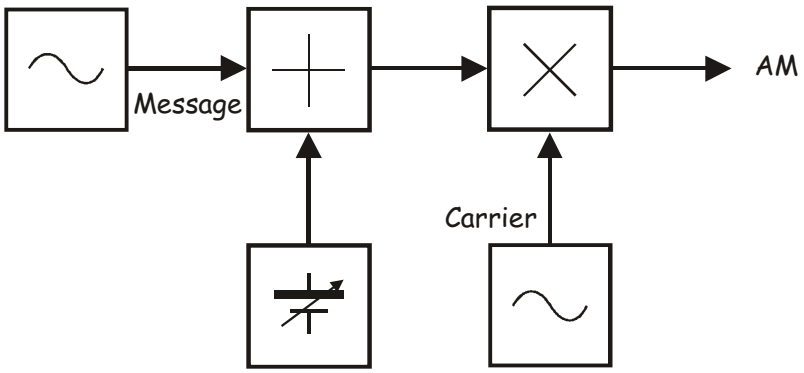

Figure 1

Using trigonomic expansion (not shown here), the equation above can be rewritten as:

AM = (the message × the carrier) + (the carrier)

You may recognise the first part of the equation as the mathematical model for DSBSC. That being the case, we can rewrite the equation as:

AM = DSBSC + the carrier

Usefully, this equation gives us an alternative method of implementing AM – generate a DSBSC signal then add the carrier to it afterwards. The block diagram for this is shown in Figure 2 below.

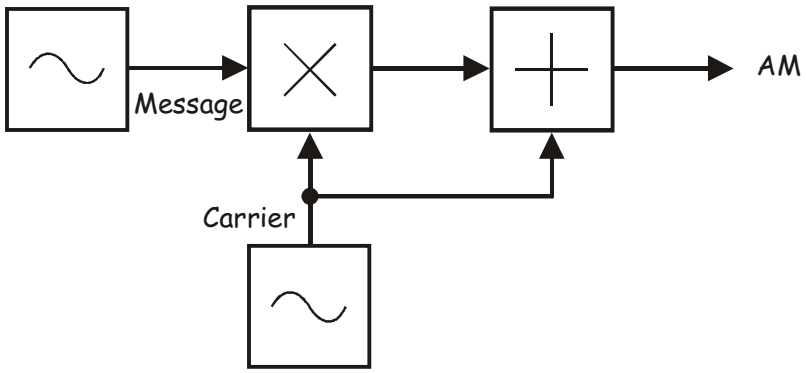

Figure 2

Importantly, the phase relationship between the carrier used to generate the DSBSC signal and the carrier that is added to it is crucial. They must be in phase for the resulting signal to be AM. While this isn't explicitly stated in the equations at the bottom of the previous page, this is because a phase shift of 0° can left off the equation and is implied (much like the way positive numbers are implied by omitting the sign).

What are the implications of any phase error between the two carriers? First, a signal shape is produced that only approximates AM. Importantly, the envelopes are no-longer copies of the original message and so the envelope detector cannot be used to recover it. Second, the modulation index (the "m") of the signal as determined using scope measurements is no-longer a valid figure for subsequent calculations of power distribution between the carrier and sidebands.

Product detection of AM signals

The envelope detector is a classic method of demodulating AM signals that is widely used. However, it may surprise you to learn that it's not the only method. Product detection (or, more appropriately, product demodulation) can also be used. Notes later in this experiment explain how.

The experiment
For this experiment you'll use the Emona DATEx to generate a DSBSC signal then add a carrier to it afterwards. However, this will not automatically turn the DSBSC signal into an AM signal. So, after adding the carrier, you'll make the necessary phase adjustments using the kiss test to do so.

After this, you'll use the product detector to recover the message from the AM signal demonstrating that its use is not restricted to demodulating DSBSC and SSBSC signals. Finally, you'll, demonstrate that it is possible to recover the message from over-modulated AM signals.

It should take you about 50 minutes to complete this experiment.

Pre-requisites:
Experiments 1, 2 & 3 (Vol. 1): Intros to the NI ELVIS II, the Emona DATEx and SFP control
Experiment 5 (Vol. 1): Amplitude modulation (optional)
Experiment 6 (Vol. 1): DSBSC modulation
Experiment 7 (Vol. 1): Observations of AM & DSBSC signals in the frequency domain (desirable)
Experiment 9 (Vol. 1): DSBSC demodulation

Equipment

- Personal computer with appropriate software installed
- NI ELVIS II plus USB cable and power pack
- Emona DATEx experimental add-in module
- Two BNC to 2mm banana-plug leads
- Assorted 2mm banana-plug patch leads

Procedure

Part A - Generating a DSBSC signal

To experiment with generating an AM signal using the second method, you'll need a DSBSC signal. The first part of this experiment gets you to set one up.

1. Ensure that the NI ELVIS II power switch at the back of the unit is off.

2. Carefully plug the Emona DATEx experimental add-in module into the NI ELVIS II.

3. Set the *Control Mode* switch on the DATEx module (top right corner) to *PC Control*.

4. Connect the NI ELVIS II to the PC using the USB cable.

   Note: This may already have been done for you.

5. Turn on the NI ELVIS II power switch at the rear of the unit then turn on its *Prototyping Board Power* switch at the top right corner near the power indicator.

6. Turn on the PC and let it boot-up.

7. Launch the NI ELVISmx software.

8. Connect the set-up shown in Figure 3 below.

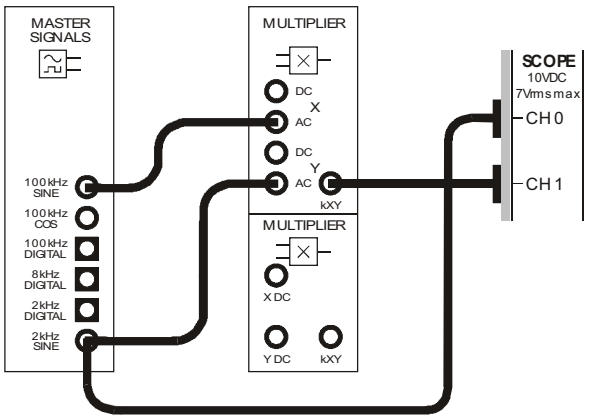

Figure 3

 © 2008 Emona Instruments

The set-up in Figure 3 can be represented by the block diagram in Figure 4 below. It uses a 2kHz sinewave message to DSBSC modulate 100kHz sinewave carrier.

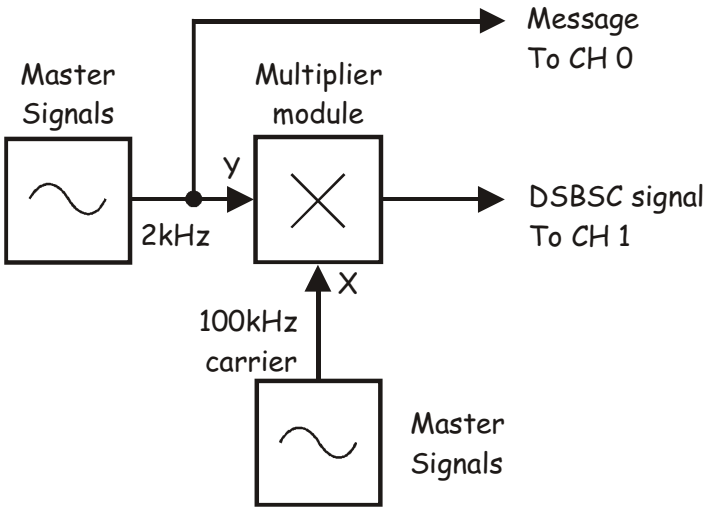

Figure 4

9. Launch and run the NI ELVIS II Oscilloscope.

10. Adjust the scope to view two or so cycles of the message and the DSBSC signal. Essential scope settings include:

    - *Coupling* for both channels to *AC*
    - *Trigger Type* to *Edge*
    - *Trigger Source* to *CH 0*

11. Verify that the Multiplier module's output is a DSBSC signal by checking that alternating halves of its envelope form a copy of the message.



Ask the instructor to check your work before continuing.

© 2008 Emona Instruments

Part B – Adding the carrier to the DSBSC signal

The next part of the experiment gets you to add the carrier to the DSBSC signal using the Adder module. That said, the signal on the Adder module's output is unlikely to be AM for reasons that are explained on the next page.

12. Modify the set-up as shown in Figure 5 below.

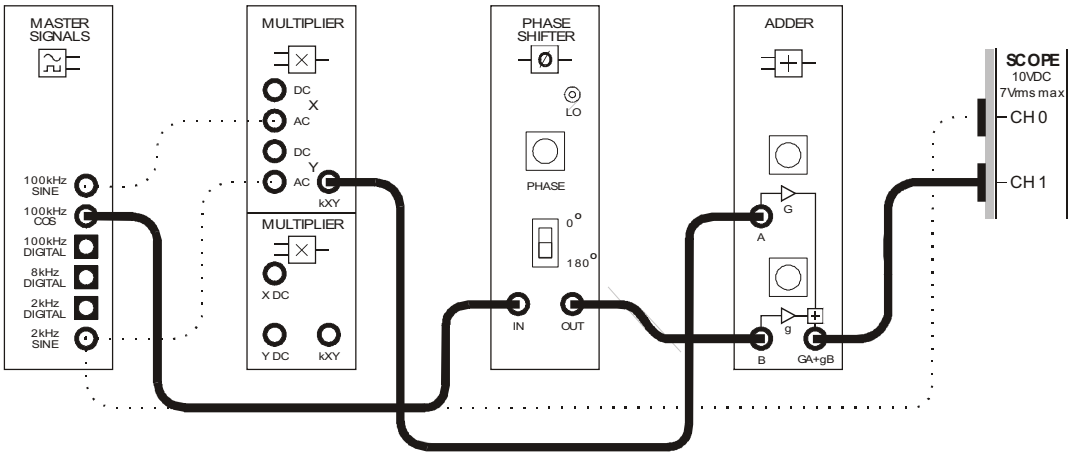

Figure 5

This set-up can be represented by the block diagram in Figure 6 below.

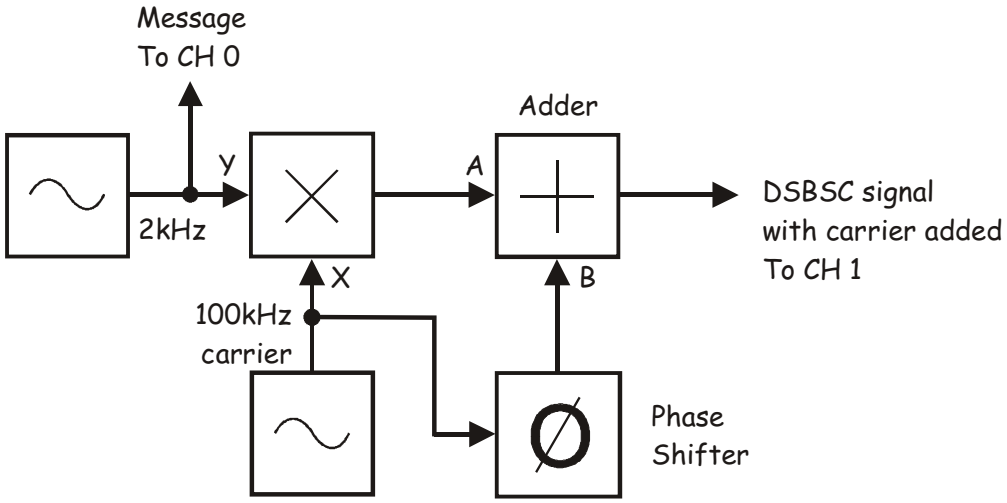

Figure 6

 © 2008 Emona Instruments

Notice that the Master Signals module's *100kHz COS* output is used for the DSBSC signal's added carrier. Notice also, that the Master Signals module's *100kHz COS* output is connected to the Adder module's *B* input via the Phase Shifter module. There are very good reasons for this.

Recall that the phase of the carrier added to the DSBSC signal must be identical to that of the carrier used to generate the DSBSC signal. Figure 2 in the preliminary discussion suggests that the two carriers automatically satisfy this requirement as they're taken from a common source. However, the carriers take different paths to the Adder - one directly and the other indirectly via the multiplier. Moreover, the Adder can introduce a small and unknown (but stable) phase shift. As a consequence, there is no guarantee that the DSBSC signal's suppressed carrier and the one to be inserted are in phase as required. So, the potential phase error between the carriers is modelled using the Master Signals module's *100kHz COS* output instead of the *100kHz SINE* output used to generate the DSBSC signal.

To correct for potential phase errors between the carriers, a phase shift circuit at the carrier's input to the Adder may be necessary. This is modelled in our arrangement using the Phase Shifter module. Clearly a process of obtaining the correct phase alignment between the carriers is necessary and this is dealt with in Part C shortly.

13. Launch the DATEx soft front-panel (SFP) and check that you have soft control over the DATEx board.

14. Locate the Adder module on the DATEx SFP and set its soft *G* and *g* controls to about the middle of their travel (the exact position isn't critical at this stage).

15. Locate the Phase Shifter module on the DATEx SFP and set its soft *Phase Change* control to the *0°* position.

16. Set the Phase Shifter module's soft *Phase Adjust* control to about the middle of its travel.

17. Observe the Adder module's output using the scope.

    Note: You'll notice that the signal doesn't look like either DSBSC or AM.

    Question 1
    Given the frequencies of the signals involved in the implementation of Figure 6, what are the frequencies of the three significant sinewaves on the Adder module's output?

    ---

18. Suspend the scope's operation by clicking on its *Stop* control once.

    Note: The scope's display should freeze and its hardware has been deactivated. This is a necessary step as the scope and signal analyzer share hardware resources and so they cannot be operated simultaneously.

19. Launch and run the NI ELVIS II Dynamic Signal Analyzer VI.

20. Adjust the signal analyzer's controls as follows:

Input Settings

- *Source Channel* to *SCOPE CH 1*
- Voltage Range to ±10V

FFT Settings

- *Frequency Span* to *150,000*
- *Resolution* to *400*
- *Window* to *7 Term B-Harris*

Averaging

- *Mode* to *RMS*
- *Weighting* to *Exponential*
- *# of Averages* to *3*

Trigger Settings

- *Type* to *Edge*

Frequency Display

- *Units* to *Linear*
- *Mode* to *RMS*
- *Scale* to *Auto*
- *Cursors On* box unchecked (for now)

21. Activate the signal analyzer's cursors and use *C1* to verify that your answer to Question 1 is correct.

Question 2
What analog modulation scheme is the spectral composition of the Adder module's output identical to (ignoring the magnitude of the sinewaves)?

_____

Question 3
Following on from Question 2, why doesn't the Adder module's output look like this type of modulation in the time domain?

_____

_____



Ask the instructor to check your work before continuing.

 © 2008 Emona Instruments

Part C – Adjusting the set-up to produce an AM signal

For this set-up to produce AM, the two carriers must be phase-aligned. The next part of this experiment gets you to do this using a very practical method. However, it needs a little explanation first.

When a carrier is amplitude modulated by a single sinewave for the message, the result is a signal with the shape shown in Figure 7a and the spectral composition shown in Figure 7b.

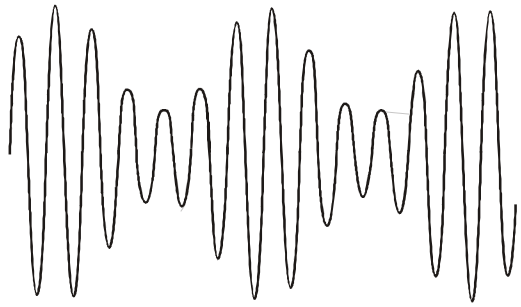

Figure 7a

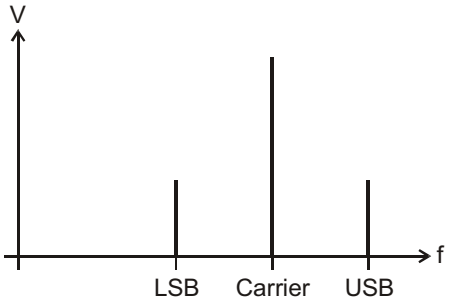

Figure 7b

So how do the frequency components in Figure 7b combine to form the signal we see in Figure 7a (and on a scope)? To answer this question, we need the phasor representation of the AM signal in Figure 7. This is shown in Figure 8 below.

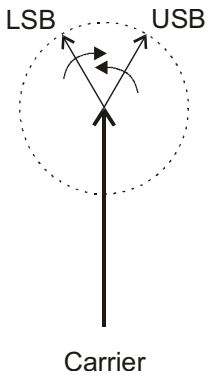

Figure 8

Recall that all phasors are said to rotate anti-clockwise. But, if the position of the carrier's phasor is frozen, we see something interesting with the sidebands. The upper sideband's phasor continues to rotate anti-clockwise about the carrier's tip because it's a higher frequency. At the same time, the lower sideband's phasor rotates clockwise because it's a lower frequency.

All of the AM signal's instantaneous voltages are a value that is the vector sum of the three phasors' voltages at the corresponding instant. This is demonstrated in Figure 9 below at some key points of the AM signal.

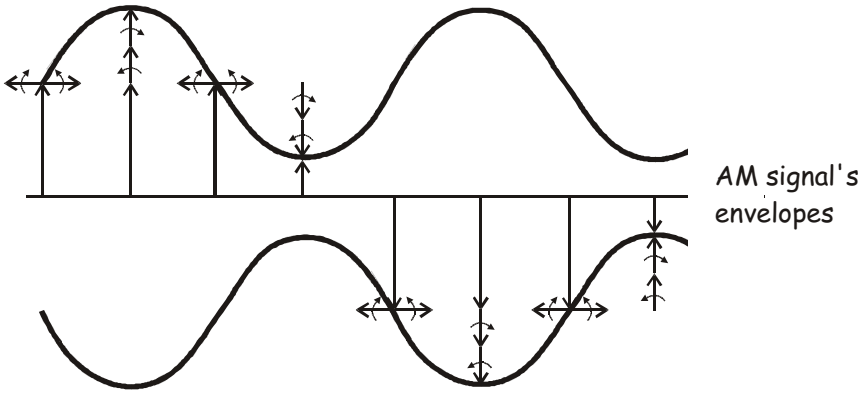

Figure 9

Now, when an AM signal's modulation index is 1 (or 100%), its sidebands have a combined amplitude equal to the carrier's amplitude. This produces the AM signal shown in Figure 10 where opposing envelopes are said to "kiss".

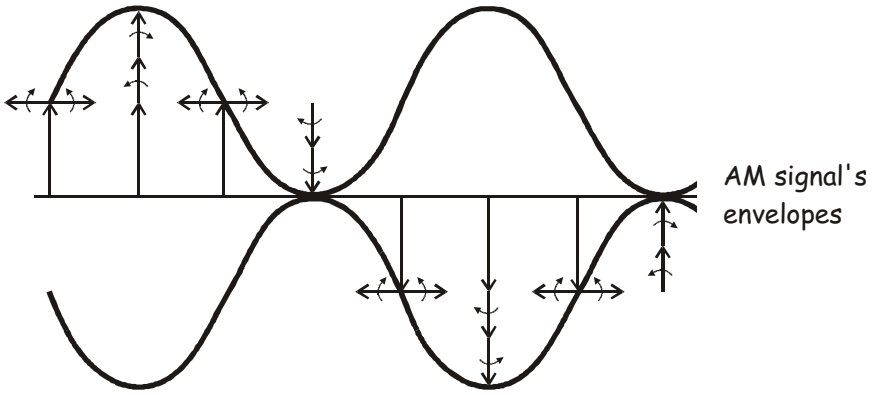

Figure 10

Importantly, when a DSBSC signal has a carrier introduced to it after generation (as we have done in here) this envelope kiss is only possible for two conditions. First, the amplitude of the introduced carrier must be equal to the combined amplitude of the sidebands (as mentioned above). And second, the phase of the introduced carrier must be identical to the phase of the carrier used to generate the DSBSC signal in the first instance.

This gives us a method for aligning the phase of the two carriers – it must pass the kiss test.

22. Close the signal analyzer's VI.

23. Restart the scope's VI.

24. Disconnect the patch lead to the Adder module's *A* input.

    Note: This removes the DSBSC signal from the Adder module's output.

25. Adjust the Adder module's soft *g* control for an output of 4Vp-p.

    Note: Remember, the Adder module's output is observed on the scope's Channel 1 input.

26. Reconnect the patch lead to the Adder module's *A* input.

27. Disconnect the patch lead to the Adder module's *B* input.

    Note: This removes the added carrier from the Adder module's output.

28. Adjust the Adder module's soft *G* control for an output of 4Vp-p.

29. Reconnect the patch lead to the Adder module's *B* input.

The amplitude of the introduced carrier and the combined amplitude of the sidebands are now the same.

30. Carefully adjust the Phase Shifter module's soft *Phase Adjust* control to obtain the required envelope kiss of the Adder module's output signal.

    Question 4
    Once envelope kiss is achieved, what's the phase relationship between the carrier used to generate the DSBSC signal and the carrier that has been added to it?

    _____

    _____

31. To verify your answer to Question 4, modify the scope's connections to the circuit as shown in Figure 11 on the next page.

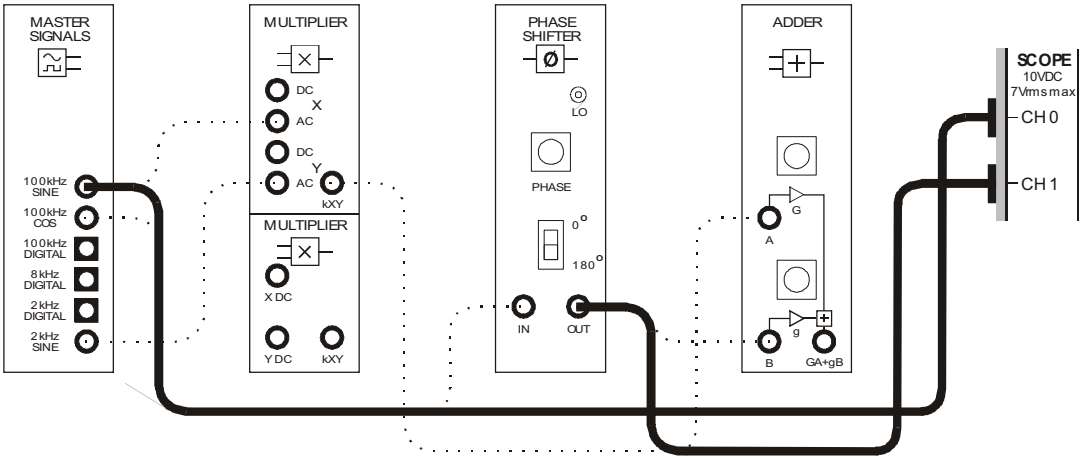

Figure 11

The new scope connections can be shown using the block diagram in Figure 12 below.

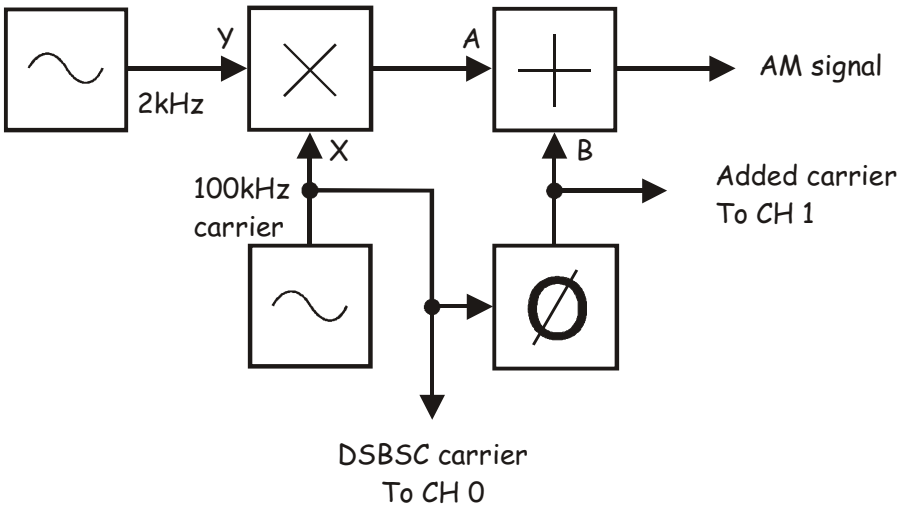

Figure 12

32. Adjust the scope's Timebase control to view two or so cycles of the two carriers.

Ask the instructor to check your work before continuing.

Part D – Product detection of AM signals

To understand how a product detector can be used to demodulate AM signals, let's revisit its operation. As the product detector's name implies, its output is the multiplication of its inputs. When those inputs are an AM signal and a local carrier this process can be described mathematically as:

Product detector's output = AM signal × the local carrier

And, as an AM signal can be mathematically expressed as LSB + Carrier + USB, the product detector's output can be rewritten as:

Product detector's output = (LSB + carrier + USB) × the local carrier

If the message signal used to generate the AM signal is a simple sinewave, the upper and lower sidebands are a simple sinewaves also. The LSB is at a frequency equal to the carrier minus the message and the USB is at a frequency equal to the carrier plus the message. In other words, the expression directly above can be written as:

Prod. detector's output = [(carrier – message) + carrier + (carrier + message)] × the local carrier

Now, recall that when two pure sinewaves are multiplied together, the result gives two completely new sinewaves:

- One with a frequency equal to the sum of the two signals' frequencies
- One with a frequency equal to the difference between the two signals' frequencies

That being the case, multiplying the sinewaves in the expression directly above gives:

- Local carrier + carrier
- Local carrier - carrier
- Local carrier + (carrier + message)
- Local carrier + (carrier - message)
- Local carrier - (carrier + message) which simplifies to just the message
- Local carrier - (carrier - message) which also simplifies to just the message

Notice that two of the sinewaves are at the message frequency. In other words, the product detector can recover the message from AM signals as well as DSBSC and SSBSC signals. Importantly, provided the original and local carriers are the same frequency and phase, the two copies of the message that the product detector produces simply add together to form a single bigger copy of the message.

Naturally, we don't want the other non-message sinewaves that the product detector also produces. Recall that these are removed by passing the product detector's output through a low-pass filter.

The next part of this experiment lets you use product detection to recover the message from the AM signal that you have generated.

33. Modify the set-up as shown in Figure 13 below.

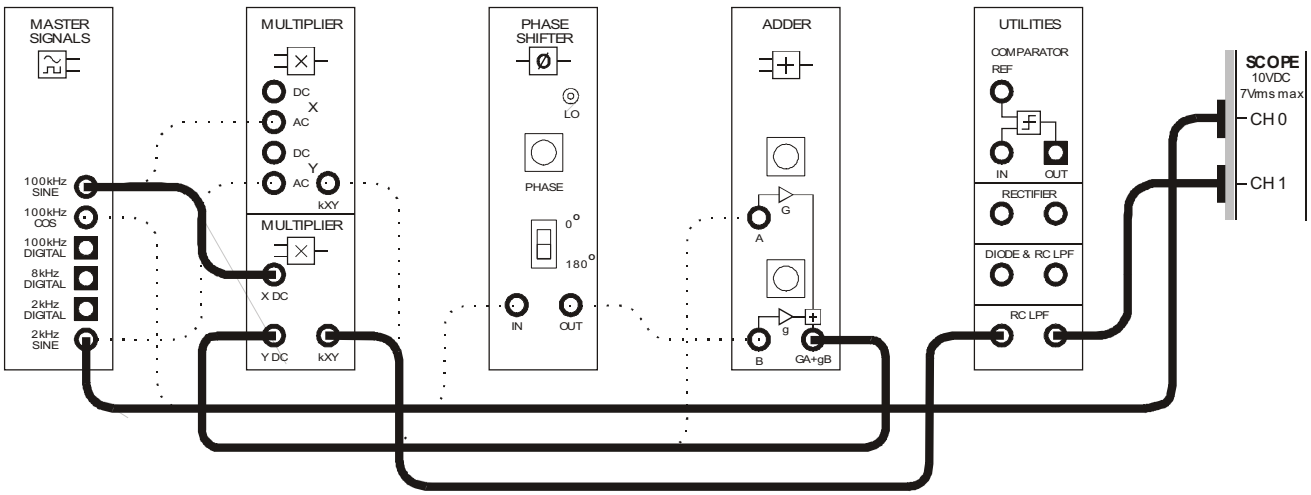

Figure 13

The additions to the set-up can be represented by the block diagram in Figure 14 below. The Multiplier module and the RC LPF implement a product detector with a local carrier that is "stolen" from the Master Signals module so that it's in phase with the AM signal's carrier (recall that carrier synchronisation is an important issue with product detection).

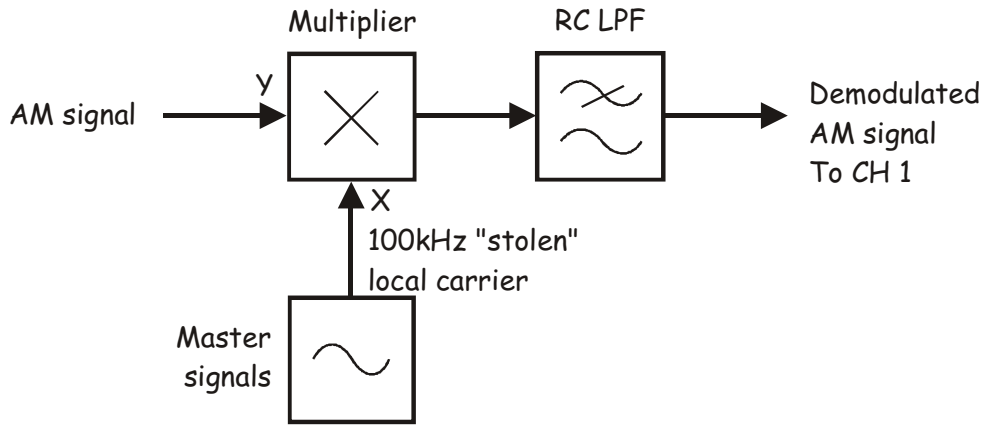

Figure 14

 © 2008 Emona Instruments

34. Compare the original message with the product detector's output.

Note 1: You will need to readjust the scope's *Timebase* control to an appropriate setting.

Note 2: Once connected correctly, the signal on the product detector's output should be a copy of the original message (notwithstanding phase shift).

Question 5
You have just seen that the product detector can demodulate AM signals as well as DSB and SSB signals. Why doesn't the AM signal's carrier interfere with the demodulation process?

Ask the instructor to check your work before continuing.

A common misconception about AM is that, once the signal is over-modulated, it's impossible to recover the message. However, when the AM signal is generated using an ideal or near-ideal modulator (like this set-up) this issue is only true for the envelope detector. That is, the product detector can recover the message from over-modulated AM signals. The final part of this experiment demonstrates this.

35. Connect the scope's Channel 0 to the AM modulator's output.

Note 1: This is the Adder module's output.

Note 2: Once done, you should observe the 100% modulated AM signal on the scope.

36. Adjust the scope as follows:

- *Trigger Source* to *CH 1*
- *Trigger Level* to *-1V*
- Channel 0 *Vertical Position* control to *2 V*
- Channel 1 *Vertical Position* control to *-2V*

37. Slowly increase the AM signal's modulation beyond 100% increasing the gain of the Adder module's *A* input (that is, by turning the Adder module's soft *G* control clockwise).

38. As you perform the previous step, watch the effect that the over-modulation has on the recovered AM signal.

    Note: There shouldn't be a change in the signal's shape.

As mentioned in the preliminary discussion, the commercial implementation of AM modulation commonly involves a Class C amplifier for efficiency. When a Class C amplifier is operated at depths of modulation above 100% its operation no-longer corresponds with the model of an ideal AM modulator as implemented here. In these situations, a product detector cannot be used to recover the message without distortion as you have just done.



Ask the instructor to check your work before finishing.

 © 2008 Emona Instruments

Name: _____

Class: _____

2 - Noise in AM communications

Experiment 2 – Noise in AM communications

Preliminary discussion

Any study of communications and telecommunications must inevitably include a consideration of noise. Noise is so important because it interferes with the reproduction of the message at the receiver. For analag messages such as speech and music, noise is usually heard as hiss, crackle and pops that are superimposed on the recovered message.

As you know by now, there are several methods of demodulating AM signals. Two that have been demonstrated in other Emona DATEx experiments include: envelope detection and product detection (or, more appropriately, product demodulation). In completing these experiments, you have seen that product detection has several advantages over envelope detection but it's more difficult to implement in practice. This experiment revisits these demodulation schemes to compare their performance in terms of how they handle interference due to white noise.

To make this comparison, the effects of noise must be objectively quantified. A widely used method for doing so is *signal-to-noise ratio* (SNR). As its name implies, SNR is simply the ratio of signal voltage (or power) to noise voltage (or power). The equation for calculating SNR is:

$$SNR = \frac{S}{N}$$

Where: S = signal voltage or power; and
N = noise voltage or power

The greater the signal relative to the noise (which is desirable), the greater the SNR. That said, simple ratios can be misleading when dealing with signals and so decibels are often preferred. The equation for calculating SNR as a decibel is either:

$$SNR_{(dB)} = 20Log\frac{V_S}{V_N} \quad \text{or} \quad SNR_{(dB)} = 10Log\frac{P_S}{P_N}$$

To perform these calculations, a measurement of the signal's voltage (or power) and the noise's voltage (or power) must be made. In most laboratory environments, the noise is controlled and can be removed from the signal. This makes separate measurements of signal and noise a relatively simple matter. However, in the field, the signal may not be available alone and so an alternative calculation must be used:

$$SNR = \frac{S+N}{N}$$

Obviously, the two SNR ratio equations produce different numbers. However, for a simple quantitative comparison between two systems, this difference is irrelevant. Moreover, the greater the SNR of the system the smaller the difference between the values anyway.

Importantly, the spectral composition of noise usually results in peak and peak-to-peak voltages that vary randomly and so it's difficult to obtain a precise measurement of these. And, unless a test signal such as a sinewave is used, the peak and peak-to-peak voltage of message signals can vary also. That being the case, it's better to measure the RMS value of signal and noise voltages for SNR calculations.

The experiment

For this experiment you'll use the Emona DATEx to set-up an AM modulator. You'll then set-up an envelope detector that receives the AM signal via a bandwidth limited and noisy channel and make SNR measurements for three levels of channel noise. Next, you'll set-up a product detector that also receives the AM signal via a bandwidth limited and noisy channel and make SNR measurements for the same three levels of channel noise. Finally, you'll compare the SNR figures to compare the noise performance of the two demodulators.

It should take you about 50 minutes to complete this experiment.

Pre-requisites:

Experiments 1, 2 & 3 (Vol. 1): Intros to the NI ELVIS II, the Emona DATEx and SFP control
Experiment 5 (Vol. 1): Amplitude modulation
Experiment 8 (Vol. 1): AM demodulation
Experiment 1 (Vol. 2): AM (method 2) and product detection of AM signals

Equipment

- Personal computer with appropriate software installed
- NI ELVIS II plus USB cable and power pack
- Emona DATEx experimental add-in module
- Two BNC to 2mm banana-plug leads
- Assorted 2mm banana-plug patch leads
- One set of headphones (stereo)

 © 2008 Emona Instruments

Procedure

Part A – Setting up the AM modulator

To experiment with noise in AM communications you'll need an AM signal. The first part of the experiment gets you to set one up.

1. Ensure that the NI ELVIS II power switch at the back of the unit is off.

2. Carefully plug the Emona DATEx experimental add-in module into the NI ELVIS II.

3. Set the *Control Mode* switch on the DATEx module (top right corner) to *PC Control*.

4. Connect the NI ELVIS II to the PC using the USB cable.

   Note: This may already have been done for you.

5. Turn on the NI ELVIS II power switch at the rear of the unit then turn on its *Prototyping Board Power* switch at the top right corner near the power indicator.

6. Turn on the PC and let it boot-up.

7. Launch the NI ELVISmx software.

8. Launch and run the NI ELVIS II Variable Power Supplies VI.

9. Adjust the Variable Power Supplies negative output *Voltage* control for an output of about -6V (the exact value is not critical).

10. Launch and run the NI ELVIS II DMM VI.

11. Set up the DMM VI for measuring DC voltages.

12. Launch the DATEx soft front-panel (SFP) and check that you have soft control over the DATEx board.

13. Locate the Adder module on the DATEx SFP and turn its soft *G* and *g* controls fully anti-clockwise.

14. Connect the set-up shown in Figure 1 below.

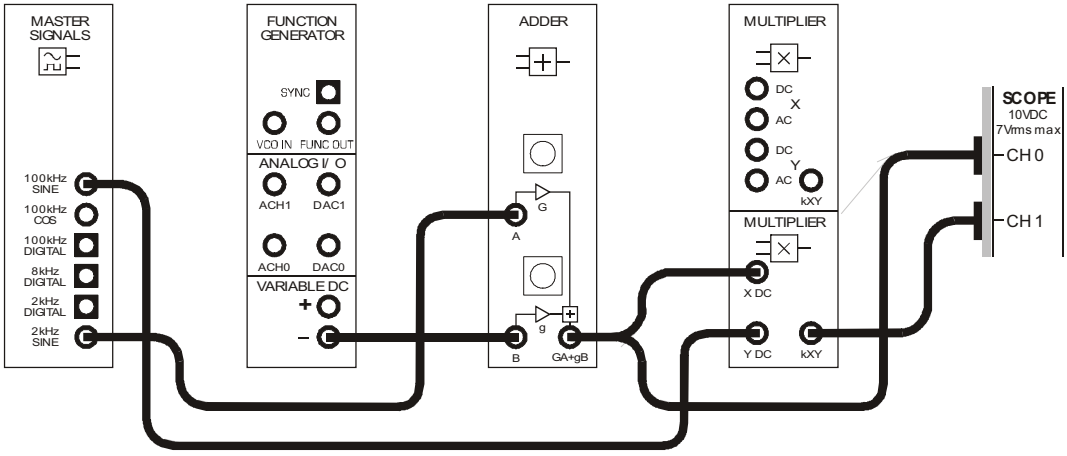

Figure 1

15. Connect the Adder module's output to the DMM and adjust the module's soft *g* control to obtain a 1V DC output.

    Note 1: Remember that you must also connect the DMM's *COM* input to a ground terminal on the Emona DATEx.

    Note 2: Remember also that you can use the keyboards tab and arrow keys for fine adjustment of DATEx soft controls.

16. Disconnect the DMM and close its VI.

17. Launch and run the NI ELVIS II Oscilloscope VI.

18. Adjust the scope as follows:

    - Channel 0 *Coupling* to *DC*
    - Channel 0 *Scale* to *500mV/div*
    - *Timebase* to *100µs/div*
    - *Trigger Type* to *Immediate*

19. Adjust the Adder module's soft *G* control to obtain a 1Vp-p sinewave.

20. Readjust the scope as follows:

    - *Trigger Type* to *Edge*
    - *Trigger Source* to *CH 0*
    - *Trigger Level* control to the *1V* position instead of *0V*

 © 2008 Emona Instruments

The set-up in Figure 1 on the previous page can be represented by the block diagram in Figure 2 below. It generates a 100kHz carrier that is amplitude modulated (m = 0.5 or 50%) by a 2kHz sinewave message.

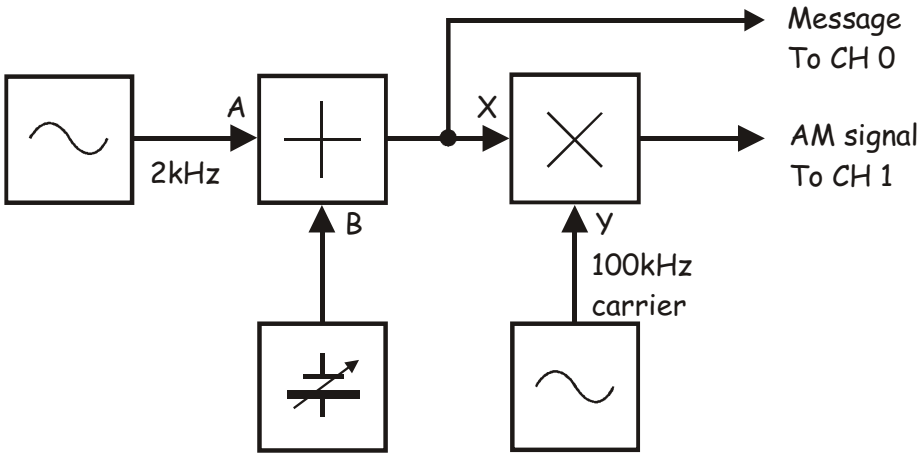

Figure 2

21. Activate the scope's Channel 1 input to view both the message and the modulated carrier.

    Self check: If the scope's *Scale* control for Channel 1 is set to the *1V/div* position, the scope should now display an AM signal with envelopes that are the same shape and size as the message.

Ask the instructor to check your work before continuing.

© 2008 Emona Instruments

Part B – Setting up the noisy channel and envelope detector

The next part of the experiment involves setting up an envelope detector and connecting it to the AM modulator via the model of a bandwidth limited channel (all channels are bandwidth limited). Noise is not added to the channel at this stage but can be easily added later.

22. Modify the set-up as shown in Figure 3 below.

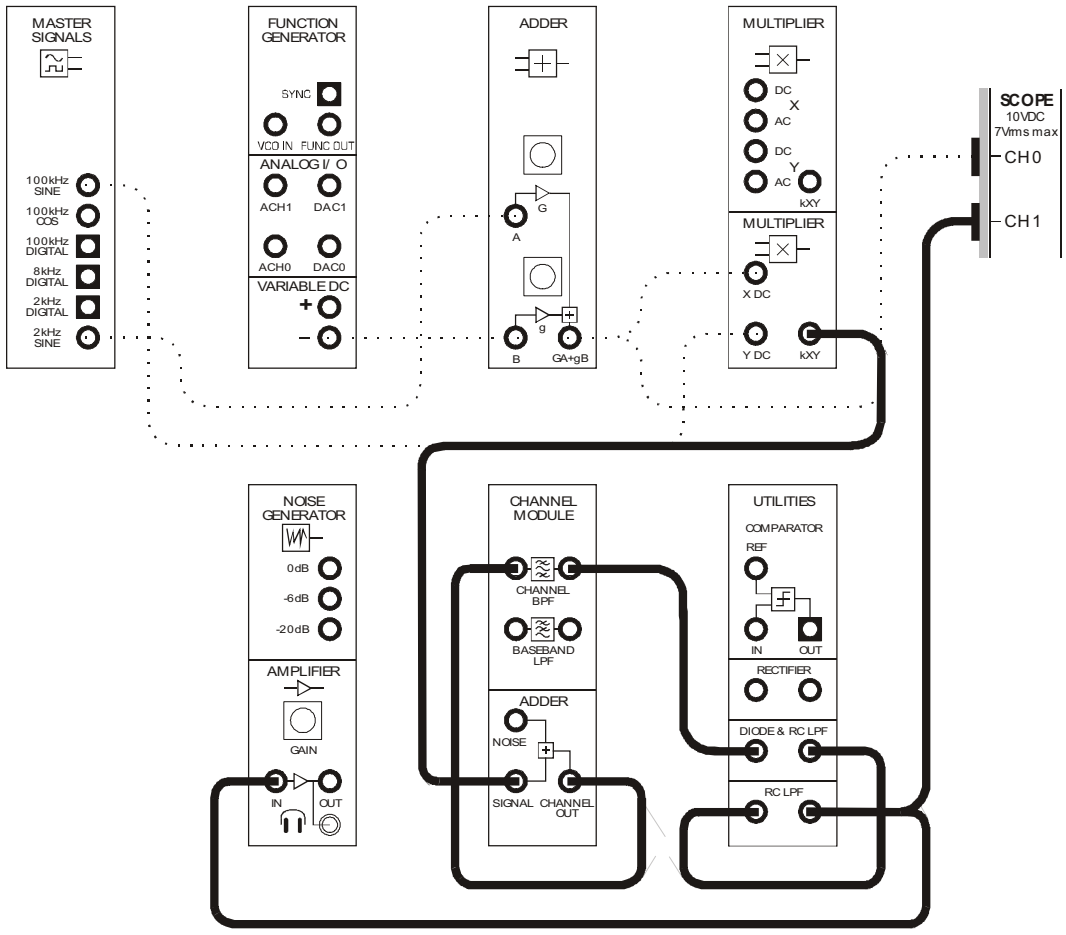

Figure 3

 © 2008 Emona Instruments

The set-up in Figure 3 can be represented by the block diagram in Figure 4 below. The Adder and Channel BPF modules are used to model a bandwidth limited channel that can also be made noisy. (Note: Although the Adder module's *NOISE* input is left unconnected, the input isn't *floating* due to the DATEx's hardware design). The Diode and RC LPF on the Utilities module implement an envelope detector while the additional RC LPF is used to filter any remaining carrier.

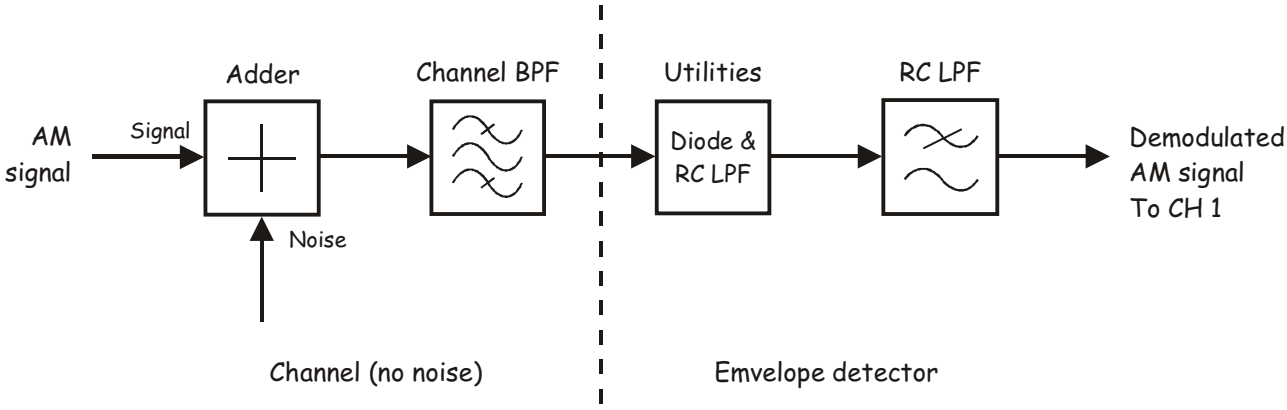

Figure 4

23. Set the scope's two *Coupling* controls to *AC.*

24. Compare the original message with the demodulated message.

    Note: They should be the same shape and about the size (though there will be a phase shift).

25. Turn the Amplifier module's soft *Gain* control fully anti-clockwise to reduce it to minimum.

26. Without wearing the headphones, plug them into the Amplifier module's headphone socket.

27. Put the headphones on.

28. Increase the Amplifier module's gain until you can comfortably hear the recovered message.

29. Listen closely to the signal to see if you can hear any sound other than the 2kHz tone.



Ask the instructor to check your work before continuing.

© 2008 Emona Instruments

Part C – The effects of white noise on an envelope detector

The next part of the experiment lets you see and hear the effects of white noise on the output of an envelope detector. You'll also quantify the noise problem for later comparison with product detection of AM signals.

30. Modify the set-up as shown in Figure 5 below.

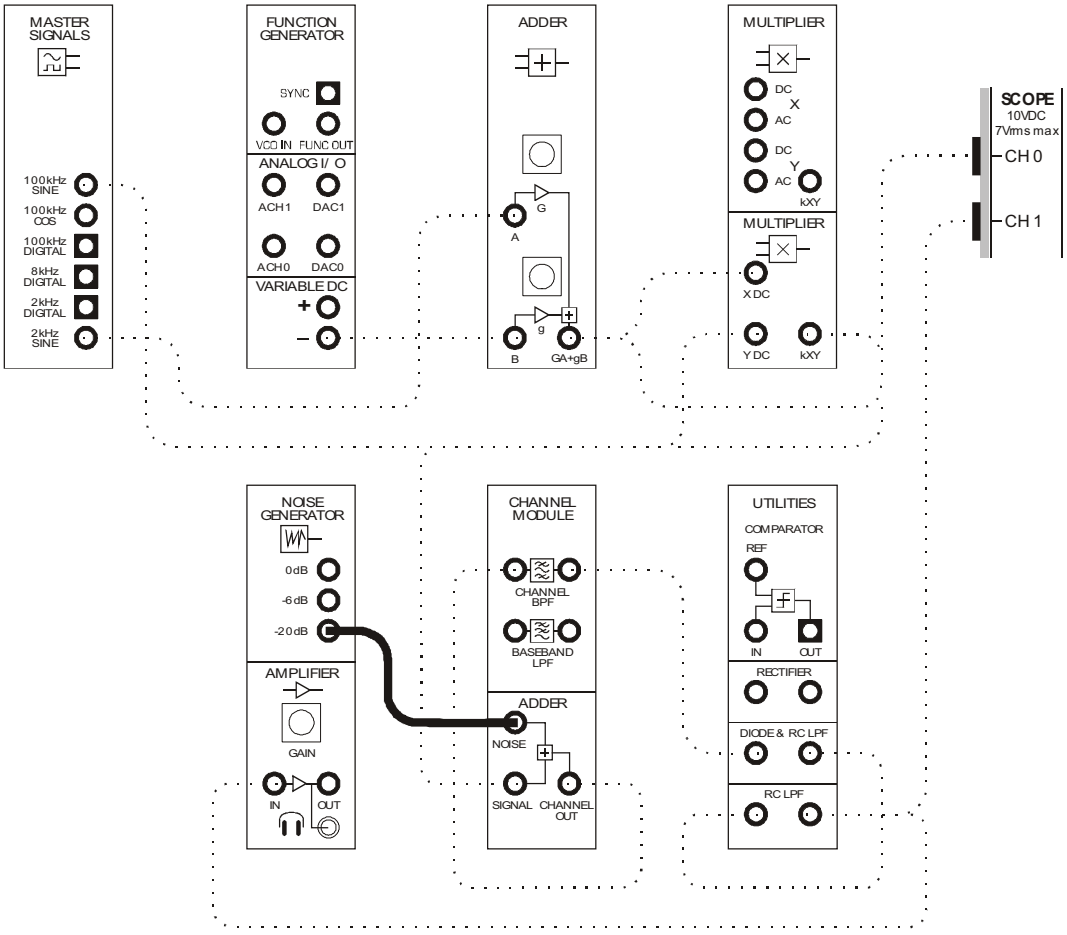

Figure 5

This set-up can be represented by the block diagram in Figure 6 on the next page. The Noise Generator module models white noise at three levels: -20dB, -6dB and 0dB (below the system reference). As you can see, you'll initially start with -20dB which is the lowest level noise output.

 © 2008 Emona Instruments

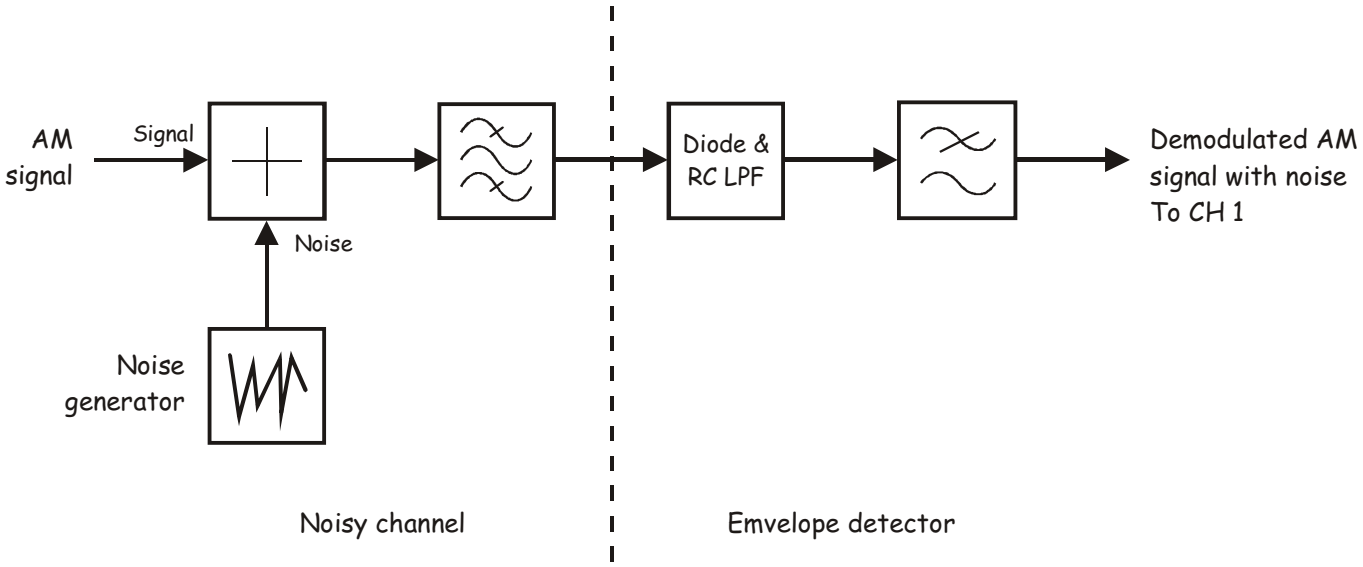

Figure 6

31. Look at and listen to the recovered message and note the effect on the signal's shape and sound.

32. Switch the Adder module's *NOISE* input from the Noise Generator module's *-20dB* output to its *-6dB* output.

33. Note the effect of the increase in noise on the recovered message's shape and sound.

34. Switch the Adder module's *NOISE* input from the Noise Generator module's *-6dB* output to its *0dB* output and repeat Step 33.

Question 1
What does white noise added to an AM signal in the channel sound like at the output of the envelope detector?

Question 2
Why is the 2kHz tone still audible when -6dB and 0dB of introduced noise causes the signal's shape to be so distorted?



Ask the instructor to check your work before continuing.

The next part of the experiment gets you to quantify the noise problem at the receiver's output.

35. Return the noise level to -20dB.

36. Adjust the scope as follows:

    - *Trigger Type* to *Immediate*
    - *Timebase* to *5ms/div*

37. Disconnect the patch lead between the Master Signals module's *2kHz SINE* output and the Adder module's *A* input.

    Note: This removes the message from the input to the modulator and the output of the demodulator.

38. Determine the RMS voltage of the noise on the demodulator's output and record this value in Table 1 on the next page.

    Note 1: The scope is already measuring the RMS voltage for you and is showing it at the bottom of its display.

    Note 2: The measurement will flicker a little so pick a value in the middle of the range.

39. Reconnect the patch lead between the Master Signals module's *2kHz SINE* output and the Adder module's *A* input.

40. Determine the RMS voltage of the combined signal and noise on the demodulator's output and record this value in Table 1 also.

41. Calculate and record the signal to noise ratio using the equation:

$$SNR = \frac{S+N}{N}$$

42. Convert the SNR figure to decibels and record this value too.

43. Repeat Steps 37 to 42 for the -6dB and 0dB noise levels.

 © 2008 Emona Instruments

Table 1	-20dB	-6dB	0dB
Noise voltage (at output)			
Signal plus noise voltage			
SNR			
SNR (in decibels)			

Question 3

What happens to the signal-to-noise ratio as noise increases while the signal remains the same level?



Ask the instructor to check your work before continuing.

Part D – Setting up the noisy channel and product detector

The next part of the experiment involves setting up a product detector and connecting it to the AM modulator via the model of a bandwidth limited channel. Noise is not added to the channel at this stage.

44. Readjust the scope as follows:

    - *Trigger Type* to *Edge*
    - *Timebase* to *100µs/div*

45. Dismantle the envelope detector to return the set-up to the AM modulator shown in Figure 7 below.

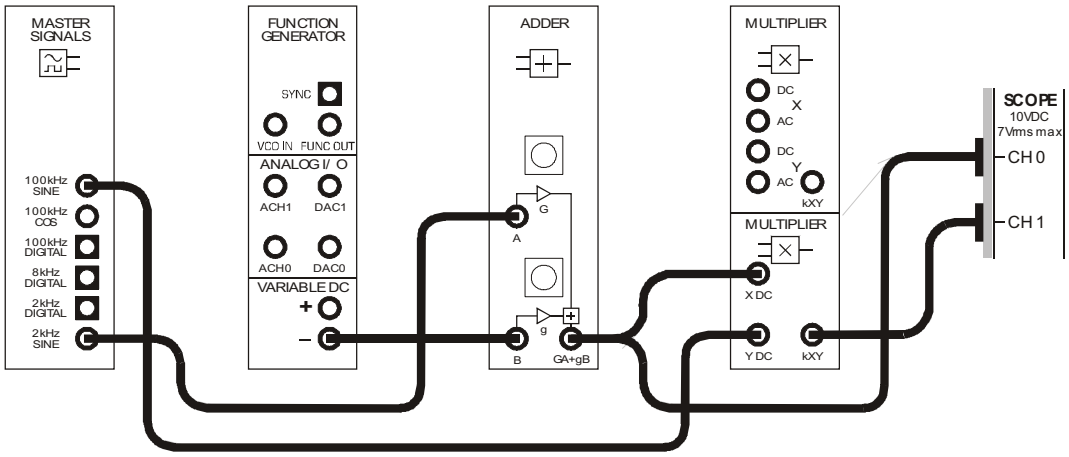

Figure 7

46. Check that the scope shows the original message and the modulated carrier.

 © 2008 Emona Instruments

47. Modify the set-up as shown in Figure 8 below.

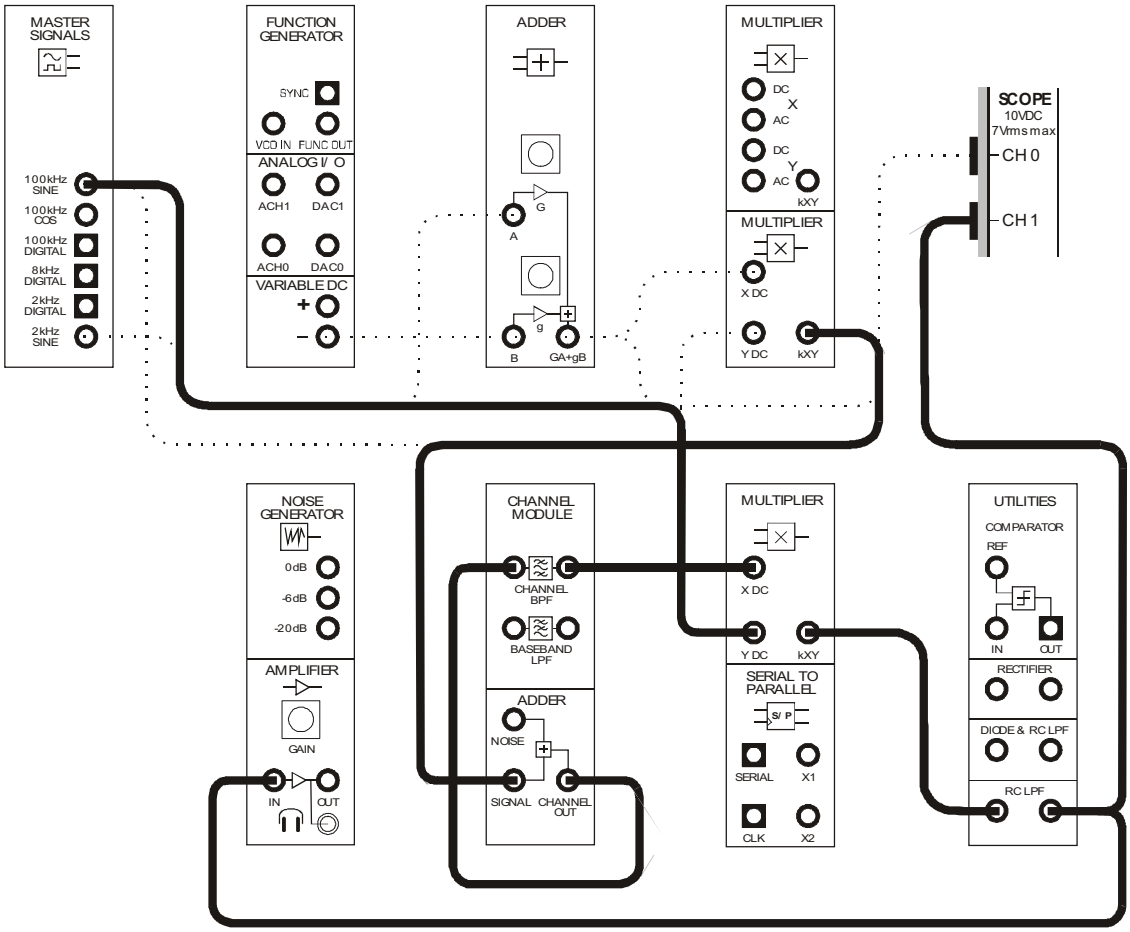

Figure 8

The additions to the set-up can be represented by the block diagram in Figure 9 on the next page. The Multiplier module and the RC LPF implement a product detector with a local carrier that is "stolen" from the Master Signals module so that it's in phase with the AM signal's carrier (recall that carrier synchronisation is an important issue with product detection).

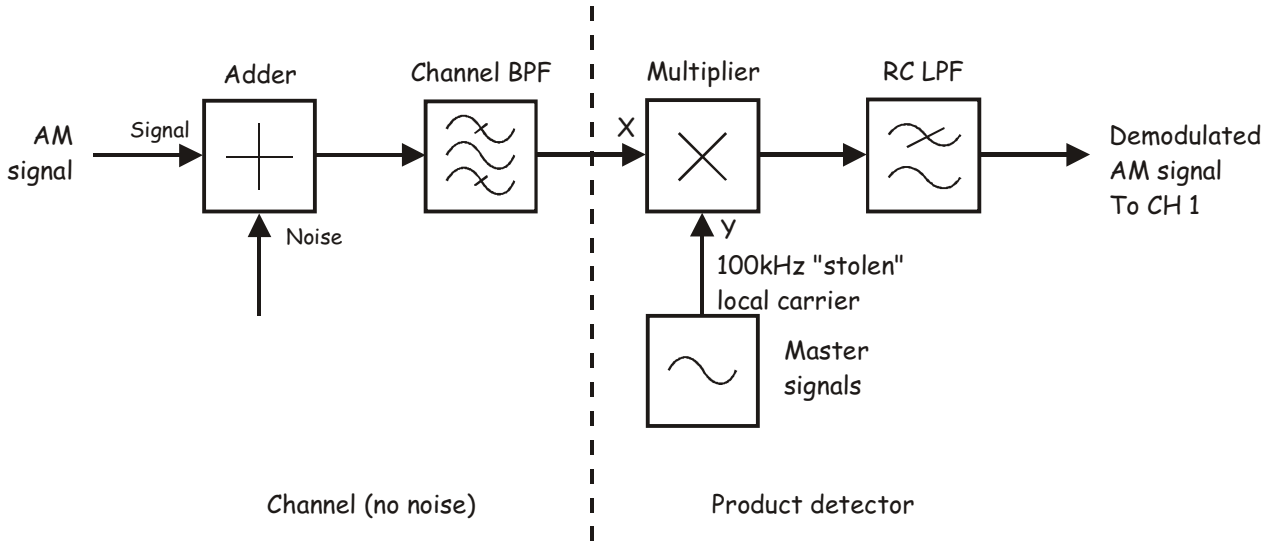

Figure 9

48. Compare the original message with the demodulated message.

    Note: They should be the same shape and about the size (though there will be a phase shift).

49. Listen to the recovered message to check that you can hear a clear 2kHz tone.

Ask the instructor to check your work before continuing.

 © 2008 Emona Instruments

Part E – The effects of white noise on a product detector

The next part of the experiment lets you see and hear the effects of white noise on the output of a product detector. You'll also quantify the noise problem for comparison with envelope detection of noisy AM signals.

50. Modify the set-up as shown in Figure 10 below.

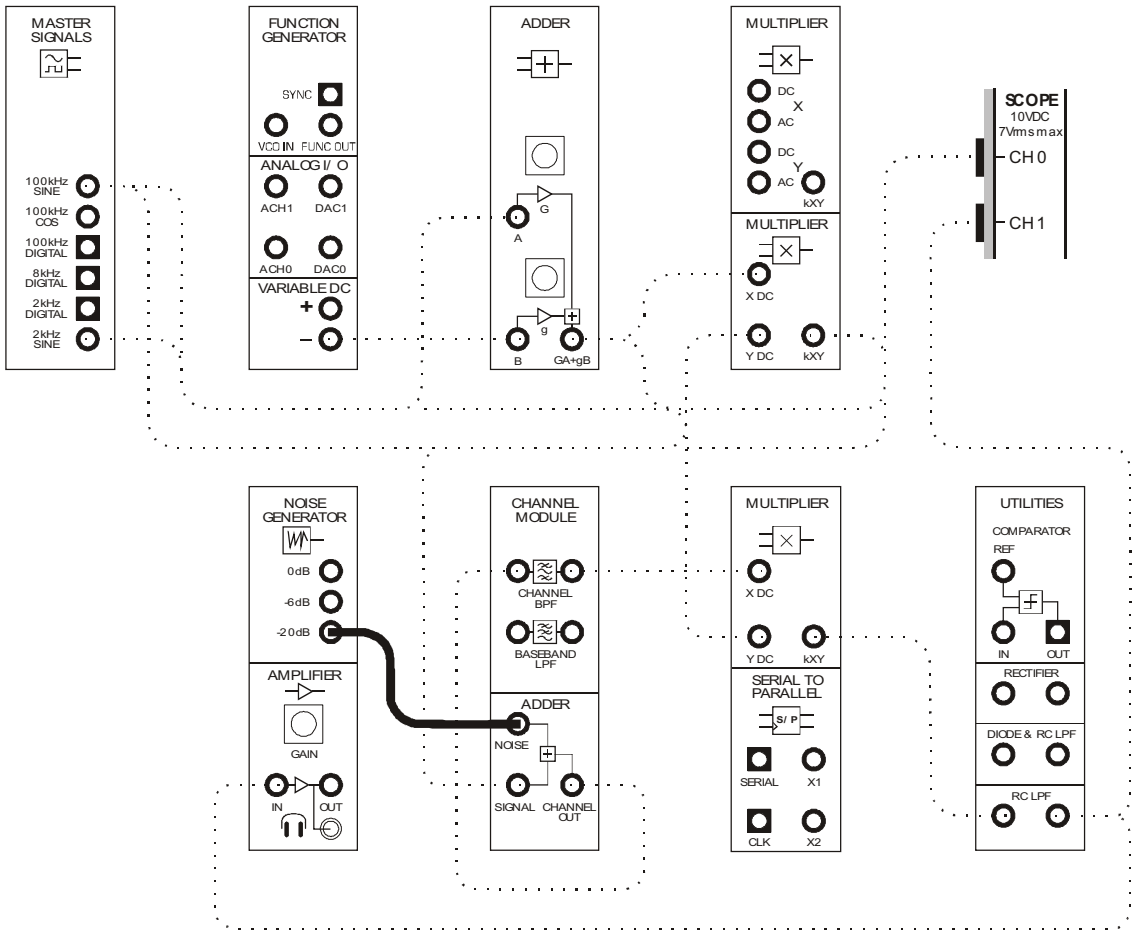

Figure 10

This set-up can be represented by the block diagram in Figure 11 on the next page. The Noise Generator is added to introduce white noise to the channel.

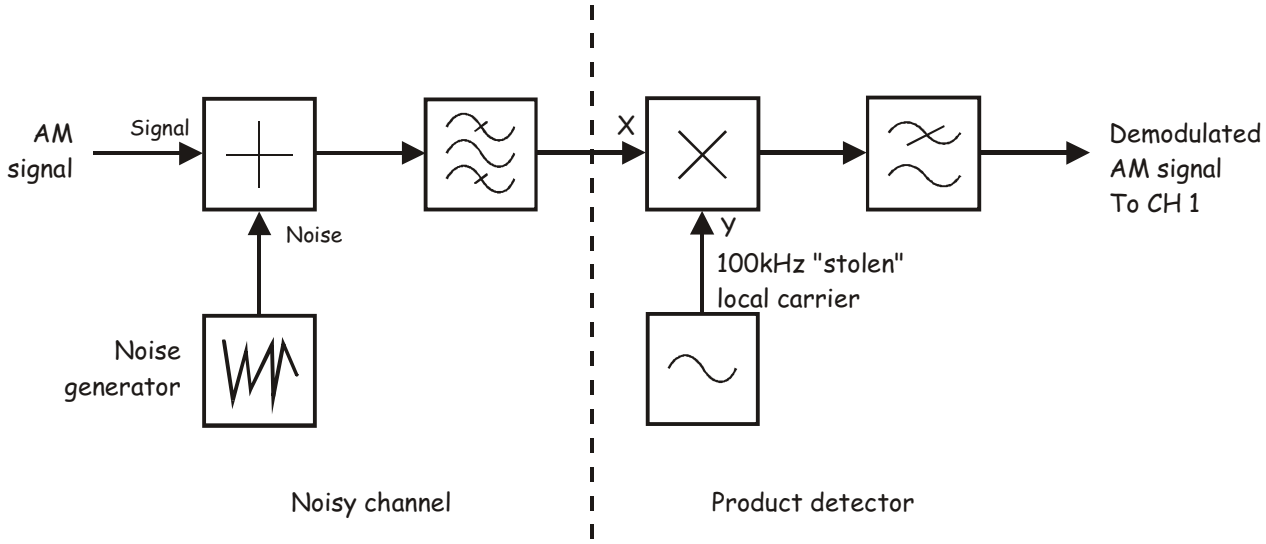

Figure 11

51. Look at and listen to the recovered message and note the effect on the signal's shape and sound.

52. Switch the Adder module's *NOISE* input from the Noise Generator module's *-20dB* output to its *-6dB* output.

53. Note the effect of the increase in noise on the recovered message's shape and sound.

54. Switch the Adder module's *NOISE* input from the Noise Generator module's *-6dB* output to its *0dB* output and repeat Step 53.

Question 4
Is there an audible difference between the noise performance of envelope and product detectors?

Ask the instructor to check your work before continuing.

© 2008 Emona Instruments

The next part of the experiment gets you to verify your answer to Question 4 quantitatively.

55. Return the noise level to -20dB.

56. Adjust the scope as follows:

    - *Trigger Type* to *Immediate*
    - *Timebase* to *5ms/div*

57. Disconnect the patch lead between the Master Signals module's *2kHz SINE* output and the Adder module's *A* input.

    Note: This removes the message from the input to the modulator and the output of the demodulator.

58. Determine the RMS voltage of the noise on the demodulator's output and record this value in Table 2 below.

59. Reconnect the patch lead between the Master Signals module's *2kHz SINE* output and the Adder module's *A* input.

60. Determine the RMS voltage of the combined signal and noise on the demodulator's output and record this value in Table 2 also.

61. Calculate and record the signal to noise ratio using the equation:

$$SNR = \frac{S+N}{N}$$

62. Convert the SNR figure to decibels and record this value too.

63. Repeat Steps 57 to 62 for the -6dB and 0dB noise levels.

Table 2	-20dB	-6dB	0dB
Noise voltage (at output)			
Signal plus noise voltage			
SNR			
SNR (in decibels)			

Question 5

Compare the results in Tables 1 and 2. Is there a significant quantitative difference in the noise performance of the envelope and product detectors? **Tip:** An audible difference is one that is ±3dB.

Question 6

Explain in terms of their mathematical implementation why the noise performance of the two detection methods should be similar.



Ask the instructor to check your work before finishing.

© 2008 Emona Instruments

Name: _____

Class: _____

3 - PCM and time division multiplexing (TDM)

Experiment 3 – PCM and time division multiplexing (TDM)

Preliminary discussion

When you think about it, there is a lot of electronic communication taking place wirelessly. To start with, there are all the radio stations (both AM and FM) and televisions stations that we listen to and watch. Then there are the two-way radio systems for taxis, couriers and the emergency services. There are also nautical and aeronautical communications, cordless phones, cell phones, Bluetooth devices, wireless networks, amateur radio – the list goes on and on. Importantly, these communications can all take place simultaneously because they share the channel (the "airwaves") by dividing up its spectrum.

This is *frequency division multiplexing* (FDM) and involves allocating each user a carrier frequency (usually exclusive use of a carrier but there are exceptions) and a portion of the radio frequency spectrum on either side of it. The user then superimposes their message on the carrier using the appropriate modulation scheme (AM, FM, etc) creating a signal that occupies their allotted portion of the spectrum. Provided users stick to their allocated carrier frequency and bandwidth, this method of sharing the channel works well.

Time division multiplexing (TDM) is another method of sharing the channel that is particularly suited to digital communications. As its name implies TDM involves giving multiple users exclusive access to the entire channel (or to a carrier frequency if TDM is used in conjunction with FDM) only briefly but over and over. Importantly, provided the duration of access is extremely short (much less than a second) and the rate of the access is fast, the users appear to have simultaneous and continuous access to the channel (or carrier).

TDM (or TDMA for *time division multiple access*) has been used extensively in telecommunications with PCM digital data. So let's consider the implementation of TDM in more detail using PCM. Recall that PCM samples analog signals converting them to proportional binary numbers. The binary numbers are then transmitted serially in *frames* usually containing an additional bit (or bits) for frame synchronisation by the PCM decoder. The PCM encoder's clock and the frame-size determine the sample rate. For example, a 100kHz clock and an 8-bit frame give a sample rate of 12.5kS/s (100k ÷ 8 = 12.5k). In turn, the Nyquist sample rate determines the maximum message frequency that can be recovered at the receiver without aliasing. A 12.5kS/s sample rate will allow a theoretically maximum message frequency of 6.25kHz.

Now, suppose the PCM decoder only reads and decodes the contents of every alternate frame in the serial data. The effect of this is the same as halving the sample rate. So, the maximum message frequency would also be halved (to 3.125kHz using our example). [As an aside, this is true for the other digital data schemes as well, not just PCM.] The benefit of reading only every second frame however is, the unread frames are free to be filled with the PCM data for a second message having a maximum frequency equal to the first. Of course, for TDM to work with PCM signals, the PCM decoder must be designed to read the alternate frames as separate sets of data.

Usefully, the Emona DATEx PCM Encoder and PCM Decoder modules can operate as a single-channel PCM system (per the experiments you have undertaken earlier) or as a dual-channel PCM-TDM system. So we can use these modules to model TDMA in telecommunications systems.

The experiment

For this experiment you'll use the Emona DATEx to set up a single-channel PCM communications system. After which, you'll activate the PCM Encoder and Decoder modules' TDM mode to transmit two sets of PCM data between the modules (one for a signal and one for 0V). You'll then investigate sample rate and its effects on the system in terms of aliasing. Finally, you'll modify the set-up to transmit and reconstruct two signals to model a dual-channel TDMA telecommunication system.

It should take you about 40 minutes to complete this experiment.

Pre-requisites:

Experiments 1, 2 & 3 (Vol. 1): Intros to the NI ELVIS II, the Emona DATEx and SFP control
Experiment 13 (Vol. 1): Sampling and reconstruction
Experiment 14 (Vol. 1): PCM encoding
Experiment 15 (Vol. 1): PCM decoding

Equipment

- Personal computer with appropriate software installed
- NI ELVIS II plus USB cable and power pack
- Emona DATEx experimental add-in module
- Two BNC to 2mm banana-plug leads
- Assorted 2mm banana-plug patch leads
- One set of headphones (stereo)

 © 2008 Emona Instruments

Procedure

Part A – Setting up the PCM encoding-decoding scheme
Before experimenting with time division multiplexing (TDM) using a PCM system, you will first set-up a single channel PCM encoding-decoding system.

1. Ensure that the NI ELVIS II power switch at the back of the unit is off.

2. Carefully plug the Emona DATEx experimental add-in module into the NI ELVIS II.

3. Set the *Control Mode* switch on the DATEx module (top right corner) to *PC Control*.

4. Connect the NI ELVIS II to the PC using the USB cable.

   Note: This may already have been done for you.

5. Turn on the NI ELVIS II power switch at the rear of the unit then turn on its *Prototyping Board Power* switch at the top right corner near the power indicator.

6. Turn on the PC and let it boot-up.

7. Launch the NI ELVISmx software.

8. Launch and run the NI ELVIS II Function Generator VI.

9. Adjust the function generator for an output with the following specifications:

   - Waveshape: Sine
   - Frequency: 3kHz
   - Amplitude: 4Vpp
   - DC Offset: 0V

10. Launch the DATEx soft front-panel (SFP) and check that you have soft control over the DATEx board.

11. Locate the Tuneable Low-pass Filter module on the DATEx SFP and adjust its soft *Gain* control for maximum gain.

12. Adjust the Tuneable Low-pass Filter module's soft *Cut-off Frequency Adjust* control for the highest cut-off frequency.

    Note: Once done, the Tuneable Low-pass Filter's maximum cut-off frequency is 15kHz.

13. Set the PCM Encoder module's soft *Mode* switch to the *PCM* position.

14. Connect the set-up shown in Figure 1 below.

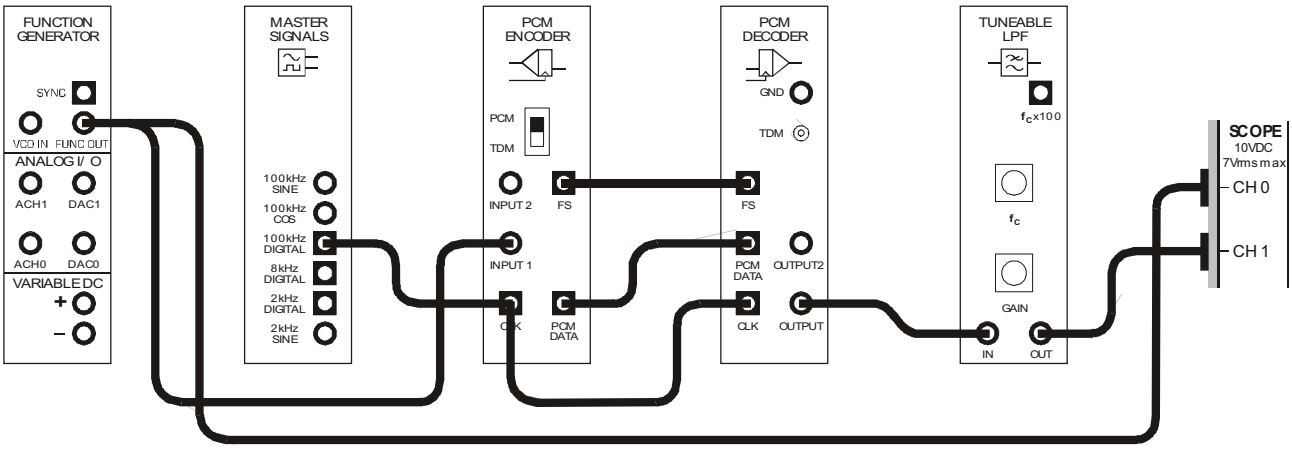

Figure 1

This set-up can be represented by the block diagram in Figure 2 below. The function generator is used to produce a 3kHz sinewave message signal for the PCM Encoder module. The PCM Encoder module converts the message to a PCM digital signal. The PCM Decoder module returns the digital signal to a sampled version of the original signal. The Tuneable Low-pass Filter module is a *reconstruction filter* (also known as an *anti-alias filter*) to recover the message the decoder's output.

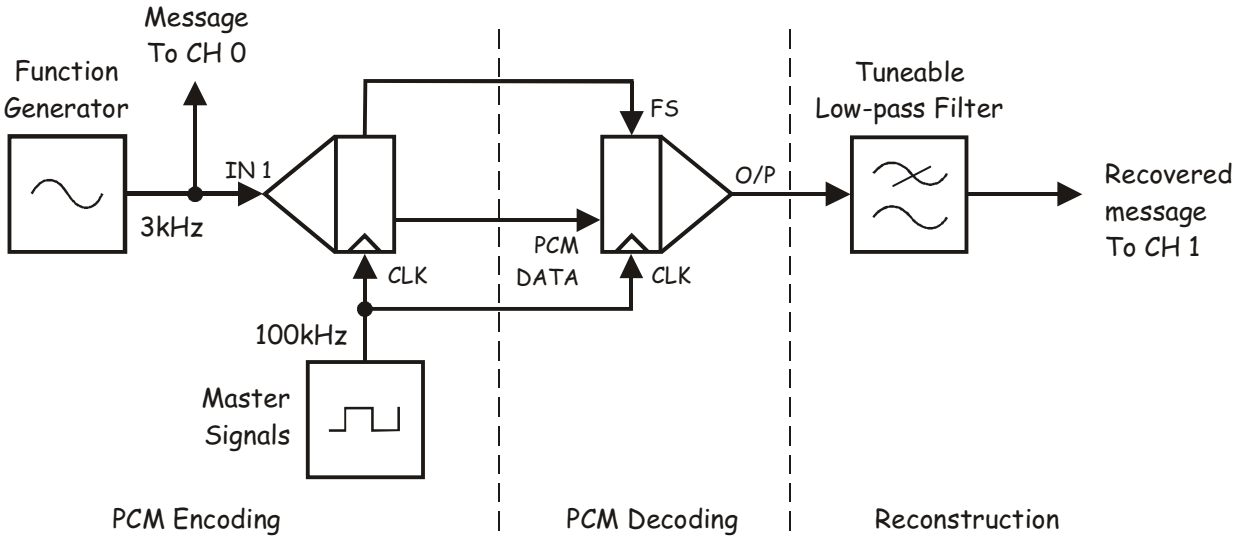

Figure 2

 © 2008 Emona Instruments

15. Launch and run the NI ELVIS II Oscilloscope VI.

16. Adjust the scope to view the two or so cycles of the message signal as a stable display. Essential scope settings include:

    - *Trigger Type* to *Edge*
    - *Trigger Source* to *CH 0*

17. Activate the scope's Channel 1 input to observe the signal on the reconstruction filter's output (that is, the Tuneable Low-pass Filter module's output) as well as the message.

    Note: You should see a distorted copy of the message on the reconstruction filter's output. This distortion is due to the higher frequency components on the PCM Decoder module's output (up to about 15kHz) passing through the filter.

Question 1
What is the name of these higher frequency components?

Question 2
How can the distortion be removed?



Ask the instructor to check your work before continuing.

© 2008 Emona Instruments

Part B – Time division multiplexing and sample rate

As mentioned in the preliminary discussion, time division multiplexing (TDM) necessarily involves a reduction in the PCM system's sample rate. For a given clock frequency and frame size, a dual-channel TDM system halves the sample rate. A four-channel TDM system reduces the sample rate by three quarters and so on. The next part of the experiment lets you investigate why.

18. Slowly reduce the reconstruction filter's cut-off frequency until its output is no-longer distorted.

    Note: Stop this adjustment the moment you obtain a clean copy of the message (ignoring phase shift).

19. Set the PCM Encoder module's soft *Mode* switch to the *TDM* position.

    Note 1: This turns the PCM Encoder-Decoder into a dual-channel PCM-TDM system.

    Note 2: Now, only every second frame of data on the PCM Decoder module's output is used for the message connected to the PCM Encoder module's *INPUT 1* (the 2kHz sinewave). The other frames are used for the PCM data generated by the signal on the PCM Encoder module's *INPUT 2*. With no signal connected to this input, the PCM Encoder will transmit the PCM data for 0V.

    Note 3: Once done, you should see that the reconstructed message is distorted again.

Question 3

Why has this distortion returned when you have adjusted the reconstruction filter's cut-off frequency to remove the aliases that were present?



Ask the instructor to check your work before continuing.

 © 2008 Emona Instruments

Let's investigate this issue in the frequency domain.

20. Return the reconstruction filter's cut-off frequency to maximum.

21. Return the PCM Encoder module's soft *Mode* switch to the *PCM* position.

Question 4
The PCM Encoder-Decoder system's clock is 100kHz and its frame size is eight bits. This gives us a sample rate of 12.5kS/s. Use this information to calculate the frequencies of the first two aliases in the decoded PCM signal for a 3kHz message.

_____

_____

22. Suspend the scope's operation.

23. Launch and run the NI ELVIS II Dynamic Signal Analyzer VI.

24. Adjust the signal analyzer's controls as follows:

Input Settings

- *Source Channel* to *SCOPE CH 1*
- Voltage Range to ±10V

FFT Settings

- *Frequency Span* to *20,000*
- *Resolution* to *400*
- *Window* to *7 Term B-Harris*

Averaging

- *Mode* to *RMS*
- *Weighting* to *Exponential*
- *# of Averages* to *3*

Trigger Settings

- *Type* to *Edge*

Frequency Display

- *Units* to *dB*
- *Mode* to *RMS*
- *Scale* to *Auto*
- *Cursors On* box unchecked (for now)

25. Activate the signal analyzer's cursors and use *C1* to verify that your answer to Question 4 is correct.



Ask the instructor to check your work before continuing.

26. Set the PCM Encoder module's soft *Mode* switch to the *TDM* position again.

Question 5
The PCM Encoder-Decoder now implements a dual-channel PCM -TDM system. This means that, although the clock frequency and frame size haven't changed, the sample rate halves to 6.25kS/s. So, calculate the new frequencies of the first two aliases in the decoded PCM signal for the 3kHz message.

27. Use *C1* to verify that your answer to Question 5 is correct.



Ask the instructor to check your work before continuing.

28. Close the signal analyzer's VI.

29. Restart the scope's VI.

30. Adjust the reconstruction filter's cut-off frequency to see whether you can remove the distortion from the reconstructed message.

Note: You'll probably find that you can't!

© 2008 Emona Instruments

Question 6
Why can't you remove the distortion?

Question 7
What is the name for the distortion now?

Question 8
If the alias is too close to the message frequency it is impossible for any filter to remove it. That being the case, what change must be made to the PCM system to prevent this distortion?



Ask the instructor to check your work before continuing.

© 2008 Emona Instruments

Part C – Implementing the full dual-channel PCM-TDM system

At the moment, your set-up is a dual-channel PCM-TDM system but with an analog signal connected to only one of the inputs. The next part of the experiment gets you connect analog signals to both of the PCM Encoder module's inputs to complete the PCM-TDM system.

31. Return the reconstruction filter's cut-off frequency to maximum.

32. Adjust the function generator for a 2kHz output.

33. Slowly reduce the reconstruction filter's cut-off frequency until you obtain an undistorted copy of the message.

34. Adjust the function generator for a 1kHz output.

35. Modify the set-up as shown in Figure 3 below.

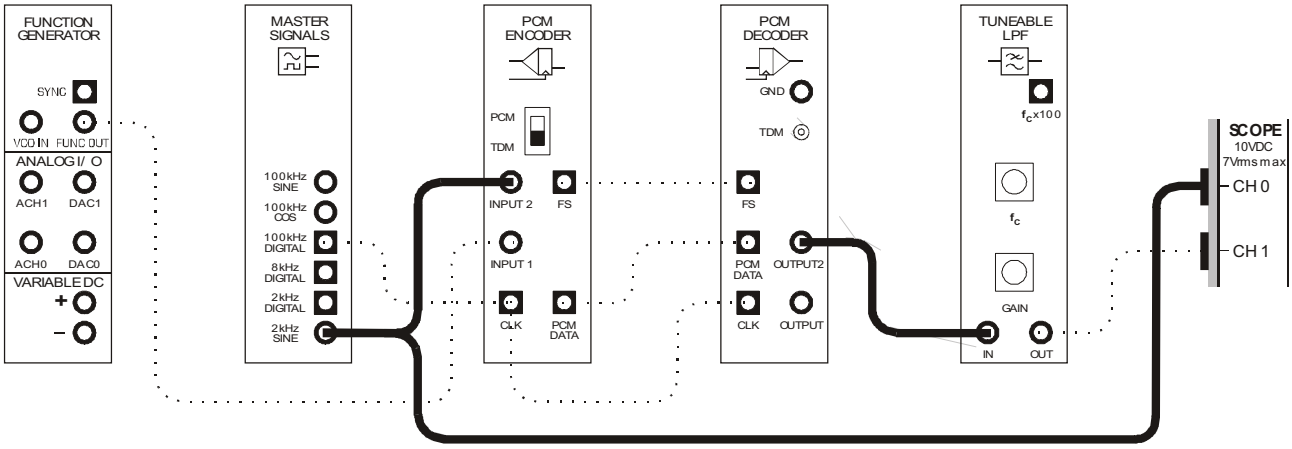

Figure 3

These additions to the set-up can be represented by the block diagram in Figure 4 on the next page. A 1kHz sinewave from the function generator is connected to the PCM Encoder module's *INPUT 1* and a 2kHz sinewave from the Master Signals module is connected to its *INPUT 2*. The PCM-TDM system now encodes, transmits and decodes two analog signals instead of just one.

 © 2008 Emona Instruments

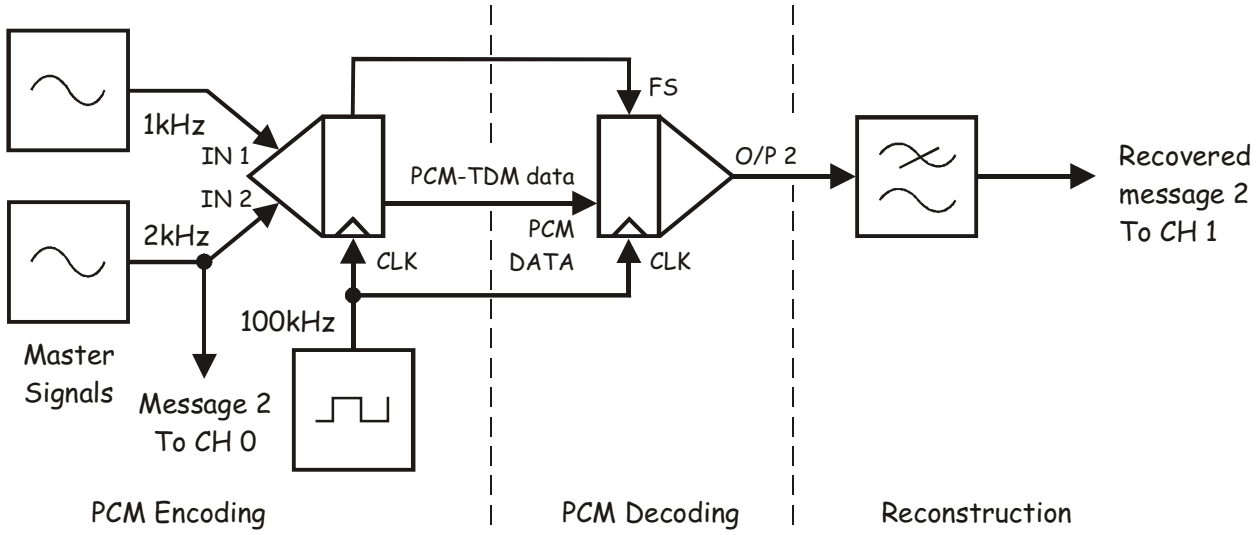

Figure 4

36. Compare the original message-2 with the reconstructed version of message-2. They should be the same.

37. Modify the set-up as shown in Figure 5 below leaving the scope connections as they are.

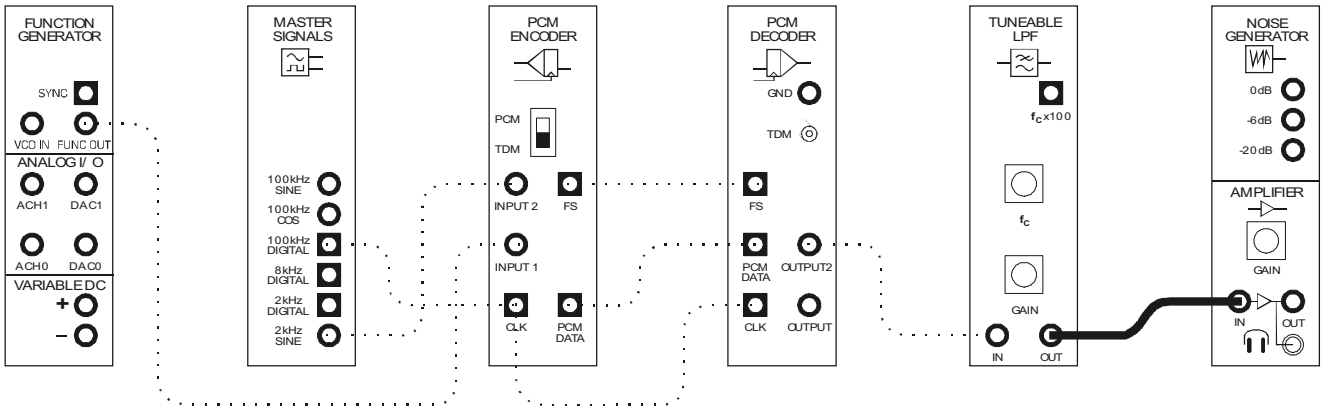

Figure 5

© 2008 Emona Instruments

38. Turn the Amplifier module's soft *Gain* control fully anti-clockwise to reduce it to minimum.

39. Without wearing the headphones, plug them into the Amplifier module's headphone socket.

40. Put the headphones on.

41. Increase the Amplifier module's gain until you can comfortably hear the reconstructed version of message-2.

42. Locate the patch lead connected to the reconstruction filter's input and swap its other end from the PCM Decoder module's *OUTPUT 2* to its *OUTPUT*.

    Note: You'll now be listening to the reconstructed version of message-1 and it should sound like a higher frequency.

PCM encoding and decoding has been used extensively in telecommunications. And naturally, one of the primary functions of telecommunications is to allow people to talk to each other. Let's see how your PCM-TDM system performs when one of the message signals is speech.

43. Modify the set-up as shown in Figure 6 below (again, leaving the scope connections as they are).

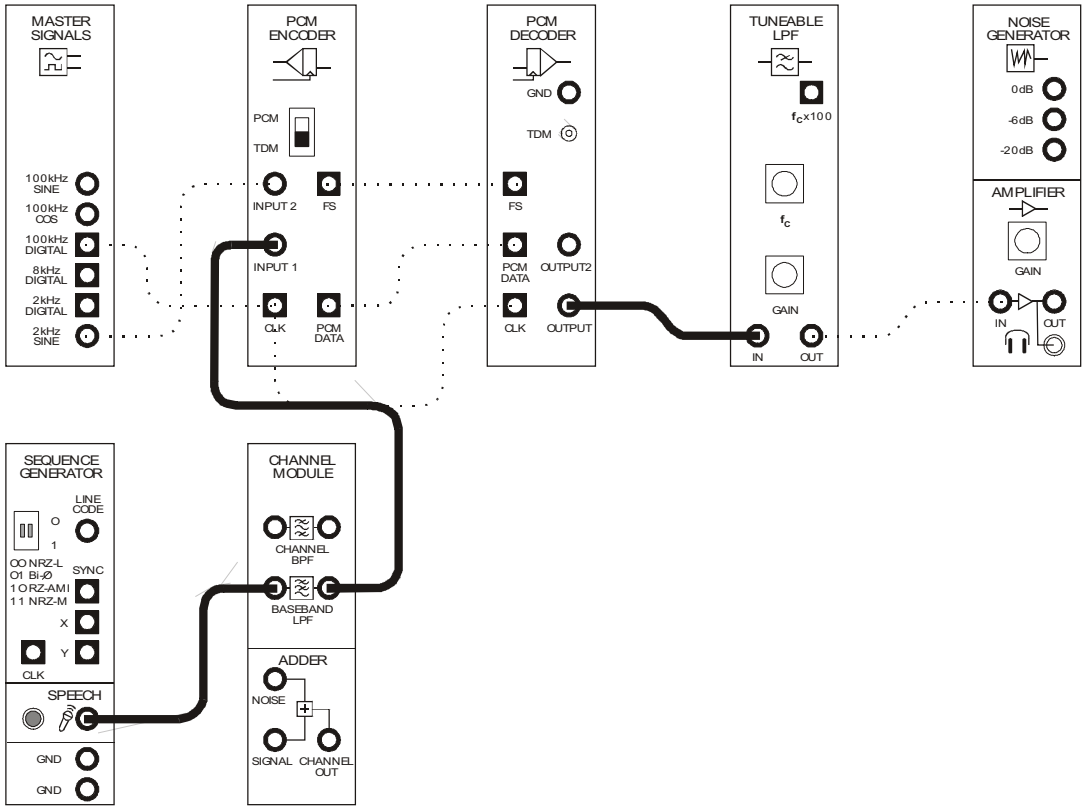

Figure 6

 © 2008 Emona Instruments

The set-up in Figure 6 can be represented by the block diagram in Figure 7 below. The 1kHz sinewave from the function generator has been removed and replaced by the output of the speech module. Notice that the speech signal is band-limited to 2kHz using the Baseband LPF module. This prevents the higher frequency components of the speech signal from producing aliases inside the reconstruction filter's pass-band.

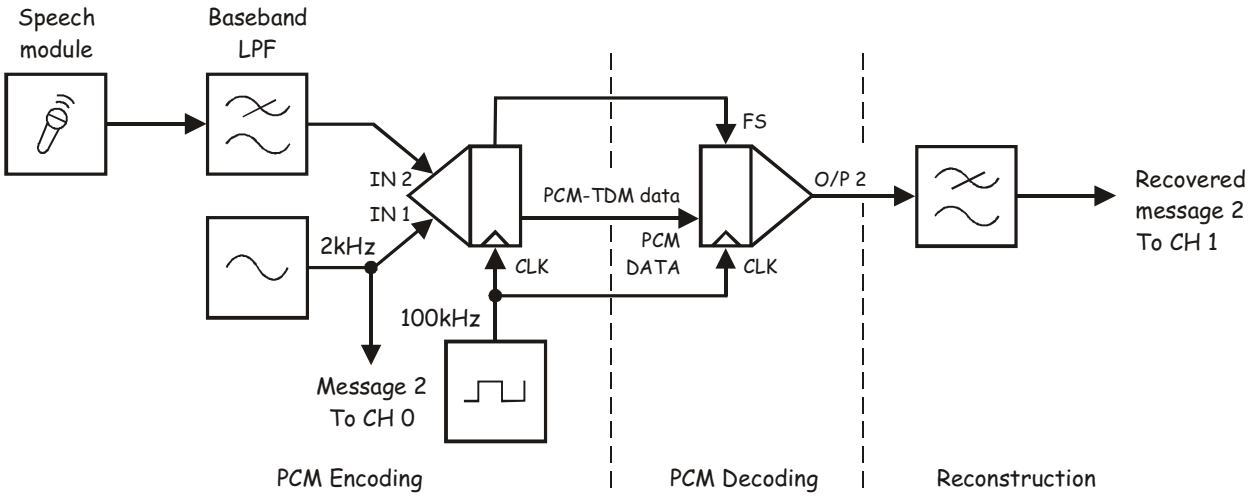

Figure 7

44. Set the scope's *Timebase* to *1ms/div*.

45. Swap the patch lead connected to the reconstruction filter's input between the PCM Decoder module's *OUTPUT 2* and *OUTPUT* while humming and talking into the microphone.

Question 9
What change would need to be made to this set-up for it to encoder-decode two message signals each with a 4kHz bandwidth?

Ask the instructor to check your work before finishing.

© 2008 Emona Instruments

Name: _____

Class: _____

4 - An introduction to Armstrong's modulator

Experiment 4 – An introduction to Armstrong's modulator

Preliminary discussion

As you know, the amplitude and frequency modulation schemes vary the amplitude or frequency of a carrier in response to changes in the amplitude of the message. It follows then that phase modulation (PM) varies the phase of a carrier in response to changes in the amplitude of the message.

Armstrong's modulator is a long-standing method of implementing phase modulation that involves generating a DSBSC signal and adding a carrier back into it that is the same frequency as the suppressed carrier but 90° out of phase with it. This is shown in the block diagram in Figure 1 below.

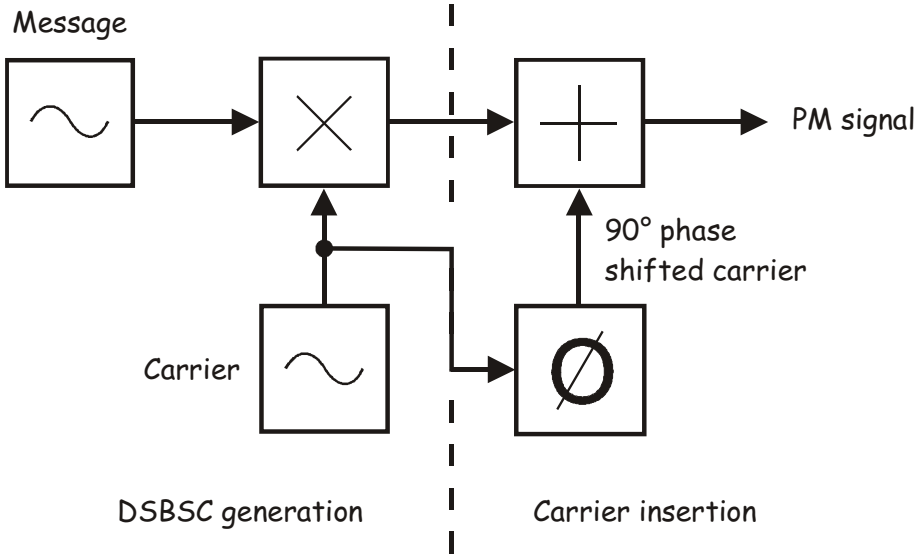

Figure 1

The interaction between the inserted carrier and the DSBSC signal's sidebands results in a signal that satisfies the definition of PM. This can be demonstrated using phasor diagrams.

First, to give you a point of reference, Figure 2 to the right shows the phasor diagram of an AM signal. Recall that all phasors are said to rotate anti-clockwise. But, if the position of the carrier's phasor is frozen, the upper sideband's phasor would continue to rotate anti-clockwise about the carrier's tip because it's a higher frequency. At the same time, the lower sideband's phasor would continue to rotate clockwise about the carrier's tip because it's a lower frequency.

The vector sum of the carrier and sidebands at any instant in the AM signal always produces a resultant that is in phase with the carrier but with an amplitude that varies.

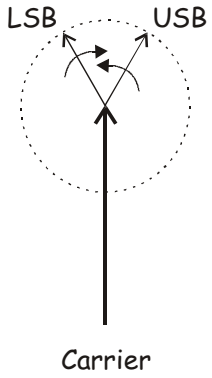

Figure 2

This fact is shown in Figure 3 below when the message is a positive voltage, as it crosses zero and when it's a negative voltage.

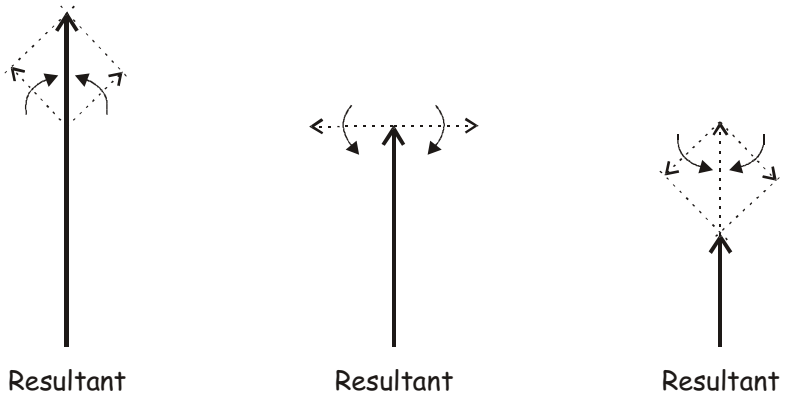

Figure 3

The phasor representation of the signal on the output of the block diagram in Figure 1 (for the same positive message voltage as in Figure 2) is shown in Figure 4 to the right. Notice that the DSBSC signal's sidebands are perpendicular to the tip of the inserted carrier due to its 90° of phase shift.

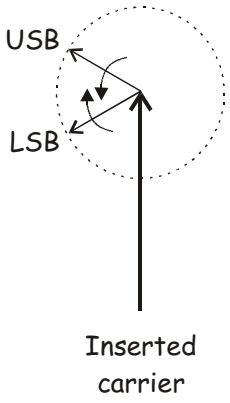

Figure 4

Importantly, the vector sum of the inserted carrier and sidebands at any instant in the signal produces a resultant with a continuously changing phase relative to the inserted carrier. This is shown in Figure 5 below when the message is a positive voltage, as it crosses zero and when it's a negative voltage. Notice that the direction of the phase shift leads and lags the inserted carrier over the message's cycle.

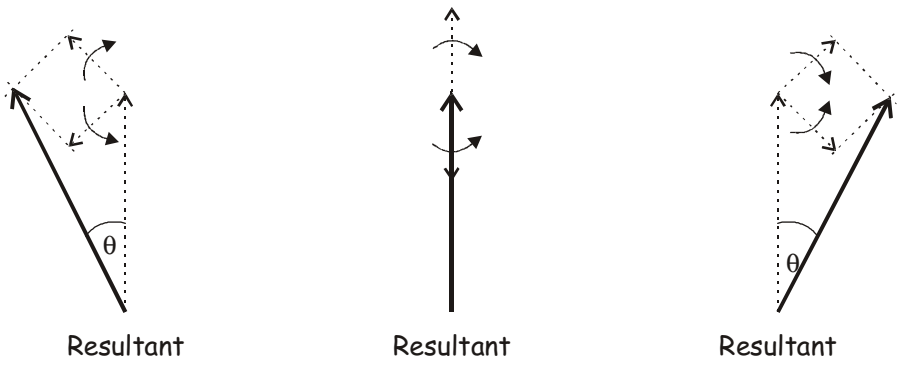

Figure 5

If you look closely at the phasor diagram in Figure 5 (on the previous page), you'll notice that the resultant changes amplitude as well as phase. This tells us that, displayed on a scope, the signal has envelopes. This means that, at this stage, the signal is actually single-channel *quadrature amplitude modulation* (QAM). True (narrow-band) phase modulation is achieved when the envelopes are removed using a limiter. As Figure 6 to the right shows, limiter changes the carrier's locus from a circle about its tip to a plane perpendicular to its tip. However, the phase shifts caused by the message are unaffected.

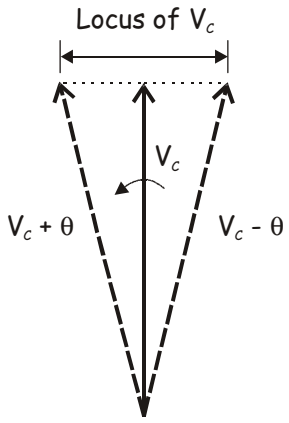

Figure 6

The experiment

For this experiment you'll use the Emona DATEx to generate a DSBSC signal then insert a carrier at the same frequency as the carrier used to generate it. You'll then adjust the inserted carrier for quadrature using the scope and your hearing. Finally, you'll limit and filter the signal to convert it PM and observe its properties using a scope.

It should take you about 40 minutes to complete this experiment.

Pre-requisites:

Experiments 1, 2 & 3 (Vol. 1): Intros to the NI ELVIS II, the Emona DATEx and SFP control
Experiment 5 (Vol. 1): Amplitude modulation
Experiment 6 (Vol. 1): DSBSC modulation
Experiment 8 (Vol. 1): AM demodulation
Experiment 9 (Vol. 1): DSBSC demodulation
Experiment 1 (Vol. 2): AM (method 2) and product detection of AM signals (desirable)

Equipment

- Personal computer with appropriate software installed
- NI ELVIS II plus USB cable and power pack
- Emona DATEx experimental add-in module
- Two BNC to 2mm banana-plug leads
- Assorted 2mm banana-plug patch leads

Procedure

Part A - Generating a DSBSC signal

To implement Armstrong's modulator, you'll need a DSBSC signal. The first part of this experiment gets you to set one up.

1. Ensure that the NI ELVIS II power switch at the back of the unit is off.

2. Carefully plug the Emona DATEx experimental add-in module into the NI ELVIS II.

3. Set the *Control Mode* switch on the DATEx module (top right corner) to *PC Control*.

4. Connect the NI ELVIS II to the PC using the USB cable.

   Note: This may already have been done for you.

5. Turn on the NI ELVIS II power switch at the rear of the unit then turn on its *Prototyping Board Power* switch at the top right corner near the power indicator.

6. Turn on the PC and let it boot-up.

7. Launch the NI ELVISmx software.

8. Connect the set-up shown in Figure 7 below.

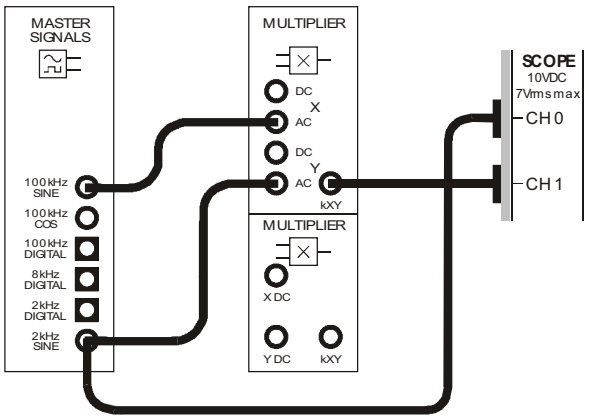

Figure 7

The set-up in Figure 7 can be represented by the block diagram in Figure 8 below. It uses a 2kHz sinewave message to DSBSC modulate 100kHz sinewave carrier.

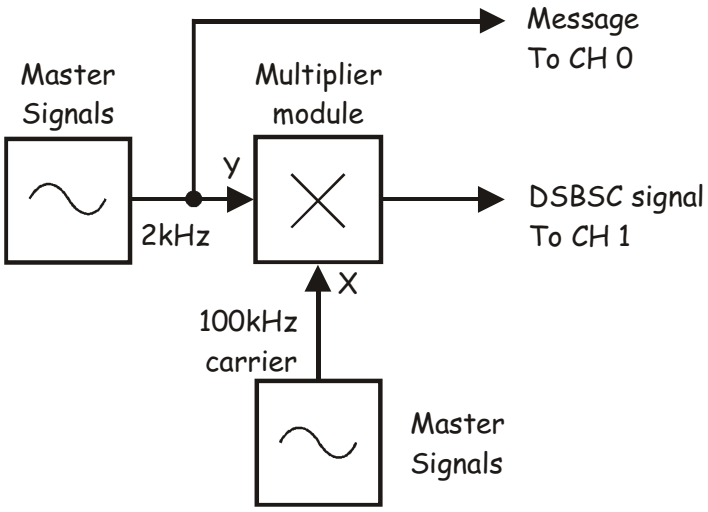

Figure 8

9. Launch and run the NI ELVIS II Oscilloscope.

10. Adjust the scope to view the message and the DSBSC signal. Essential scope settings include:

    - *Coupling* for both channels to *AC*
    - *Timebase* to *200µs/div*
    - *Trigger Type* to *Edge*
    - *Trigger Source* to *CH 0*

11. Verify that the Multiplier module's output is a DSBSC signal by checking that alternating halves of its envelope form a copy of the message.



Ask the instructor to check your work before continuing.

© 2008 Emona Instruments

Part B – Adding the carrier to the DSBSC signal

The next part of the experiment gets you to add the carrier to the DSBSC signal using the Adder module.

12. Launch the DATEx soft front-panel (SFP) and check that you have soft control over the DATEx board.

13. Locate the Adder module on the DATEx SFP and set its soft *G* and *g* controls to about the middle of their travel (the exact position isn't critical at this stage).

14. Locate the Phase Shifter module on the DATEx SFP and set its soft *Phase Change* control to the *0°* position.

15. Set the Phase Shifter module's soft *Phase Adjust* control to about the middle of its travel.

16. Modify the set-up as shown in Figure 9 below.

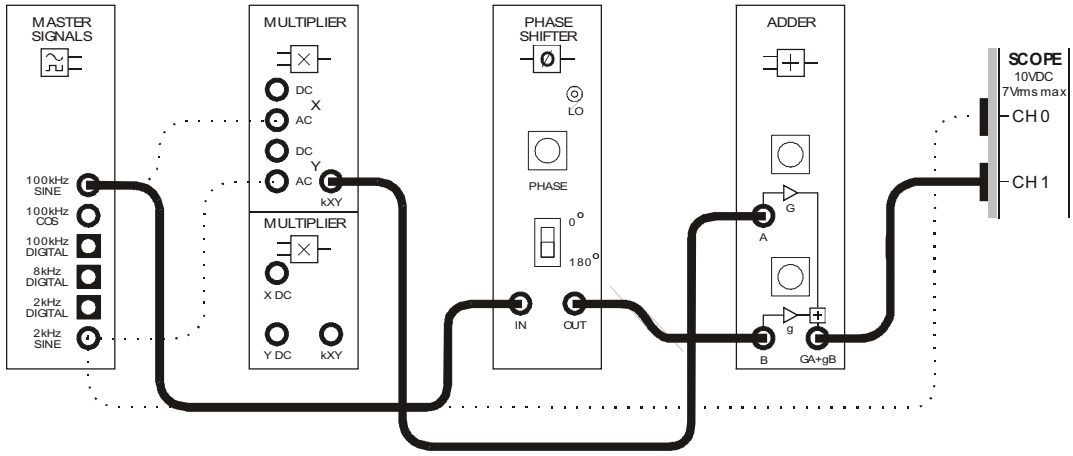

Figure 9

 © 2008 Emona Instruments

This set-up in Figure 9 can be represented by the block diagram in Figure 10 below. The 100kHz carrier is added to the DSBSC signal using the Adder module. However, the signal is first passed through the Phase Shifter module so that you can adjust its phase shift related to the DSBSC signal's suppressed carrier.

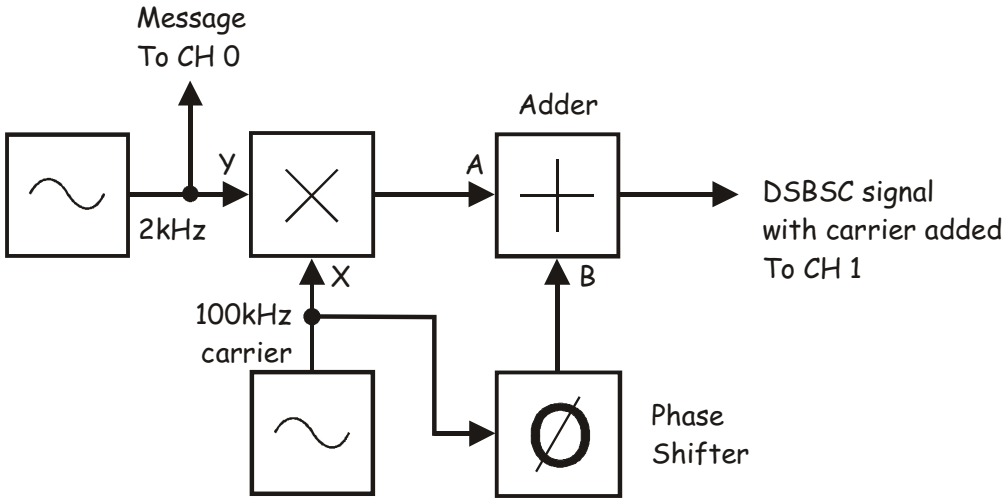

Figure 10

17. Observe the Adder module's output using the scope.

Note: You'll notice that the signal looks like some kind of horribly distorted AM signal!

Ask the instructor to check your work before continuing.

Part C – Adjusting the set-up for quadrature using the scope

For this set-up be to turned into a phase modulator, the inserted carrier must have 90° of phase shift relative to the suppressed carrier of the DSBSC signal. In other words the inserted carrier must be in quadrature with the suppressed carrier. The next part of this experiment gets you obtain this phase relationship. However, the method for doing so needs a little explanation first.

It was mentioned in the preliminary discussion that, without limiting, the modulated carrier has envelopes. In fact, you've just seen them when performing Step 17. Usefully, provided the DSBSC signal and inserted carrier are the same amplitude, when quadrature is obtained the modulated signal's envelopes resemble the message. However, there is an important difference. The envelopes are twice the message frequency (because the modulated carrier signal achieves maximum amplitude twice for every cycle of the message). This fact can be used to obtain the correct phase relationship for the inserted carrier.

18. Disconnect the patch lead to the Adder module's *A* input.

    Note: This removes the DSBSC signal from the Adder module's output.

19. Adjust the Adder module's soft *g* control for an output of 4Vp-p.

    Note 1: The Adder module's output is observed on the scope's Channel 1 input.

    Note 2: There's probably no need to adjust the scope's Timebase control to do this.

20. Reconnect the patch lead to the Adder module's *A* input.

21. Disconnect the patch lead to the Adder module's *B* input.

    Note: This removes the added carrier from the Adder module's output.

22. Adjust the Adder module's soft *G* control for an output of 4Vp-p.

23. Reconnect the patch lead to the Adder module's *B* input.

    Note: Once done, you'll probably find that the envelopes have peaks of alternating height. There should also be twice as many peaks as the message signal.

The amplitude of the inserted carrier and the peak-to-peak amplitude of the DSBSC signals are now the same.

24. Carefully adjust the Phase Shifter module's soft *Phase Adjust* control to obtain alternating peaks on the upper (or lower) envelope that are the same height.

Question 1
What type of modulation is the modulated signal at this stage?



Ask the instructor to check your work before continuing.

Part D – Adjusting the set-up for quadrature using your hearing

There is an alternative method of adjusting for quadrature that involves using your hearing. To explain, if the inserted carrier is in-phase with the suppressed carrier, an AM signal is generated. This is the basis of the second method for generating AM as introduced in Experiment 1 of this manual. Obviously then, an envelope detector can be used to reproduce the message which, in our case here, is a 2kHz sinewave.

Recall from the discussion on the math of AM demodulation in Part E of Experiment 8 (Vol. 1) that envelope detection also produces a very minor product at twice the message frequency - 4kHz in this case. This signal is the product of the AM signal's sidebands and would not be generated if product detection is used. Importantly, although the signal is audible, its small size and spectral proximity to the 2kHz sinewave prevent us from hearing it (one of the effects of *psycho-acoustics*).

If the phase of the inserted carrier is varied, the phase error between it and the suppressed carrier begins to attenuate 2kHz sinewave. However, the 4kHz sinewave is unaffected (due to its origin) and so becomes audible. At quadrature, the recovered message is completely cancelled and all that can by heard is the 4kHz sinewave.

The next part of the experiment gets you to use your hearing to obtain quadrature.

25. Turn the Phase Shifter module's soft *Phase Adjust* control fully anti-clockwise so that quadrature is lost.

26. Modify the set-up as shown in Figure 11 below leaving the scope's connections as they are.

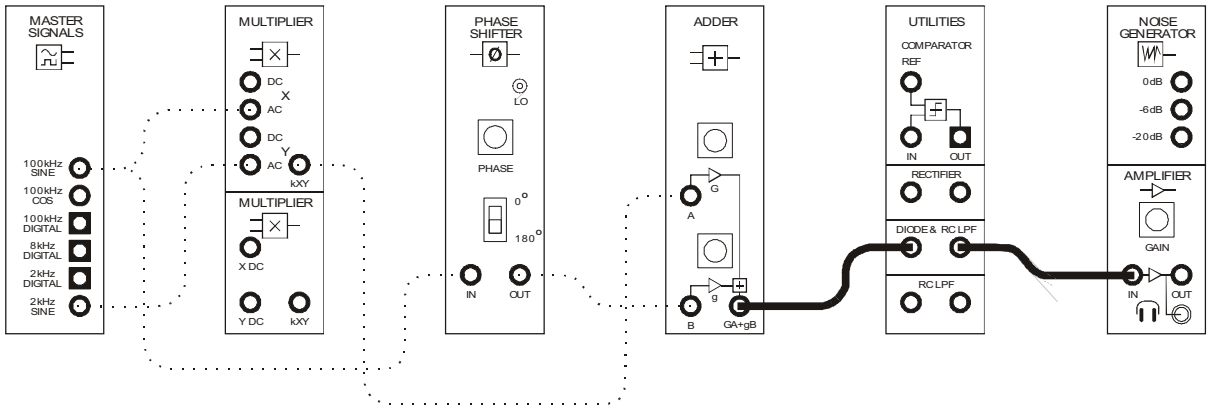

Figure 11

27. Turn the Amplifier module's soft *Gain* control fully anti-clockwise.

28. Without wearing the headphones, plug them into the Amplifier module's headphone socket.

29. Put the headphones on.

30. Increase the Amplifier module's gain until you can comfortably hear the recovered message on the envelope detector's output.

31. Slowly increase the Phase Shifter module's phase shift stopping when you can hear two tones.

    Note: At this point, you can hear the 2kHz recovered message and the 4kHz component which is the product of the modulated signal's sidebands.

32. Slowly increase the Phase Shifter module's phase shift stopping when you can only hear the new tone.

    Note: At this point, quadrature is achieved and so the 2kHz tone is completely cancelled.

Ask the instructor to check your work before continuing.

Part E – Converting the modulated signal to PM

As mentioned in the preliminary discussion, the signal on the Adder module's output has amplitude as well as phase variations. For (narrow-band) PM, we need only the phase variations and so a limiter is used to remove the amplitude variations. The next part of the experiment gets you to do this.

33. Disconnect the additions you made per Figure 11.

34. Modify the set-up as shown in Figure 12 below making sure that you change both scope connections as indicated.

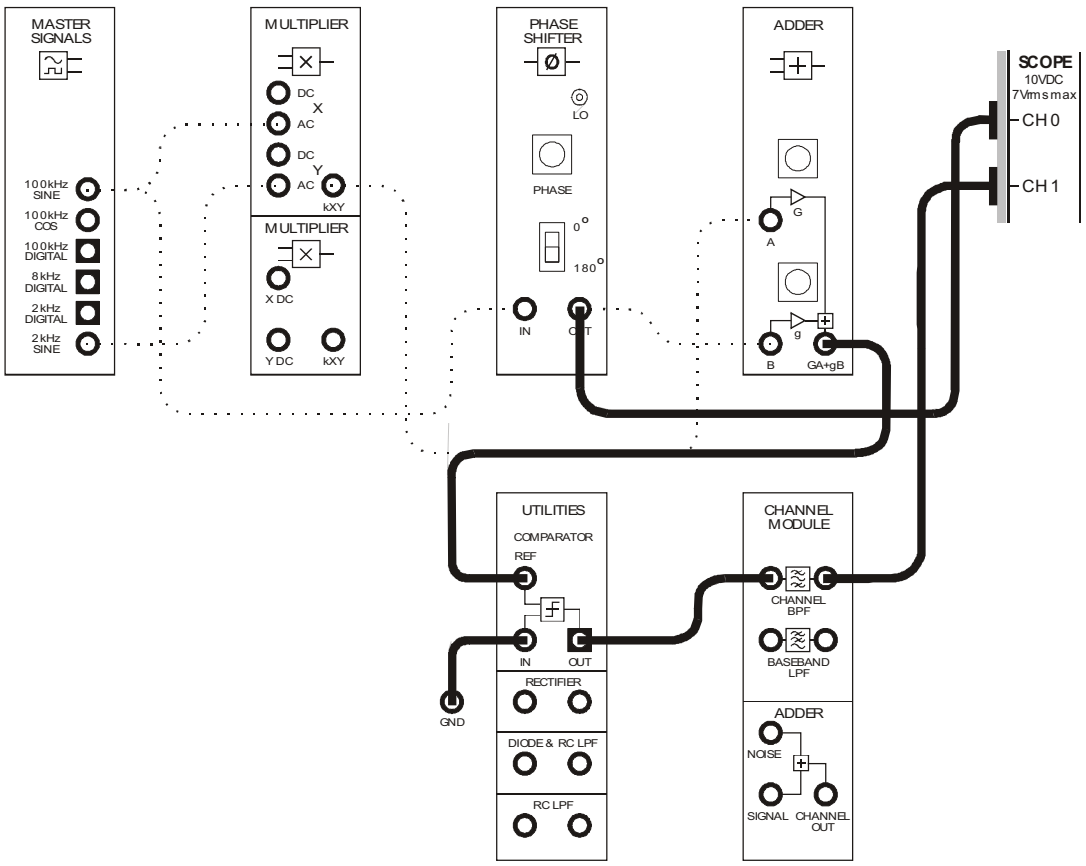

Figure 12

The set-up in Figure 12 can be represented by the block diagram in Figure 13 below. The Comparator on the Utilities module is used to remove the modulated carrier's envelopes. The Channel BPF is used to remove the additional spectral components that this limiting inevitably adds.

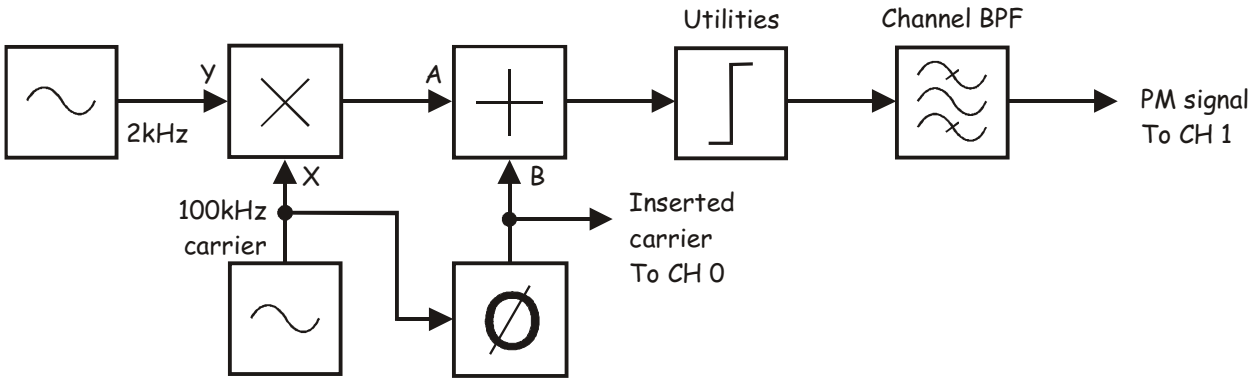

Figure 13

35. Check that the scope's *Trigger Source* is set to *CH 0*.

36. Set the scope's *Timebase* to *5µs/div*.

    Note: Once done, you should see the inserted carrier and the phase modulated carrier.

37. Reduce the effective size of the message signal to zero by reducing the size of the DSBSC signal on the Adder module's output to zero.

    Note: In other words, reduce the gain of the Adder module's *A* input by turning its soft *G* control fully anti-clockwise.

38. Observe the effect that this has had on the PM signal.

39. Now increase the effective size of the message while observing the effect that this has had on the PM signal.

Question 2
Describe what happens to the PM signal's carrier in response to the message.

Question 3

The PM signal's carrier is changing phase which means it must also be changing in another way. What is this change? **Tip:** This isn't mentioned in the preliminary discussion but you can see it if you look at the scope's measurement readout.

Question 4

Explain why this happens.



Ask the instructor to check your work before finishing.

Name: _____

Class: _____

5 - Phase division modulation and demodulation

Experiment 5 – Phase division modulation and demodulation

Preliminary discussion

Not to be confused with phase modulation (also discussed in this manual), phase division modulation (PDM and also known as phase division multiplexing) is a communications technique that allows the allocated bandwidth to be more densely packed with users. Obviously, this is important when the radio frequency spectrum is finite and more and more users demand access to it.

At it simplest, phase division modulation is a variation of the DSBSC modulation scheme that provides for a doubling of the number of potential users. This is achieved by having users share a carrier frequency. This might immediately conjure images of a system of complete confusion. If two users are sharing a carrier, how can receivers distinguish between them?

The key to the answer is the fact that the users' carriers are 90° out of phase with each other (or in *quadrature*). And, a technique called *phase discrimination* is used by receivers to single-out one carrier over the other.

If this reminds you of QPSK then you're right. The difference however, is QPSK is used to reduce the bandwidth requirements for sending digital data whereas PDM is used to allow multiple users to occupy the same portion of the radio frequency spectrum.

To explain how PDM works, Figure 1 below shows the block diagram of its mathematical implementation.

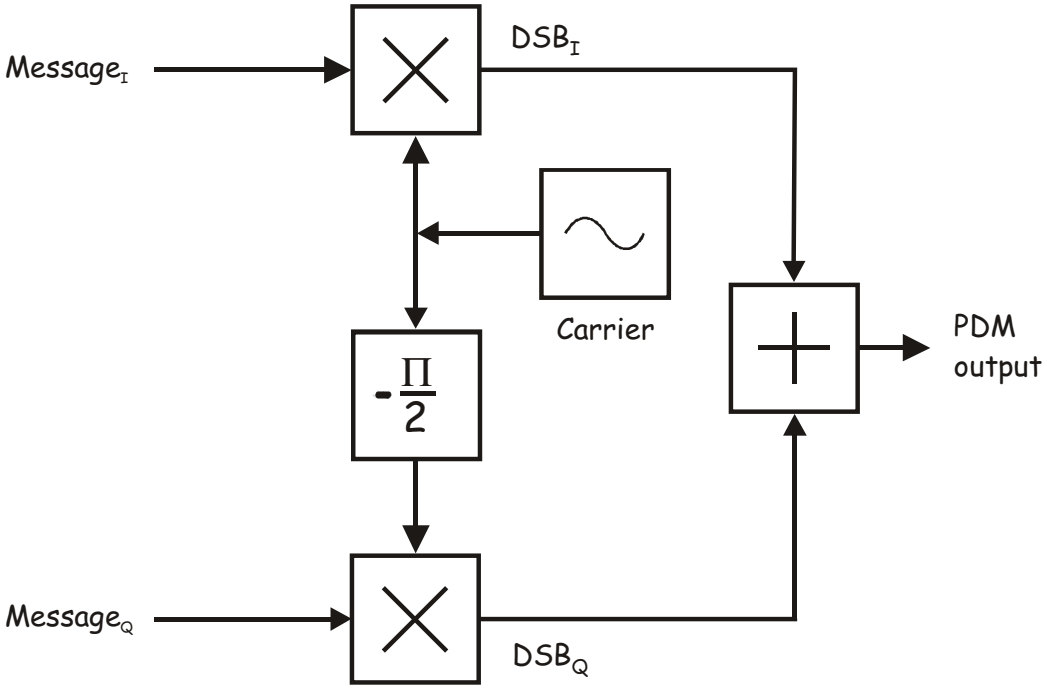

Figure 1

As you can see, the arrangement involves two multipliers each multiplying a unique message with the same carrier but phase separated by 90°. (As an aside, notice that the 90° of phase shift is introduced by a block labelled "minus pi on 2". Engineers use radians when performing communications math and minus pi on 2 is the radian equivalent of ninety in degrees.) As long as the messages contain no DC, this multiplication process produces two DSBSC signals – one is labelled DSB_I and the other is labelled DSB_Q because it is in quadrature with DSB_I.

If the message signals have the same bandwidth (they'll be bandwidth limited using filters to ensure this), the resulting DSBSC signals have an identical bandwidth to each other (and equal to twice the highest frequency in the message). That being the case, when the signals are simply added together at the final stage, they occupy the same portion of the radio frequency spectrum. Despite this, the two sets of signals are not irretrievably mixed.

Figure 2 below shows the block diagram of the mathematical implementation of PDM demodulation.

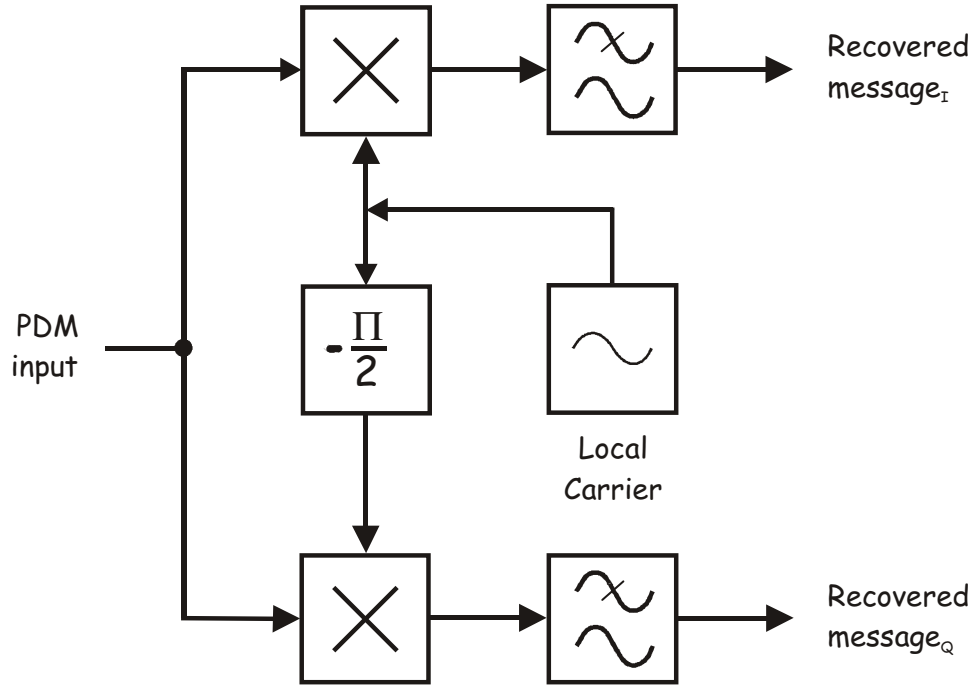

Figure 2

Notice that the arrangement uses two product detectors to simultaneously demodulate the two DSBSC signals that make up the PDM input. Recall that the multiplication of a local carrier with a DSBSC signal generates a number of frequency components with one in particular being at the original message frequency (or frequencies). That being the case, the multipliers' outputs are passed through low-pass filters to recover the copies of the original messages.

 © 2008 Emona Instruments

To understand how one product detector picks-out only DSB_I and the other picks-out only DSB_Q, recall that the product detection of DSBSC signals is phase sensitive. That is, recovery of the message is optimal if the transmitted and local carriers are in phase with each another. But the recovered message is attenuated if the two carriers are not exactly in phase. Importantly, if the phase error is 90° the amplitude of the recovered message is zero. In other words, the message is completely rejected.

The PDM demodulator takes advantage of this fact. Notice that the product detectors in Figure 2 share the carrier but one of them is phase shifted 90°. That being the case, once the phase of the local carrier for one of the product detectors matches the phase of the transmission carrier of one of the DSB signals, there is automatically a 90° phase error between that detector's local carrier and the transmission carrier of the other DSB signal. So, the detector recovers the message from the DSB signal that it's matched to and cancels the message from the other DSB signal.

The experiment

In this experiment you'll use the Emona DATEx to generate a real PDM signal using independent messages by implementing its mathematical model. Once generated, you'll examine the effect of phase division multiplexing on bandwidth. Then, you'll examine how phase discrimination using a product detector can be used to pick-out one message or the other. Finally you replace one of the messages with speech and examine the differences between adjusting the receiver to recover it by visual and aural means.

It should take you about 45 minutes to complete this experiment.

Pre-requisites:

Experiments 1, 2 & 3 (Vol. 1): Intros to the NI ELVIS II, the Emona DATEx and SFP control
Experiment 6 (Vol. 1): DSBSC modulation
Experiment 7 (Vol. 1): Observations of AM & DSBSC signals in the frequency domain (desirable)
Experiment 9 (Vol. 1): DSBSC demodulation

Equipment

- Personal computer with appropriate software installed
- NI ELVIS II plus USB cable and power pack
- Emona DATEx experimental add-in module
- Two BNC to 2mm banana-plug leads
- Assorted 2mm banana-plug patch leads
- One set of headphones (stereo)

Procedure

Part A – Generating a PDM signal

1. Ensure that the NI ELVIS II power switch at the back of the unit is off.

2. Carefully plug the Emona DATEx experimental add-in module into the NI ELVIS II.

3. Set the *Control Mode* switch on the DATEx module (top right corner) to *PC Control*.

4. Connect the NI ELVIS II to the PC using the USB cable.

   Note: This may already have been done for you.

5. Turn on the NI ELVIS II power switch at the rear of the unit then turn on its *Prototyping Board Power* switch at the top right corner near the power indicator.

6. Turn on the PC and let it boot-up.

7. Launch the NI ELVISmx software.

8. Launch and run the NI ELVIS II Function Generator VI.

9. Adjust the function generator for an output with the following specifications:

   - Waveshape: Sine
   - Frequency: 2kHz
   - Amplitude: 4Vpp
   - DC Offset: 0V

10. Connect the set-up as shown in Figure 3 below.

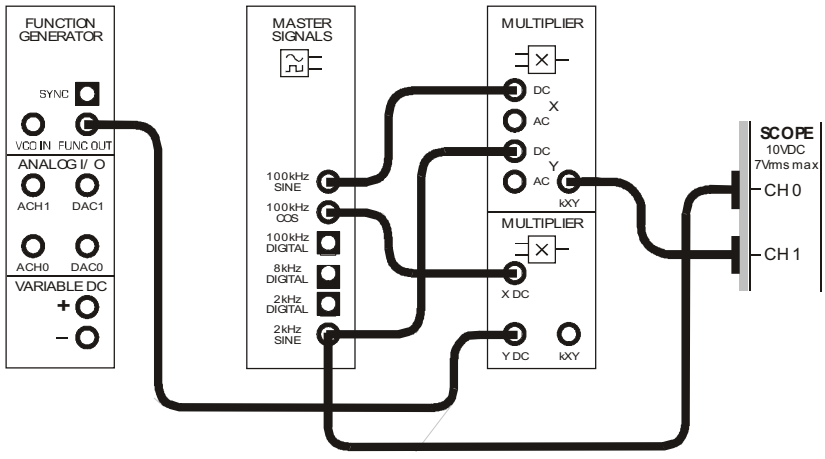

Figure 3

The set-up in Figure 3 can be represented by the block diagram in Figure 4 below. Notice that two unique 2kHz message signals are connected to the input of individual Multiplier modules. Also connected to the Multiplier modules are 100kHz sinewaves for the carriers. However, the carriers are out of phase with each other by 90° which is a requirement of PDM.

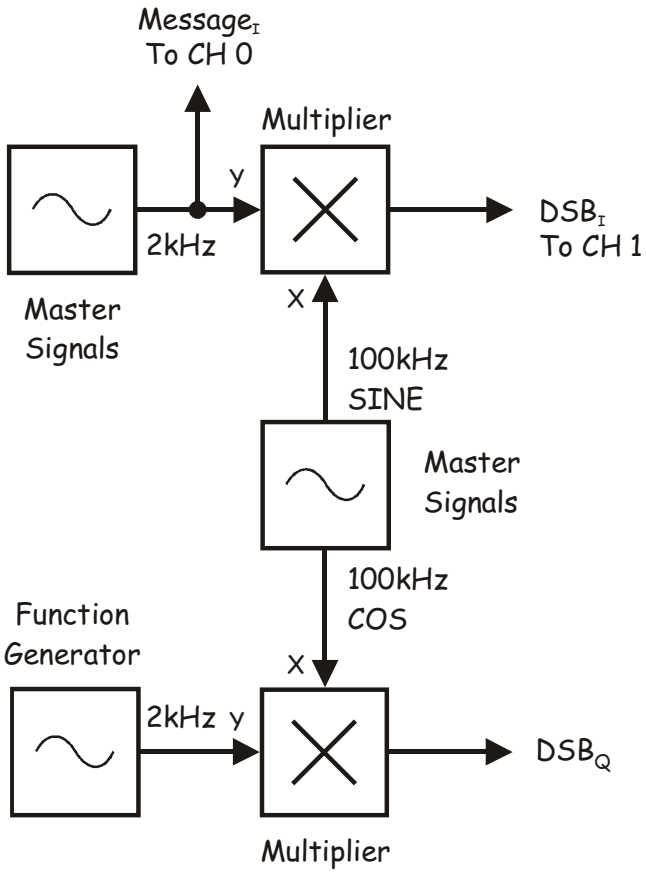

Figure 4

11. Launch and run the NI ELVIS II Oscilloscope VI.

12. Adjust the scope to view two or so cycles of message$_I$ and its corresponding DSB$_I$ signal. Essential scope settings include:

    - *Coupling* for both channels to *AC*
    - *Trigger Type* to *Edge*
    - *Trigger Source* to *CH 0*

13. Verify that the DSB$_I$ signal is DSBSC by checking that alternating halves of its envelope form a copy of message$_I$.

14. Modify the scope's connections to the set-up as shown in Figure 5 below.

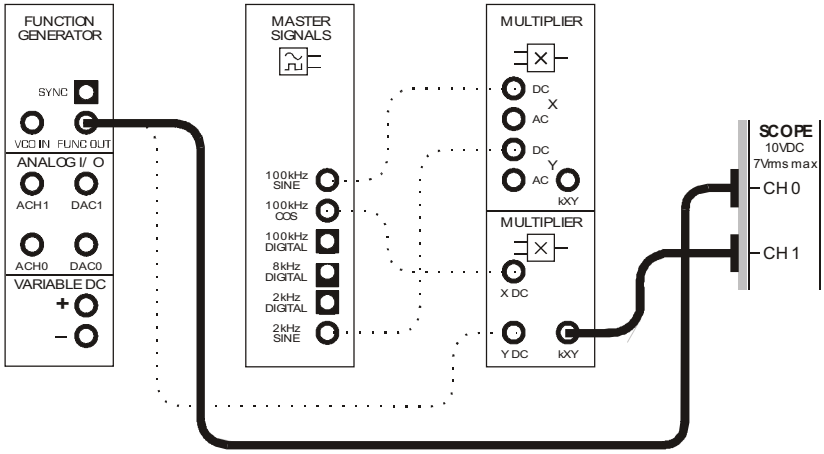

Figure 5

The new scope connections can be shown using the block diagram in Figure 6 below.

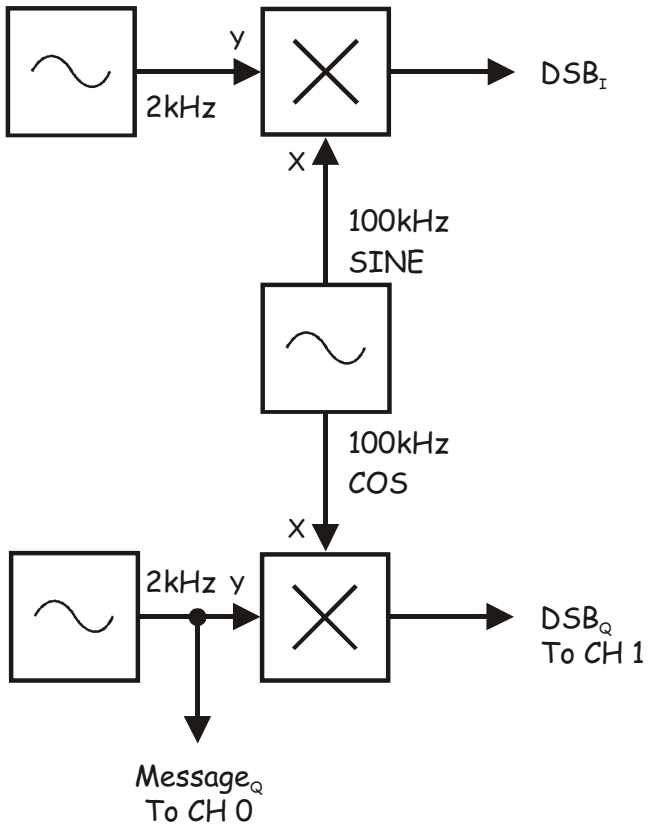

Figure 6

 © 2008 Emona Instruments

15. Verify that the DSB_Q signal is DSBSC by checking that alternating halves of its envelope form a copy of $message_Q$.

Ask the instructor to check your work before continuing.

16. Modify the set-up as shown in Figure 7 below.

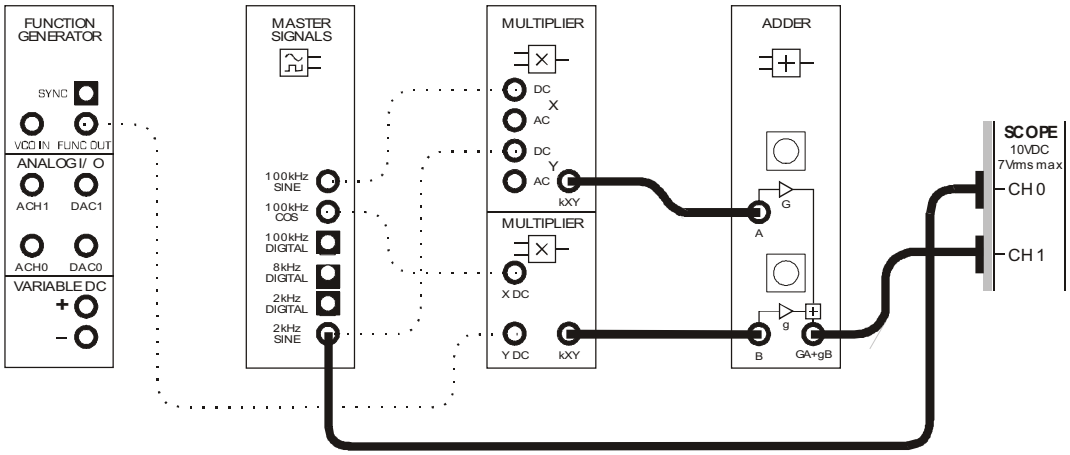

Figure 7

This set-up can be represented by the block diagram in Figure 8 on the next page. The Adder module is used to add the DSB_I and DSB_Q signals and turn the set-up into a complete phase division modulator (PDM).

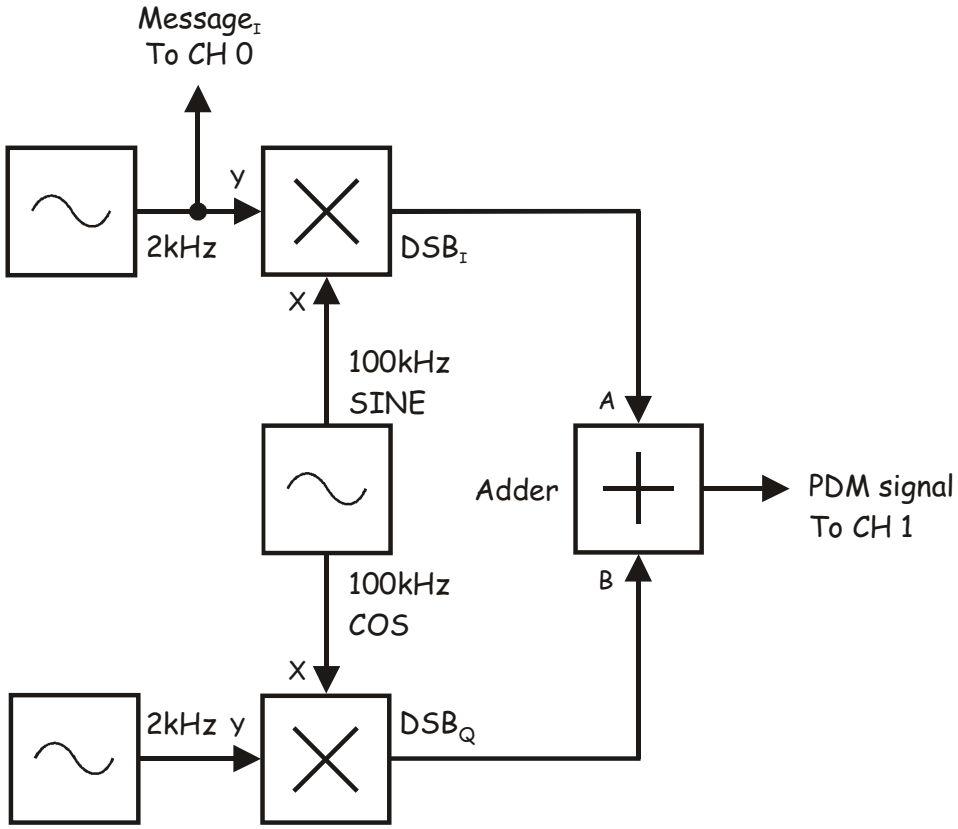

Figure 8

The next few steps get you to adjust the Adder module so that the power densities of the two signals that make up its output are equal.

17. Launch the DATEx soft front-panel (SFP) and check that you have soft control over the DATEx board.

18. Disconnect the patch lead to the Adder module's *A* input.

    Note: This removes the DSB_I signal from the signal on the Adder module's output.

19. Locate the Adder module on the DATEx SFP and adjust its soft *g* control to obtain a 4Vp-p output.

20. Reconnect the patch lead to the Adder module's *A* input.

21. Disconnect the patch lead to the Adder module's *B* input.

Note: This removes the DSB_Q signal from the signal on the Adder module's output.

22. Adjust the Adder module's soft *G* control to obtain a 4Vp-p output.

23. Reconnect the patch lead to the Adder module's *B* input.

Note: When you do this, the signal on the Adder module's output may look a little unusual. This is the interaction between two sets of DSBSC signals where the message of one of them is not synchronised to the carriers.

Question 1
According to the theory, what type of digital signal transmission is now present on the Adder module's output?

Question 2
Would your answer to Question 1 still be true if the Adder module's two gains were different values? Explain your answer.



Ask the instructor to check your work before continuing.

Part B – Observations of PDM bandwidth in the frequency domain

As already mentioned, the advantage of phase division modulation is the fact that two users can transmit signals in the same portion of the radio frequency spectrum. The next part of the experiment lets you see this for yourself using the NI ELVIS II Dynamic Signal Analyzer.

24. Disconnect the patch lead to the Adder module's *A* input.

    Note: This removes the DSB_I signal from the signal on the Adder module's output, effectively turning it into simple DSBSC.

25. Suspend the scope's operation.

    Note: The scope's display should freeze and its hardware has been deactivated. This is a necessary step as the scope and signal analyzer share hardware resources and so they cannot be operated simultaneously.

26. Launch and run the NI ELVIS II Dynamic Signal Analyzer VI.

27. Adjust the signal analyzer's controls as follows:

    Input Settings

    - *Source Channel* to *SCOPE CH 1*
    - Voltage Range to ±10V

    FFT Settings

    - *Frequency Span* to *200,000*
    - *Resolution* to *400*
    - *Window* to *7 Term B-Harris*

    Averaging

    - *Mode* to *RMS*
    - *Weighting* to *Exponential*
    - *# of Averages* to *3*

    Trigger Settings

    - *Type* to *Edge*

    Frequency Display

    - *Units* to *dB*
    - *Mode* to *RMS*
    - *Scale* to *Auto*
    - *Cursors On* box unchecked (for now)

28. Activate the signal analyzer's cursors and use them to determine the bandwidth of the DSBSC signal on the Adder module's output. Record this in Table 1 on the next page.

29. Deactivate the signal analyzer's cursors.

30. Reconnect the patch lead to the Adder module's *A* input while watching the signal analyzer's display carefully.

Note: Reconnecting this lead turns the system back into a phase division modulator and so two separate message signals are being simultaneously transmitted on the one carrier.

31. Activate the signal analyzer's cursors again and use them to determine the bandwidth of the PDM signal on the Adder module's output. Record this in Table 1 also.

Table 1

BW of the DSBSC signal	BW of the PDM signal

Question 3
What effect did turning the Adder module's output from a DSBSC signal into a PDM signal have on its bandwidth? Explain why.

Question 4
Did adding the DSB_I signal have any effect on the Adder module's output? If so, what?

32. Use one of the signal analyzer's cursors to verify your answer to Question 4.



Ask the instructor to check your work before continuing.

© 2008 Emona Instruments

Part C – Using phase discrimination to demodulate PDM signals

The next part of the experiment demonstrates how phase discrimination is used by a phase division demodulator to pick-out one or other of the two DSB signals that make up the PDM signal.

33. Close signal analyzer's VI.

34. Locate the Phase Shifter module on the DATEx SFP and set its soft *Phase Change* control to the *0°* position.

35. Locate the Tuneable Low-pass Filter module on the DATEx SFP and set its soft *Gain* control to about the middle of its travel.

36. Turn the Tuneable Low-pass Filter module's soft *Frequency Adjust* control fully clockwise.

37. Modify the set-up as shown in Figure 9 below.

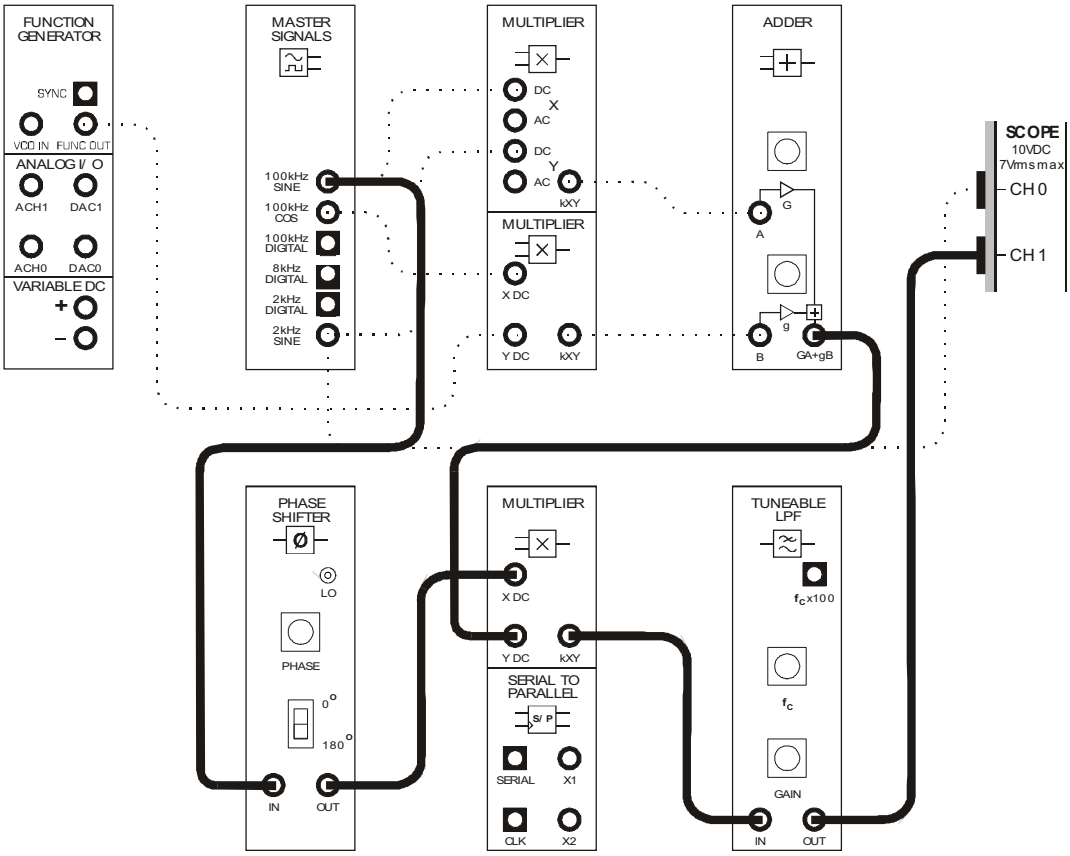

Figure 9

 © 2008 Emona Instruments

The additions to the set-up in Figure 9 can be represented by the block diagram in Figure 10 below. If you compare the block diagram to Figure 2 in the preliminary discussion, you'll notice that it implements one arm of a two-channel phase division demodulator (to demodulate either I or Q).

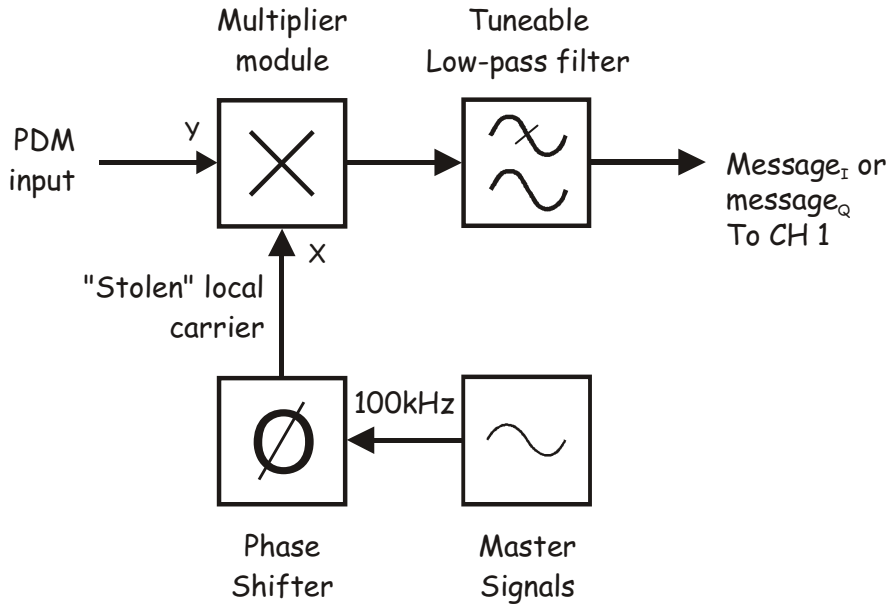

Figure 10

38. Set the function generator's output frequency to 1kHz.

    Note: The will make the two message signals different and identifiable on the demodulator's output. Message$_I$ is still 2kHz but message$_Q$ is now 1kHz.

39. Restart the scope's VI.

40. Compare message$_I$ with the Tuneable Low-pass Filter module's output.

41. Adjust the Phase Shifter module's soft *Phase Adjust* control until you obtain a stable copy of message$_I$ (ignoring phase shift).

    Tip: Use the keyboard's TAB and arrow keys to make fine adjustment of this control.

Question 5

What is the present phase relationship between the local carrier and the carrier signals used to generate the DSB_I and DSB_Q signals?

42. Modify the scope's Channel 0 connection to set-up as shown in Figure 11 below.

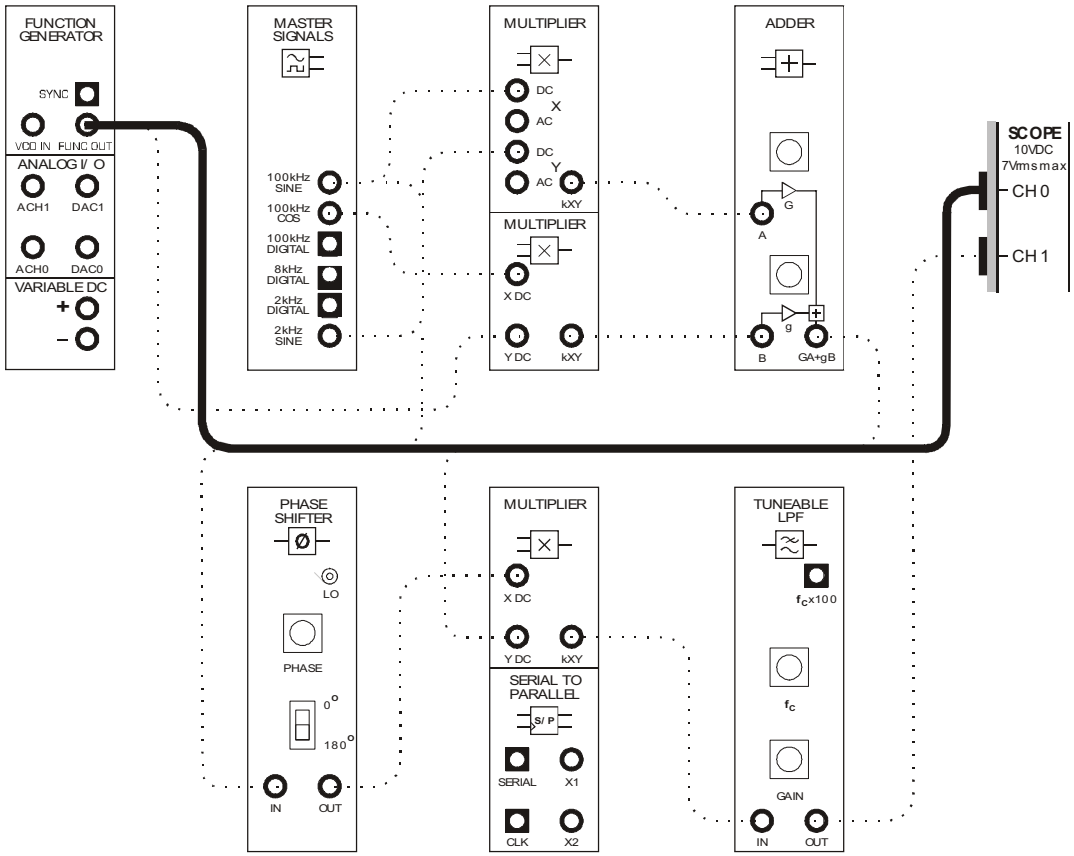

Figure 11

43. Adjust the Phase Shifter module's soft *Phase Adjust* control until you obtain a copy of $message_Q$.

Note: You'll not obtain a stable trace for $message_Q$ because the function generator's output isn't synchronised to the signals generated by the DATEx.

Question 6

What is the present phase relationship between the local carrier and the carrier signals used to generate the DSB_I and DSB_Q signals?

Ask the instructor to check your work before continuing.

You've just "tuned" the receiver to select either $message_I$ or $message_Q$ by visual means. Now let's see what you're hearing tells you.

44. Modify the set-up as shown in Figure 12 below.

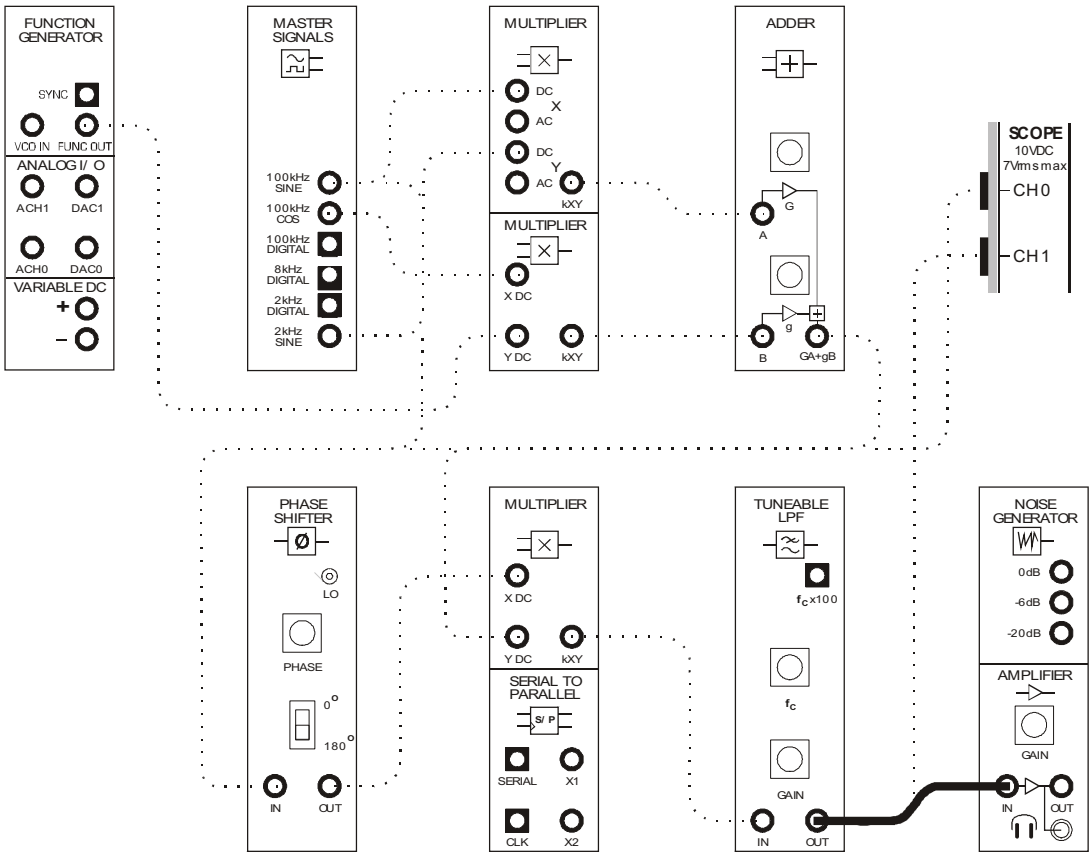

Figure 12

45. Locate the Amplifier module on the DATEx SFP and turn its soft *Gain* control fully anti-clockwise.

46. Without wearing the headphones, plug them into the Amplifier module's headphone socket.

47. Put the headphones on.

48. Increase the Amplifier module's gain until you can comfortably hear $message_Q$.

49. Use the Phase Shifter module's soft *Phase Adjust* control to select $message_I$ exclusively then back to $message_Q$.

Question 7
Why is it possible to hear both messages when your demodulator is not exclusively selecting just one of them?



Ask the instructor to check your work before continuing.

Our hearing is highly sophisticated and one of our more sensitive senses. Let's put it to use here to tune the demodulator to when one of the messages is a more complex signal.

50. Use the Phase Shifter module's soft *Phase Adjust* control to select $message_I$.

51. Set the scope's *Timebase* control to *2ms/div*.

52. Replace $message_Q$ (the signal from the function generator) with the output from the Speech module.

53. Take the headphones off for a moment.

54. Talk and hum into the microphone while trying to recover $message_Q$ (**without** using the headphones).

55. Put the headphones back on and try recovering $message_Q$ using your hearing.

Question 8
Why do you think our hearing is so much more effective for this purpose than looking at the scope's display?



Ask the instructor to check your work before finishing.

Name: _____

Class: _____

6 - Pulse-width modulation and demodulation

Experiment 6 – Pulse-width modulation and demodulation

Preliminary discussion

As you know, when an analog signal is periodically sampled, the sampled signal is a complex waveform that consists of the original analog signal plus aliases (also known as *images*). This has been comprehensively demonstrated in another DATEx experiment using pulse amplitude modulation (PAM) but the fact is true for all pulse modulation schemes.

Another type of pulse modulation is called pulse-width modulation (PWM) or sometimes pulse-duration modulation (PDM). To understand PWM, let's consider a simple method for generating it that involves a comparator with a sawtooth waveform for one of its inputs. This is shown in Figure 1 below.

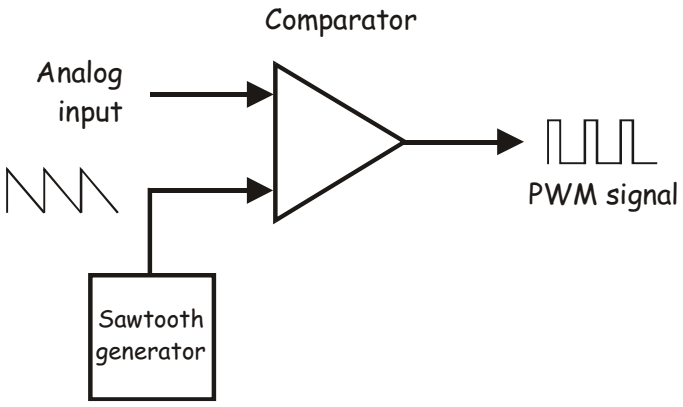

Figure 1

Recall that the comparator amplifies the difference between the voltages on its two inputs by an extremely large amount. So, when the instantaneous analog voltage is smaller than the instantaneous sawtooth voltage, the comparator's output is logic-0. And when the instantaneous analog voltage is larger than the instantaneous sawtooth voltage, the comparator's output is logic-1. That being the case, the comparator's output is a pulse train with a pulse-width that is a function of the size of the voltage on the analog input. Figure 2 on the next page demonstrates this by comparing the comparator's output for two DC voltages on the analog input.

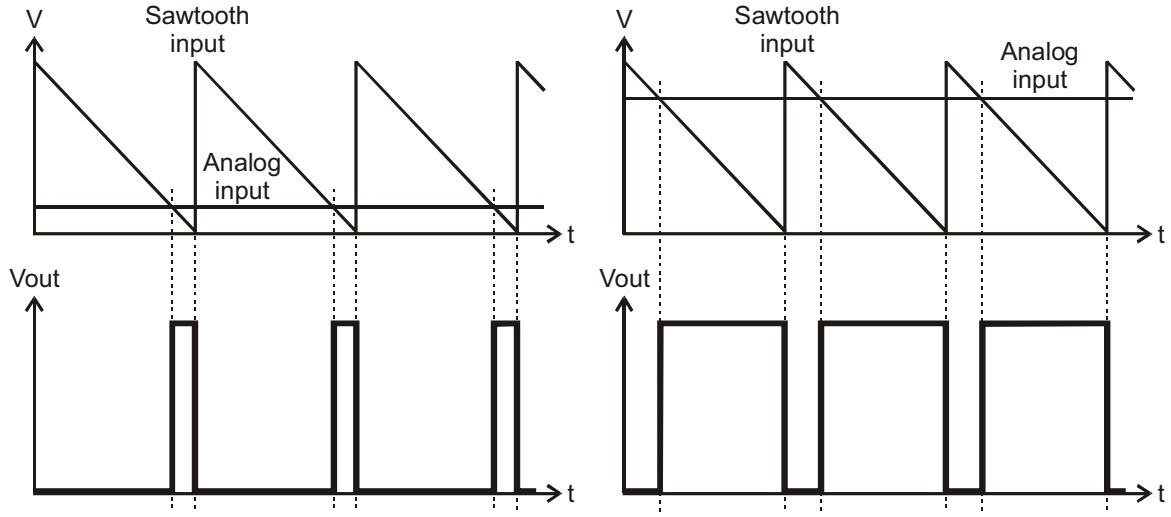

Figure 2

An example of the effect on the comparator's output for a sinewave analog input is shown in Figure 3 below.

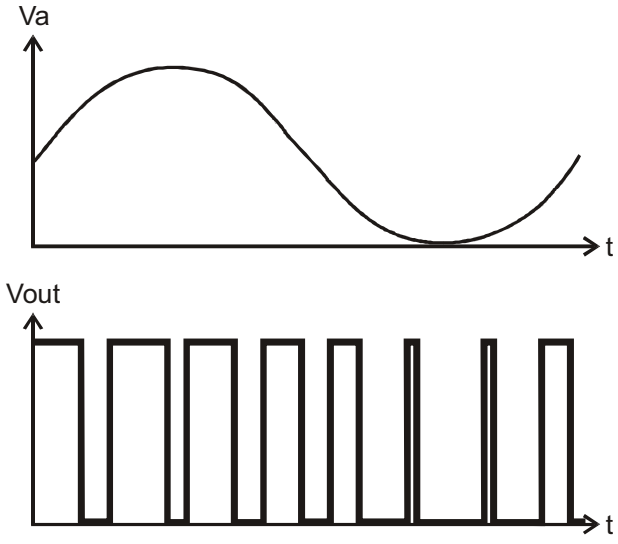

Figure 3

At this point it's useful to highlight the difference between PWM and PAM signals in the time domain. Recall that PAM produces a series of pulses with a fixed width but with an amplitude that is proportional to the instantaneous analog input voltage (for an example see Volume 1, Experiment 13, Figure 1b). PWM on the other hand produces a series of pulses at only one voltage (other than zero) but with a pulse-width that is proportional to the instantaneous analog input voltage.

A comparison of PWM and PAM signals in the frequency domain shows an interesting similarity between the two but also a critical difference. Both signals contain a copy of the original message and they both contain modulated carriers at each of the pulse's harmonics. However, the modulation of these "harmonic carriers" is different. The mathematical analysis of PAM signals shows that their harmonic carriers are DSBSC modulated (for an explanation of why, refer to Volume 1, Experiment 13). Whereas the mathematical analysis of PWM signals (not provided here) shows that their harmonic carriers are phase modulated. As such, the signals' spectra are quite different which explains why the signals look so different in the time domain.

Despite the differences in the spectral composition of PWM and PAM signals, the fact that they both contain a copy of the message means that the message can be recovered in the same way (that is, by using a low-pass filter). Of course, for this demodulation technique to work, the Nyquist Sample Rate must be observed in the first instance.

The experiment

For this experiment you'll set up a pulse-width modulator (PWM) using the Emona DATEx comparator module. You'll then verify its operation and determine its limits using a DC input voltage. Next you'll observe the PWM's operation for an AC message signal using a 2kHz tone then speech. Finally, you'll investigate the effects of reducing the effective sample rate below the Nyquist Sample Rate for the message.

It should take you about 1 hour to complete this experiment.

Pre-requisites:

Experiments 1, 2 & 3 (Vol. 1): Intros to the NI ELVIS II, the Emona DATEx and SFP control
Experiment 13 (Vol. 1): Sampling and reconstruction

Equipment

- Personal computer with appropriate software installed
- NI ELVIS II plus USB cable and power pack
- Emona DATEx experimental add-in module
- Two BNC to 2mm banana-plug leads
- Assorted 2mm banana-plug patch leads
- One set of headphones (stereo)

Procedure

Part A - Generating the sawtooth waveform

A sawtooth waveform is needed for one of the inputs to the comparator to turn it into a pulse-width modulator. This part of the experiment gets you to set one up.

1. Ensure that the NI ELVIS II power switch at the back of the unit is off.

2. Carefully plug the Emona DATEx experimental add-in module into the NI ELVIS II.

3. Set the *Control Mode* switch on the DATEx module (top right corner) to *PC Control*.

4. Connect the NI ELVIS II to the PC using the USB cable.

   Note: This may already have been done for you.

5. Turn on the NI ELVIS II power switch at the rear of the unit then turn on its *Prototyping Board Power* switch at the top right corner near the power indicator.

6. Turn on the PC and let it boot-up.

7. Launch the NI ELVISmx software.

8. Launch the DATEx soft front-panel (SFP) and check that you have soft control over the DATEx board.

9. Locate the Twin Pulse Generator module on the DATEx SFP and turn its soft *Width* control fully anti-clockwise.

10. Set the Twin Pulse Generator module's soft *Delay* control fully anti-clockwise.

11. Connect the set-up shown in Figure 4 below.

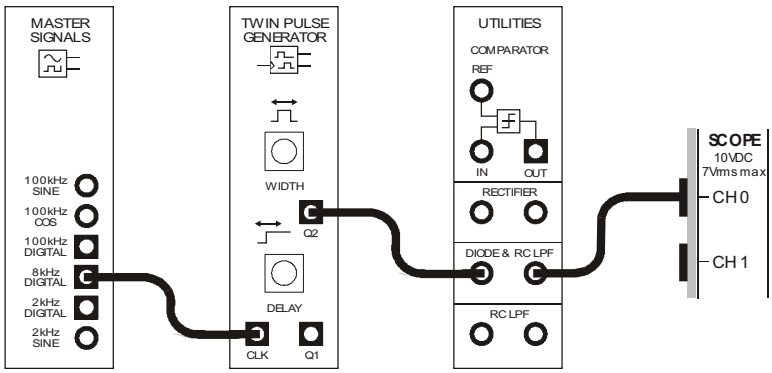

Figure 4

The set-up in Figure 4 can be represented by the block diagram in Figure 5 below.

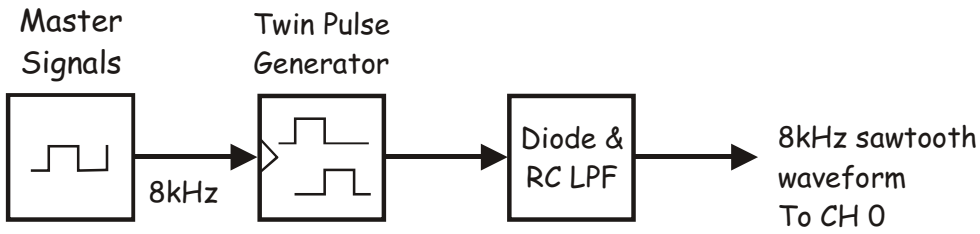

Figure 5

12. Launch and run the NI ELVIS II Oscilloscope VI.

13. Adjust the scope to view the Diode & RC LPF module's output as an appropriate display. Essential scope settings include:

    - *Coupling* for both channels to *DC*
    - *Timebase* to *100µs/div*
    - *Trigger Type* to *Edge*
    - *Trigger Source* to *CH 0*
    - *Trigger Level* to *2.5V*

14. Activate the scope's cursors and use one of them to determine the absolute value of the sawtooth waveform's lower and upper peaks. Record this information in Table 1 below.

    Note: This information is needed later as the lower and upper peaks of the analog input voltage should not exceed these values.

Table 1

Absolute value of the lower peak	Absolute value of the upper peak



Ask the instructor to check your work before continuing.

© 2008 Emona Instruments

Part B – Verifying the operation of the PWM using a DC analog input voltage

The next part of the experiment gets you to verify the operation of the comparator as a pulse-width modulator using a DC analog input voltage. You'll also experimentally determine the lower and upper threshold voltages of the analog input that the PWM can reliably convert.

15. Deactivate the scope's cursors.

16. Modify the set-up as shown in Figure 6 below.

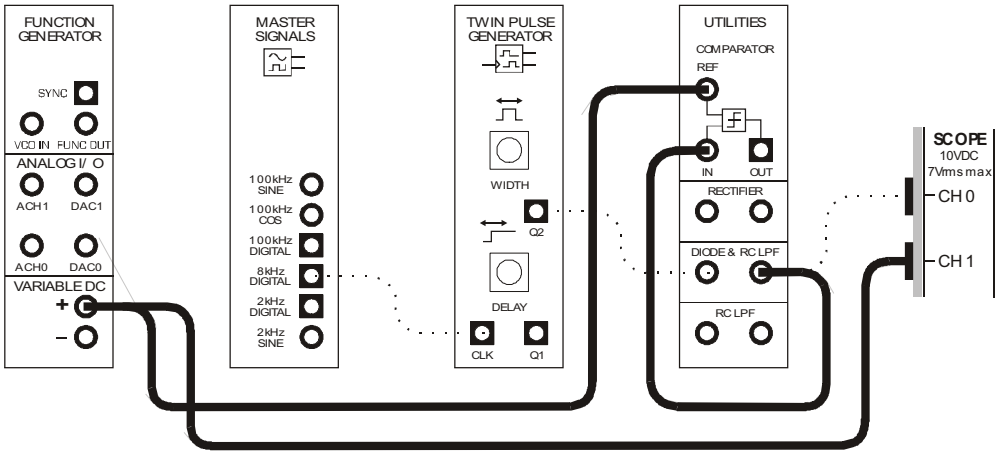

Figure 6

This set-up can be represented by the block diagram in Figure 7 below.

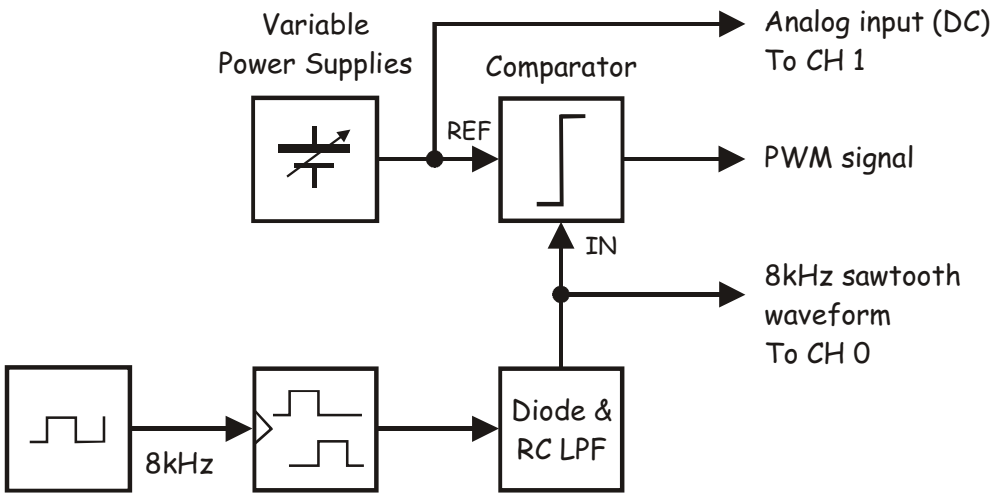

Figure 7

17. Activate the scope's Channel 1 input.

18. Launch and run the NI ELVIS II Variable Power Supplies VI.

19. Adjust the Variable Power Supplies positive output *Voltage* over the range of values recorded in Table 1 using 0.1V or 0.2V increments.

    Note: As you do, you should see the DC analog input voltage vary between the sawtooth waveform's peaks.

20. Adjust the Variable Power Supplies positive output so that it's fractionally above the sawtooth waveform's lower peak.

21. Modify the set-up as shown in Figure 8 below.

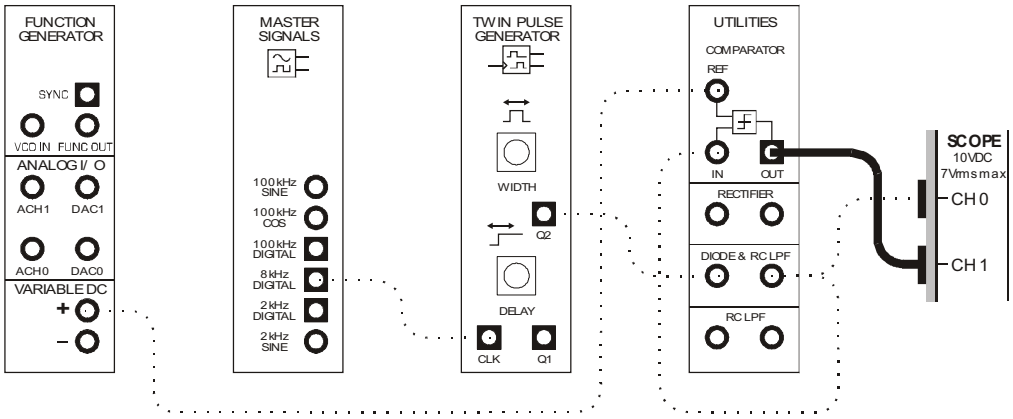

Figure 8

© 2008 Emona Instruments

The new scope connections in Figure 8 can be shown using the block diagram in Figure 9 below.

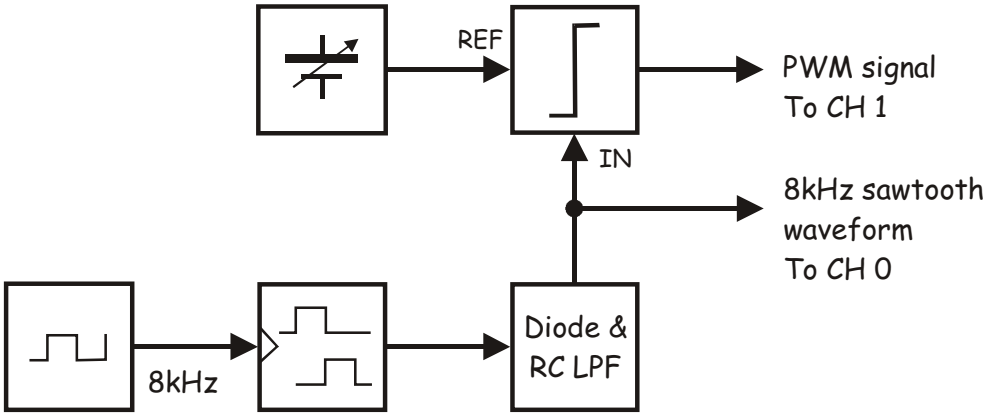

Figure 9

22. Repeat Step 19 and note the effect on the pulse-width modulator's output.

Question 1
What is the relationship between the analog input voltage and the mark-space ratio (that is, the duty cycle) of the PWM's output.

23. Vary the Variable Power Supplies positive output above and below the sawtooth waveform's peak voltages and note the effect on the pulse-width modulator's output.

Question 2
Why is it critical to ensure that the analog input voltage doesn't exceed the sawtooth waveform's peak voltages?

Ask the instructor to check your work before continuing.

Part C – PWM operation with an AC analog input signal (a "message")

The next part of the experiment gets you to verify the operation of the pulse-width modulator using an AC analog input voltage for the message. Specifically, you'll use a 2kHz sinewave. However, before you do, the analog input must be adjusted so that it changes only over the range of the sawtooth waveform's peaks.

24. Locate the Adder module on the DATEx SFP and turn its soft *G* and *g* controls fully anti-clockwise.

25. Disconnect the plug to the Variable Power Supplies' positive output voltage and modify the set-up as shown in Figure 10 below.

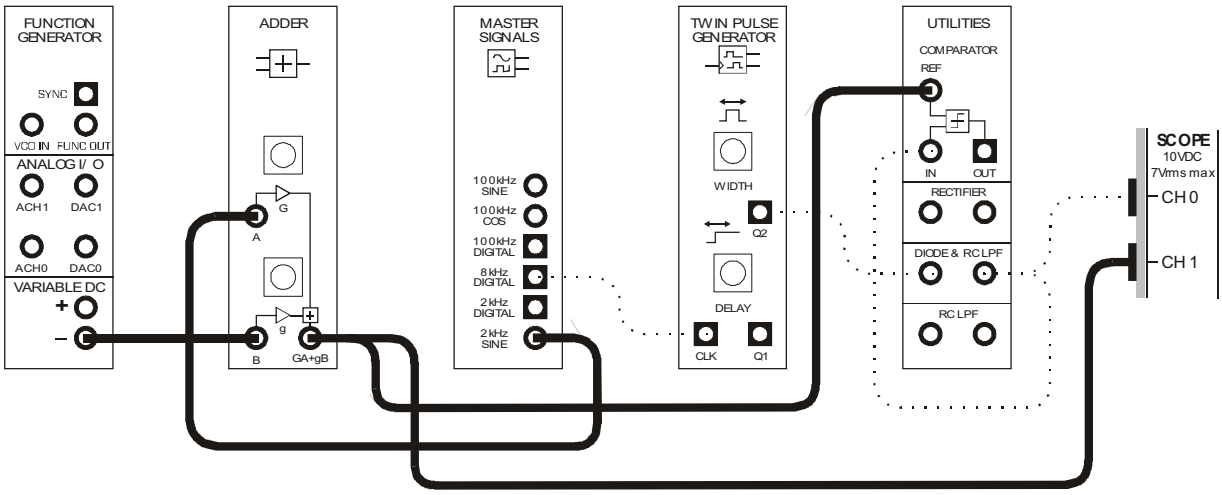

Figure 10

The change to this set-up can be represented by the block diagram in Figure 11 on the next page. The Master Signals module's 2kHz SINE output is connected to the pulse-width modulator's input via the Adder module. The Adder module is used to add a DC offset to the sinewave to push it up between the sawtooth waveform's peaks. Also, notice that you're using the Variable Power Supplies' negative output voltage. This is because the Adder module's gain is negative and so the final DC offset is positive as required.

© 2008 Emona Instruments

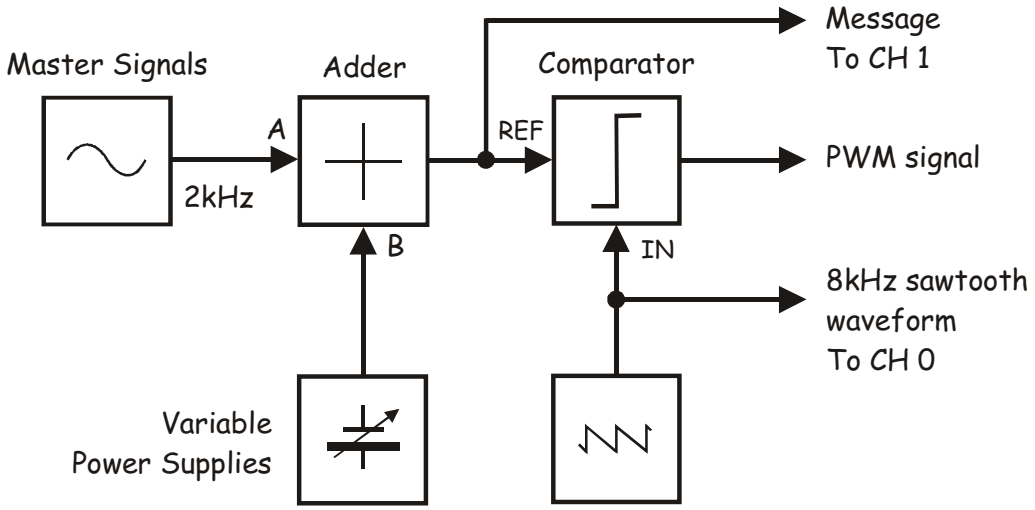

Figure 11

26. Set the Variable Power Supplies negative output for about -3V (the exact value isn't critical).

27. Disconnect the lead to the Adder module's A input.

    Note: This completely removes the message from the Adder module's output so that the DC offset can be set to the correct level.

28. Adjust the Adder module's soft *g* control to obtain DC output that is exactly half way between the sawtooth waveform's peaks.

    Tip: Use a little math here rather than doing this by visual inspection. The values in Table 1 should help.

29. Reconnect the lead to the Adder module's A input.

30. Adjust the Adder module's soft *G* control to obtain a sinewave with the same amplitude as the sawtooth waveform.

    Tip: Again, there's no need to do this by visual inspection. The scope measures and displays both signals' peak-to-peak voltages.

31. Make a note of the position of the Adder module's soft *G* control.

    Tip: To help you remember this, relate the control's marker position to the numbers on the face of a clock.

32. Modify the set-up as shown in Figure 12 below.

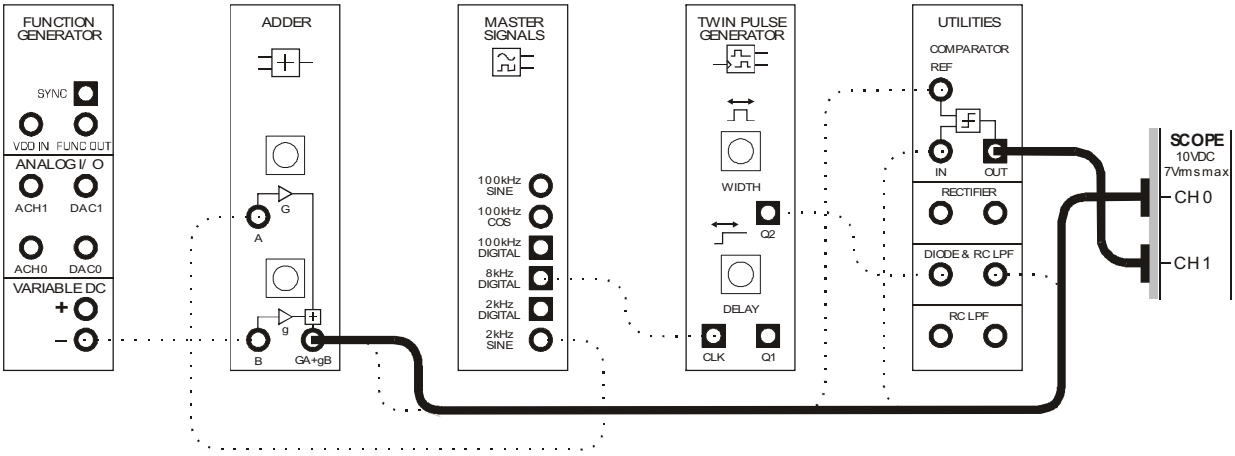

Figure 12

The new scope connections can be shown using the block diagram in Figure 13 below.

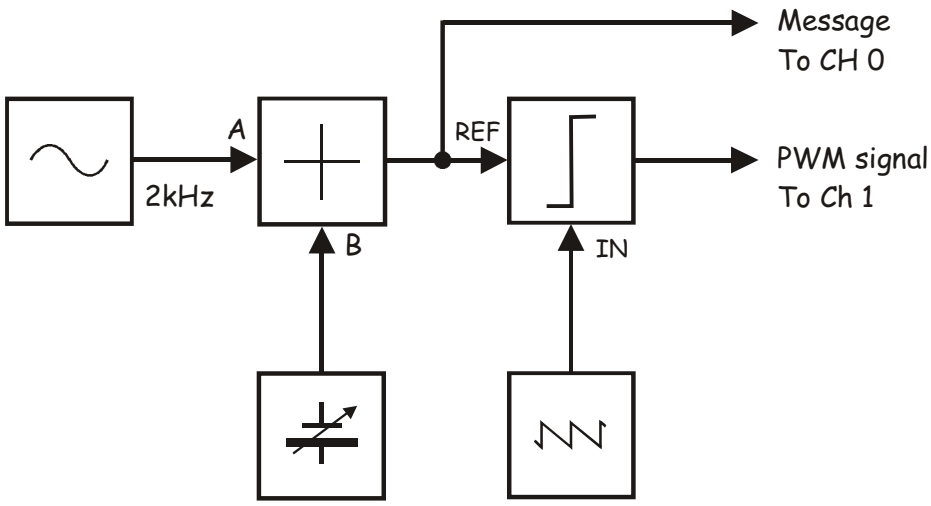

Figure 13

© 2008 Emona Instruments

33. Observe the pulse-width modulator's output. Pay particular attention to the signal's mark-space ratio relative to the message.



Ask the instructor to check your work before continuing.

Question 3
In relation to the message, when is the PWM signal's mark-space ratio biggest?

34. Vary the Adder module's soft *G* control to vary the amplitude of the message and observe the effect on the pulse-width modulator's output.

Note: Take care not to exceed the gain setting you noted for Step 31.

Question 4
Why does the mark-space ratio of the PWM's output signal become more uniform as the size of the message is reduced?

35. Set the Adder module's soft *G* control to just below the setting you noted for Step 31.

36. Suspend the scope's operation by clicking on its *Stop* control once.

Note: The scope's display should freeze and its hardware has been deactivated. This is a necessary step as the scope and signal analyzer share hardware resources and so they cannot be operated simultaneously.

37. Launch and run the NI ELVIS II Dynamic Signal Analyzer.

38. Adjust the signal analyzer's controls as follows:

Input Settings

- *Source Channel* to *SCOPE CH 1*
- Voltage Range to ±10V

FFT Settings

- *Frequency Span* to *20,000*
- *Resolution* to *400*
- *Window* to *7 Term B-Harris*

Averaging

- *Mode* to *RMS*
- *Weighting* to *Exponential*
- *# of Averages* to *3*

Trigger Settings

- *Type* to *Immediate*

Frequency Display

- *Units* to *dB*
- *Mode* to *RMS*
- *Scale* to *Auto*
- *Cursors On* box unchecked (for now)

39. Use one of the signal analyzer's cursors to identify the spectral component in the PWM signal that is a copy of the message.

40. Vary the Adder module's soft *G* control to vary the amplitude of the message and observe the effect on the sinewave you identified in the previous step.

Note: Again, take care not to exceed the gain setting you noted for Step 31.

Question 5
Why does varying the size of the message affect the size of its copy in the PWM signal?
Tip: This is a difficult question – think about it.

Ask the instructor to check your work before continuing.

Part D – Recovering the AC analog input voltage

As you have just seen, the pulse-width modulator output signal's spectral composition includes a copy of the original message. So, assuming the Nyquist Sample Rate has been observed, it is a relatively simple matter to recover the message using a low-pass filter. The next part of the experiment demonstrates this.

41. Close the signal analyzer's VI.

42. Restart the scope's VI.

43. Set the scope's *Timebase* control to the *200µs/div* position.

44. Locate the Tuneable Low-pass Filter module on the DATEx SFP and set its soft *Gain* control to about the middle of its travel.

45. Turn the Tuneable Low-pass Filter module's soft *Cut-off Frequency Adjust* control fully anti-clockwise.

46. Modify the set-up as shown in Figure 14 below.

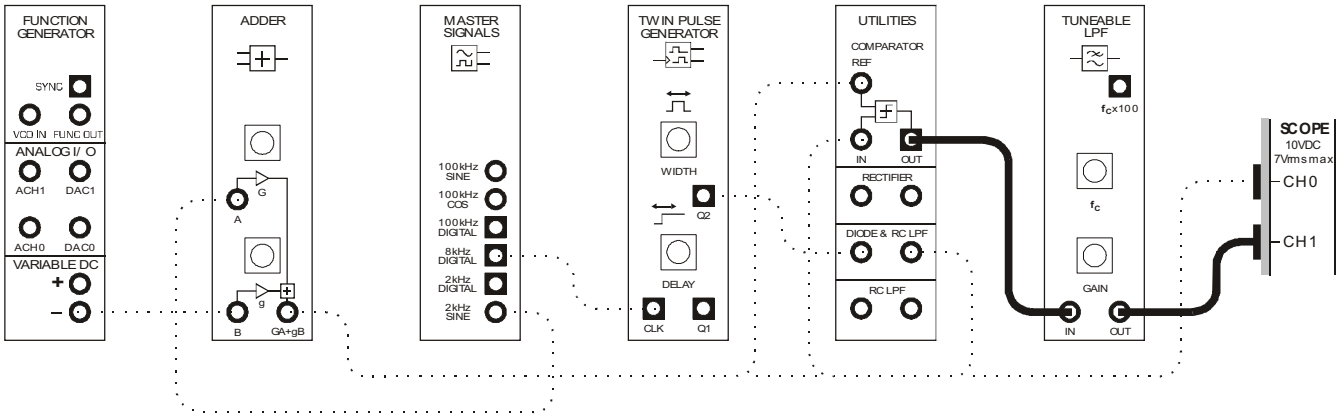

Figure 14

The set-up in Figure 14 can be represented by the block diagram in Figure 15 below. The Tuneable Low-pass Filter module is being used to pick-out the copy of the original message that's makes up PWM output signal's spectrum.

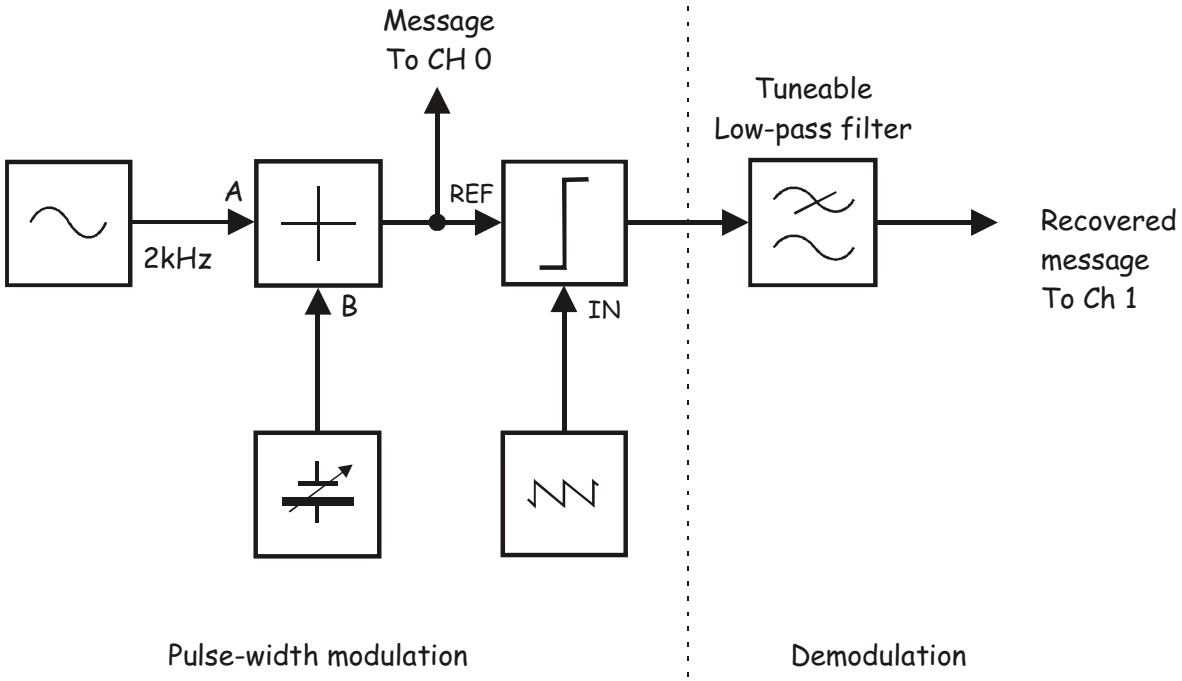

Figure 15

47. Increase the Tuneable Low-pass Filter module's cut-off frequency until the message is recovered (ignoring any phase shift).

    Note: If the recovered signal is clipped, reduce the Tuneable Low-pass Filter module's gain.

48. Add the Amplifier module to the set-up as shown in Figure 16 below leaving the scope's connections as they are.

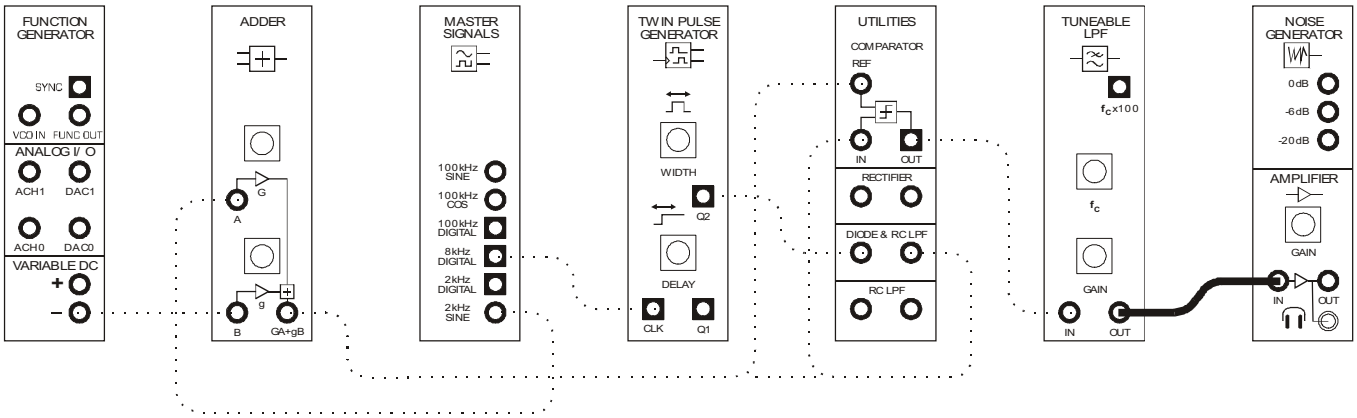

Figure 16

49. Locate the Amplifier module on the DATEx SFP and turn its soft *Gain* control fully anti-clockwise.

50. Without wearing the headphones, plug them into the Amplifier module's headphone socket.

51. Put the headphones on.

52. Increase the Amplifier module's gain until you can comfortably hear the recovered message.

53. Commit the message's sound to memory.

54. Disconnect the Amplifier module's lead where it plugs to the Tuneable Low-pass Filter module's output and connect it to the Master Signals module's *2kHz SINE* output.

55. Compare the sound of the two signals, they should be very similar.

56. Reconnect the Amplifier module to the Tuneable Low-pass Filter module's output and use your hearing to adjust the module's cut-off frequency for the most faithful reproduction of the original message.



Ask the instructor to check your work before continuing.

57. Vary the Adder module's soft *G* control to vary the amplitude of the original message while watching the scope's display and listening with the headphones.

    Note: Take care not to exceed the gain setting you noted for Step 31.

58. Turn the Adder module's soft *G* control so that you exceed the gain setting you noted for Step 31.

    Question 6
    Why doesn't the volume change when you exceed the setting you noted for Step 31?

So far, this experiment has generated a PWM signal using a sinewave for the message and has used a low-pass filter to recover it. However, the message in commercial communications systems is much more likely to be speech and music. The next part of the experiment lets you modify the set-up to modulate and demodulate speech.

59. Turn the Adder module's soft *G* control to return the gain to a level just below the gain setting you noted for Step 30.

60. Disconnect the plug on the Master Signals module's *2kHz SINE* output that connects to the Adder module's *A* input.

61. Connect it to the Speech module's output.

62. Set the scope's *Timebase* control to the *2ms/div* position.

63. Hum and talk into the microphone while watching the scope's display and listening with the headphones.

    Note: The scope may lose triggering when you stop talking. If this happens, starting talking again!



Ask the instructor to check your work before continuing.

© 2008 Emona Instruments

Part E – The effect of not satisfying the Nyquist Sample Rate

The Nyquist Sample Rate dictates that the sawtooth waveform's frequency must be at least twice the message frequency. The next part of this experiment gets you to see what happens when this condition is not satisfied.

64. Disconnect the plug to the Speech module and reconnect it to the Master Signals module's *2kHz SINE* output.

65. Return the scope's *Timebase* control to the *200µs/div* position.

    Note: The scope's display should now be showing the original message and the recovered version of it.

66. Leave the connections to the Amplifier module as they are – You'll be using the headphones again shortly.

67. Launch and run the NI ELVIS II Function Generator VI.

68. Adjust the function generator for an 8.3333kHz output.

    Note: It's not necessary to adjust any other controls as the function generator's *SYNC* output will be used and this is a digital signal.

69. Disconnect the plug to the Master Signals module's *8kHz DIGITAL* output and modify the set-up as shown in Figure 17 below.

    Note: Once done, you should still be able to see the recovered message on the scope and hear it with the headphones.

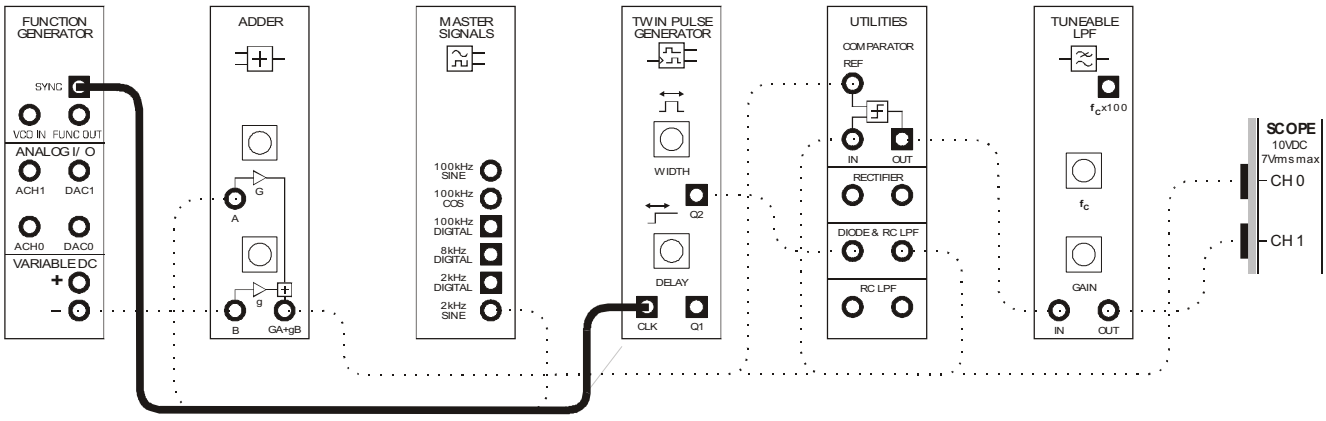

Figure 17

The set-up in Figure 17 can be represented by the block diagram in Figure 18 below. The function generator is being used to generate the sawtooth waveform so that its frequency can be varied and the effects of this observed and heard.

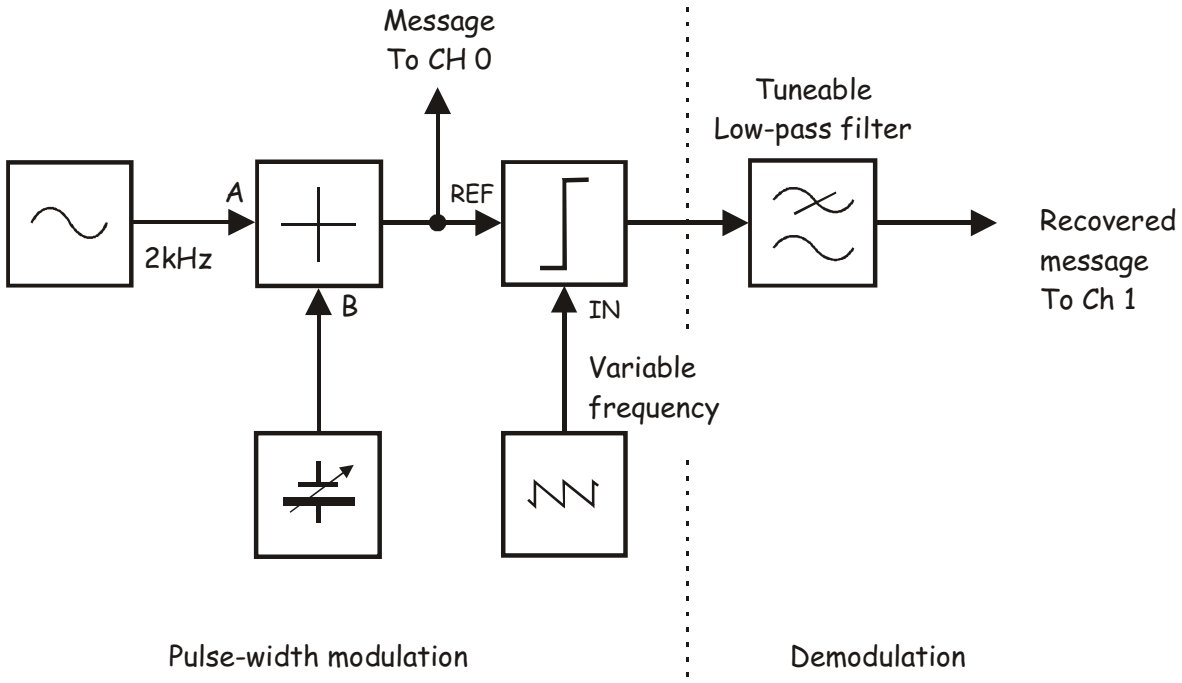

Figure 18

70. Reduce the function generator's output frequency to 7kHz.

71. If the sound and/or shape of the recovered message changes, fine-tune the Tuneable Low-pass Filter module's cut-off frequency to obtain the most faithful reproduction of the original message that you can.

    Tip: Use the keyboard's TAB and arrow keys to make fine adjustment of this control.

72. Reduce the function generator's output frequency in 1kHz steps repeating Step 71 as necessary.

    Note: As you do, you'll find it harder and harder to obtain a clear reproduction of the original message.

73. Stop when the function generator's output frequency is 3kHz.

    Note: You should now find it impossible to obtain a clear reproduction of the original message. In addition, you'll find that the recovered message's shape on the scope is distorted.

Question 7
What's the name of this distortion?

Question 8
Describe the spectral composition of Tuneable Low-pass Filter module's output.



Ask the instructor to check your work before finishing.

Name: _____

Class: _____

7 - Message translation and inversion

Experiment 7 – Message translation and inversion

Preliminary discussion

Message translation (or *frequency translation*) is the name for the effect where modulation schemes reproduce a copy of the message signal but shifted up or down the frequency spectrum. To elaborate, Figure 1 below shows the spectral composition of a message signal such as speech.

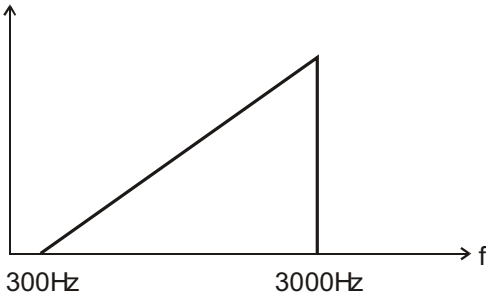

Figure 1

Figures 2a, 2b, 2c and 2d below show the spectral composition obtained when the message in Figure 1 is used to AM, DSBSC and SSBSC modulate a 100kHz carrier.

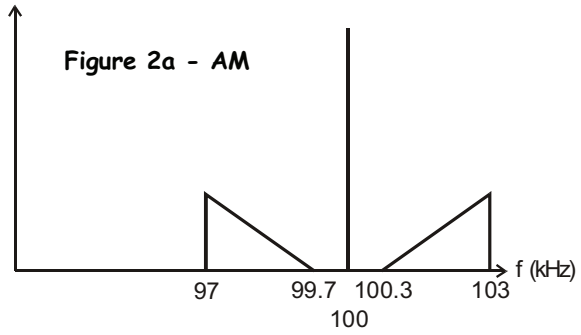

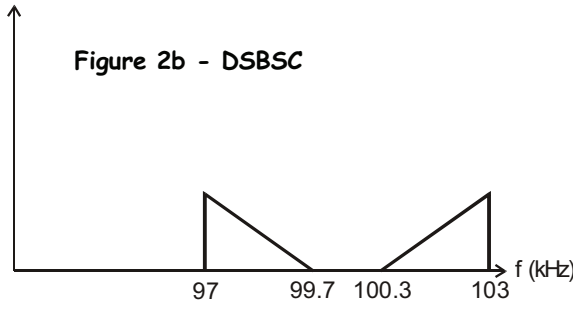

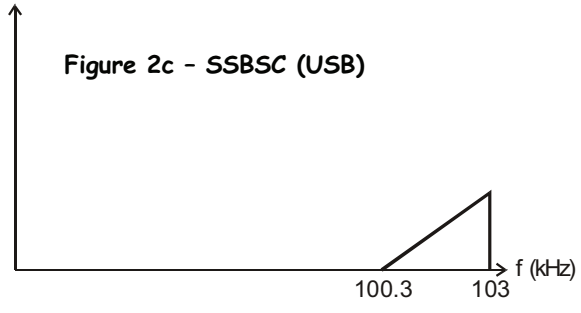

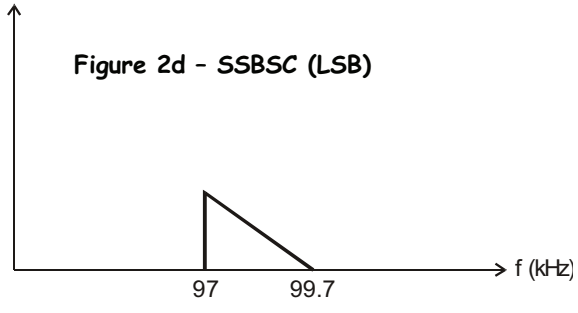

As you can see, Figures 2a, 2b and 2c show that all three systems produce a set of sinewaves with the same energy distribution pattern as the message but between 100.3kHz and 103kHz. In other words, the message has been translated up the frequency spectrum (by 100kHz in this example). Frequency translation can also be used to shift signals down the frequency spectrum and this is done in AM and FM receivers to translate the received signal's carrier and sidebands down to the receiver's intermediate frequency (the IF frequency).

If you look again at Figures 2a, 2b and 2d you'll notice that the three modulation schemes also produce a set of sinewaves between 97kHz and 99.7kHz (for the message and carrier frequencies mentioned previously). Interestingly, these are frequency translated copies of the message also but with an important difference – they have an energy distribution pattern that is the mirror image of the message signal's energy distribution pattern. That is, the lowest sinewave has the same energy as the highest frequency in the message and the highest sinewave has the same energy as the lowest frequency in the sinewave. This is *message inversion* (or *frequency inversion*).

Message inversion is a popular method of message "scrambling" that is used to protect radio and telephone communications from being understood in the event that they are accidentally received by a casual listener. The process is identical to that described above except that the message is used to modulate a low frequency carrier to keep the inverted message in the baseband.

This is illustrated in Figures 3a and 3b. They show the spectral composition of DSBSC and SSBSC modulating a 3.3kHz carrier with the message in Figure 1. In both cases, there is a signal occupying the same portion as the original message but with the inverted energy distribution pattern.

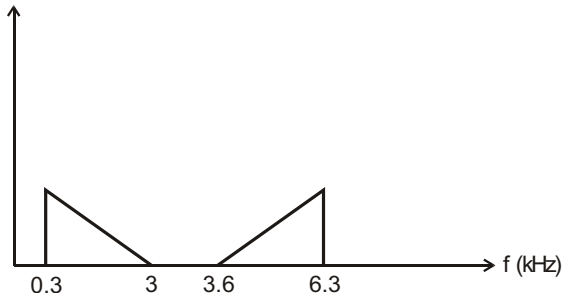

Figure 3a - DSBSC

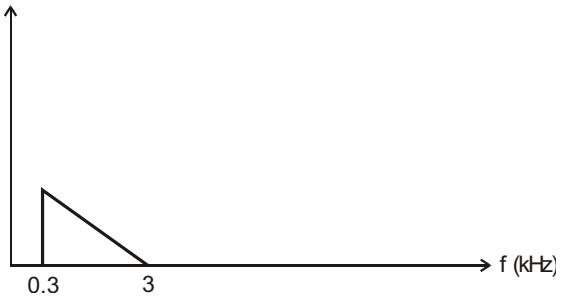

Figure 3b – SSBSC (LSB)

Once the message is inverted, it is filtered to remove the upper sideband (if the signal is generated using DSBSC) and, although audible, is unintelligible. The signal is then used to modulate the transmission carrier using any of the modulation schemes.

 © 2008 Emona Instruments

Importantly, if a casual listener tunes into the transmission, their receiver only recovers the unintelligible inverted message protecting it from being overheard. Receivers designed to unscramble the message must frequency invert it after demodulation to make it meaningful.

This is a fairly basic form of scrambling and so it cannot provide much protection against a determined attempt to eavesdrop. However, security can be improved by randomly changing the scramble carrier's frequency or by causing it to sweep between two frequencies. As long as the receiver's unscrambling carrier is synchronised to the scrambler's carrier the message can be recovered.

The experiment

For this experiment you'll use the Emona DATEx to generate a DSBSC signal using a 1kHz sinewave for the message and a 2kHz sinewave for the carrier. You'll then adjust a low-pass filter to remove the DSBSC signal's upper sideband leaving only the inverted message. Finally, you'll listen to the output and note the effect of scrambling on a single sinewave message and a speech message.

It should take you about 30 minutes to complete the experiment.

Pre-requisites:

Experiments 1, 2 & 3 (Vol. 1): Intros to the NI ELVIS II, the Emona DATEx and SFP control
Experiment 6 (Vol. 1): DSBSC modulation
Experiment 7 (Vol. 1): Observations of AM & DSBSC signals in the frequency domain (desirable)

Equipment

- Personal computer with appropriate software installed
- NI ELVIS II plus USB cable and power pack
- Emona DATEx experimental add-in module
- Two BNC to 2mm banana-plug leads
- Assorted 2mm banana-plug patch leads
- One set of headphones (stereo)

Procedure

Part A – Setting up the scrambler

Message inversion for scrambling can be implemented on the Emona DATEx using either DSB or SSB modulation. For simplicity of wiring, we'll use DSB. The first part of this experiment gets you to set-up the scrambler.

1. Ensure that the NI ELVIS II power switch at the back of the unit is off.

2. Carefully plug the Emona DATEx experimental add-in module into the NI ELVIS II.

3. Set the *Control Mode* switch on the DATEx module (top right corner) to *PC Control*.

4. Connect the NI ELVIS II to the PC using the USB cable.

   Note: This may already have been done for you.

5. Turn on the NI ELVIS II power switch at the rear of the unit then turn on its *Prototyping Board Power* switch at the top right corner near the power indicator.

6. Turn on the PC and let it boot-up.

7. Launch the NI ELVISmx software.

8. Launch and run the NI ELVIS II Function Generator VI.

9. Adjust the function generator for an output with the following specifications:

   - Waveshape: Sine
   - Frequency: 1kHz
   - Amplitude: 4Vpp
   - DC Offset: 0V

10. Launch the DATEx soft front-panel (SFP) and check that you have soft control over the DATEx board.

11. Locate the Tuneable Low-pass Filter module on the DATEx SFP and set its soft *Gain* control to about the middle of its travel.

12. Set the Tuneable Low-pass Filter module's soft *Cut-off Frequency Adjust* control to about the middle of its travel.

13. Connect the set-up shown in Figure 4 below.

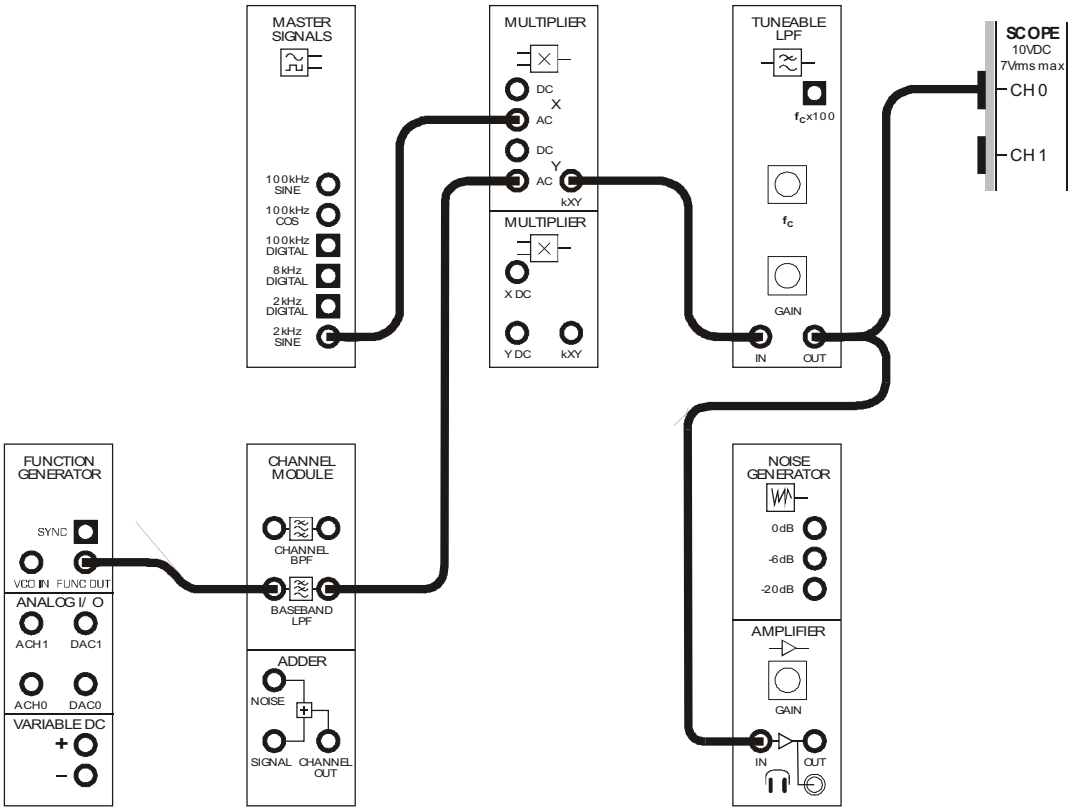

Figure 4

This set-up can be represented by the block diagram in Figure 5 on the next page. The function generator is used to generate a 1kHz test message. The Baseband LPF is not needed for the test message but will be necessary later for band-limiting a speech message to 2kHz. The Multiplier module is used to generate a DSBSC signal and the Tuneable Low-pass Filter module is used to remove the DSBSC signal's upper sideband to leave only the inverted copy of the message. The Amplifier module is not shown in Figure 5 as its function is to drive the low impedance headphones so that you can listen to the inverted message.

© 2008 Emona Instruments

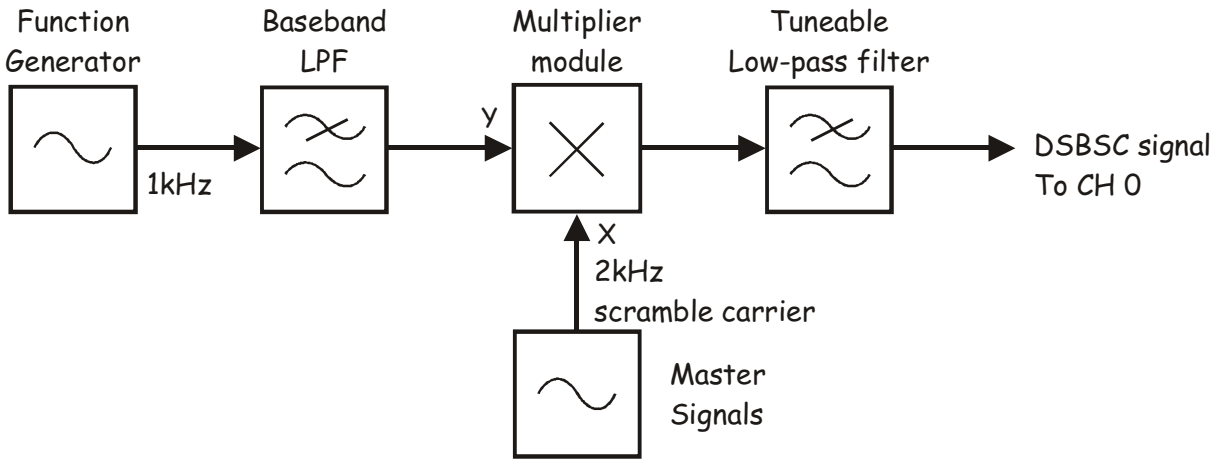

Figure 5

Question 1

What is the frequency of the two sinewaves on the multiplier's output given the set-up multiplies a 1kHz message with a 2kHz carrier? **Tip:** If you're not sure, think of the math involved in multiplying sinewaves.

Ask the instructor to check your work before continuing.

 © 2008 Emona Instruments

Part B – Adjusting the scrambler

The next part of the experiment gets you to confirm your answer to Question 1 and make the necessary adjustments to remove the DSB modulator's upper sideband. Once done, the scrambler is fully implemented.

14. Launch and run the NI ELVIS II Dynamic Signal Analyzer VI.

15. Adjust the signal analyzer's controls as follows:

Input Settings

- *Source Channel* to *SCOPE CH 0*
- Voltage Range to ±10V

FFT Settings

- *Frequency Span* to *8,000*
- *Resolution* to *400*
- *Window* to *7 Term B-Harris*

Averaging

- *Mode* to *RMS*
- *Weighting* to *Exponential*
- *# of Averages* to *3*

Trigger Settings

- *Type* to *Edge*

Frequency Display

- *Units* to *Linear*
- *Mode* to *RMS*
- *Scale* to *Auto*
- *Cursors On* box unchecked (for now)

16. Once done, several significant sinewaves should be displayed.

Note: It's important at this point to double-check that the signal analyzer's Frequency Display *Units* option is set to *Linear*.

17. Activate the signal analyzer's cursors by checking the *Cursors On* box.

18. Use the scope's *C1* cursor to locate the DSBSC signal's lower and upper sidebands (the LSB and USB) and verify your answer to Question 1.



Ask the instructor to check your work before continuing.

19. Examine the DSBSC signal's spectrum carefully. You should notice that there is a very small signal at 2kHz.

Question 2
What is this 2kHz sinewave?

Question 3
Why is this sinewave present?



Ask the instructor to check your work before continuing.

20. Make a note of the magnitude of the DSB signal's lower sideband.

Note: You can do this by projecting the lower sideband's tip across to the left of the display and reading the number off the Y-axis.

21. Slowly reduce the Tuneable Low-pass Filter module's cut-off frequency a little while watching the analyzer's display.

Note: As you do, you'll notice that the higher frequency components in the DSBSC signal are attenuated one-by-one.

22. Continue to reduce the Tuneable Low-pass Filter module's cut-off frequency just until the suppressed carrier disappears.

Note 1: You have gone too far if the LSB's magnitude is not the same value that you noted for Step 20.

Note 2: Once done, the only signal now should be the inverted message.

 © 2008 Emona Instruments



Ask the instructor to check your work before continuing.

Part C – Listening to the effects of scrambling

The final part of this experiment gets you to listen to the scrambler's output – first for a simple sinewave message then for speech.

23. Locate the Amplifier module on the DATEx SFP and turn its soft *Gain* control fully anti-clockwise.

24. Without wearing the headphones, plug them into the Amplifier module's headphone socket.

25. Put the headphones on.

26. Increase the Amplifier module's gain until you can comfortably hear the inverted message.

27. Commit the message's sound to memory.

28. Disconnect the Amplifier module's lead where it plugs to the Tuneable Low-pass Filter module's output and connect it to the function generator's output.

29. Compare the sound of the two signals, they should be similar.

Question 4

Why isn't the sound of the 1kHz sinewave "scrambled"?



Ask the instructor to check your work before continuing.

30. Modify the set-up as shown in Figure 6 below.

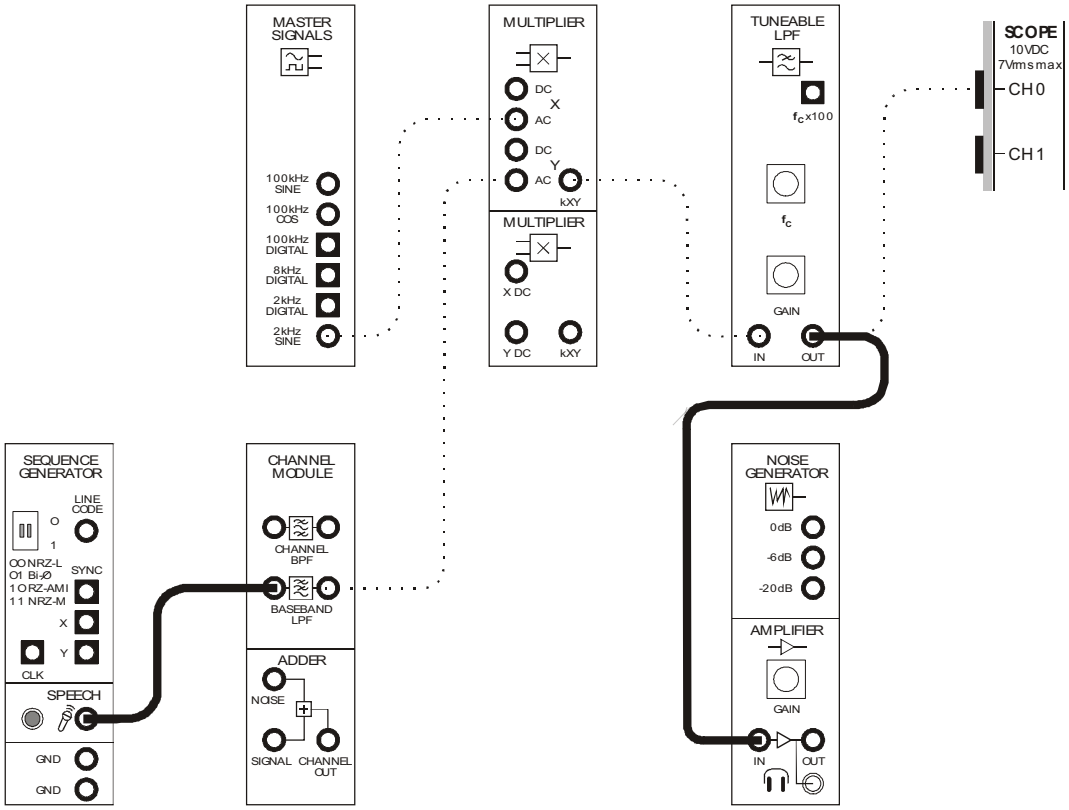

Figure 6

This modification substitutes the Speech module's output for the 1kHz test signal from the function generator. It also returns the Amplifier module's input to the Tuneable Low-pass Filter module's output so you can hear the scrambled message again.

31. Have the person wearing the headphones stand as far away from the set-up as its lead allows.

    Note: If you have a set of stereo earbuds (from an mp3 player for example), they may be better to use for this part of the experiment as they are more likely to remove extraneous room sounds.

32. Have a person not wearing the headphones talk quietly into the microphone.

33. Swap places so the other person can listen to the scramble message.

 © 2008 Emona Instruments

Question 5

What two methods can be used to improve this type of message scrambling?



Ask the instructor to check your work before finishing.

© 2008 Emona Instruments

Name: _____

Class: _____

8 - Carrier acquisition using the phase-locked loop

Experiment 8 – Carrier acquisition using the phase-locked loop

Preliminary discussion

Product detection is a long-standing commercial method used for demodulating SSB signals that can also be used to demodulate DSB and AM signals. Recall though that, crucial to the correct operation of the product detector is the synchronisation of the modulator's carrier signal and the product detector's local carrier. A small frequency error between the carriers causes the message signal's amplitude to vary continuously (at the rate of the error). Larger frequency errors can render the recovered message completely unintelligible. Phase errors between the two signals result in a reduced output from the receiver and possibly even no output at all (for a phase error of 90°).

When implementing product detection of SSB, DSB and AM signals for other Emona DATEx experiments, these synchronisation errors are avoided by simply "stealing" the modulator's carrier (with a patch lead) for use as the product detector's local carrier. This is obviously not possible in practice for wireless communications! As such, a method of remotely synchronising the two signals is necessary.

Until relatively recently, the most common method of achieving carrier synchronisation for SSB receivers involved inserting the transmitter's original carrier into the SSB signal after it has been generated. This signal is called a *pilot carrier* and is at a much lower level than the sidebands (typically -20dB). The low level carrier can then be acquired by the receiver and used for the product detector's local carrier.

An obvious method of acquiring the pilot is to use a band-pass filter. However, this is impractical due to the complexity of balancing the contradictory needs of filtering out the nearby sideband (or sidebands if the signal is DSB or AM) while maintaining a wide enough pass-band to cater for any carrier instability (that is, drifts in the transmitter's carrier frequency).

A better solution involves using the phase-locked loop (PLL). The PLL effectively acquires the pilot carrier by generating its own carrier signal that is synchronised to the pilot. The block diagram of a PLL is shown in Figure 1 below - the VCO is the demodulator's local oscillator.

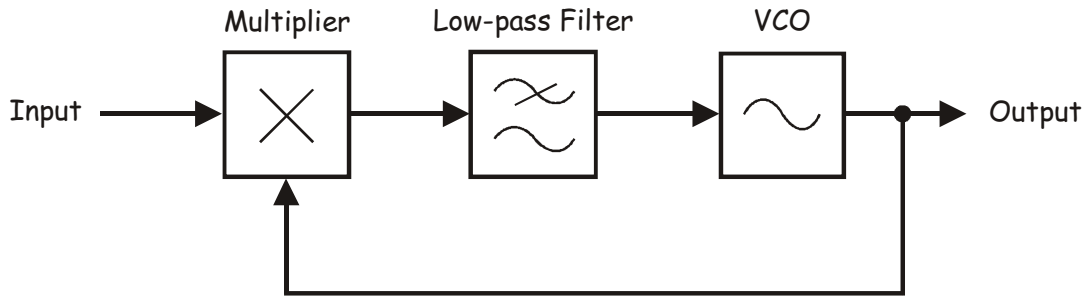

Figure 1

A mathematical analysis of PLL operation is complicated. For our purposes here, it's better to think of its operation this way. Imagine the connection between the low-pass filter and the VCO is broken. If this is the case, the arrangement is basically the product detector shown in Figure 2 below.

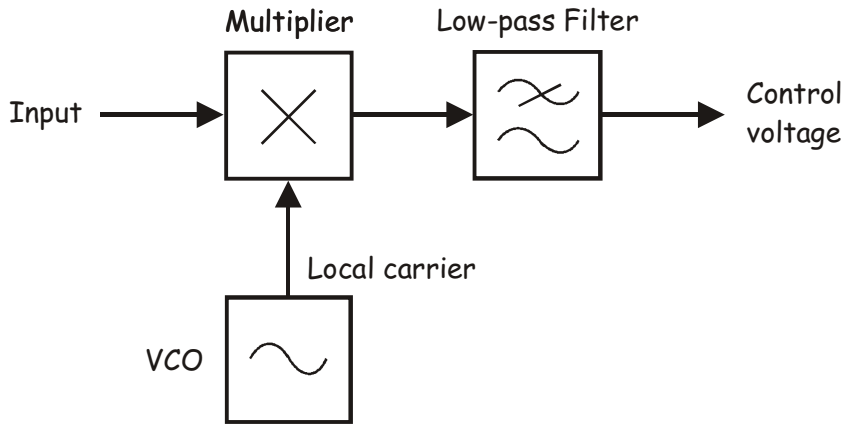

Figure 2

Suppose the PLL's input is an unmodulated carrier and the VCO's output is a sinewave with an identical frequency. The math predicts that the multiplier's output is a DC component and a sinewave equal to the sum of the inputs' frequencies. Importantly, the magnitude of the DC component is a function of the phase difference between the two carriers. A phase difference of 0° produces the maximum DC output voltage and a phase difference of ±90° produces 0V DC. Put another way, any phase difference between the multiplier's inputs either side of 90° produces a DC voltage.

Now, suppose that the VCO's output changes to a slightly different frequency. This has two effects on the multiplier's output. First, the frequency of the sinewave on its output changes. Second and more importantly, the resulting continuous change in phase difference between the carriers causes the magnitude of the DC component to change continuously in sympathy (so it's not really DC any more).

The low-pass filter is used to remove the multiplier's sinewave but let the "changing DC" pass. So, when its output is connected to the VCO's input, this changing DC component causes the VCO's output frequency to change as well. Inevitably, at some point the two signals will have the same frequency and have 90° of phase shift. When this happens the multiplier's DC component is 0V and the PLL achieves "lock". Once lock is achieved, changes in the VCO's output frequency automatically produce a DC voltage that corrects it and forces it to return to the frequency of the carrier.

In terms of carrier acquisition, the VCO's output is now a sinewave with an identical frequency to the carrier with a fixed 90° phase shift. Of course, for the VCO's output to be useful as a local carrier, the 90° phase shift between the modulated carrier and the local carrier must be corrected.

 © 2008 Emona Instruments

The experiment
For this experiment you'll use the Emona DATEx to generate an AM signal. You'll then implement a phase-locked loop (PLL) to generate a local carrier that is synchronised to the AM signal's carrier.

It should take you about 30 minutes to complete this experiment.

Pre-requisites:
Experiments 1, 2 & 3 (Vol. 1): Intros to the NI ELVIS II, the Emona DATEx and SFP control
Experiment 6 (Vol. 1): DSBSC modulation
Experiment 9 (Vol. 1): DSBSC demodulation

Equipment

- Personal computer with appropriate software installed
- NI ELVIS II plus USB cable and power pack
- Emona DATEx experimental add-in module
- Two BNC to 2mm banana-plug leads
- Assorted 2mm banana-plug patch leads

Procedure

Part A - Generating a 100% modulated signal

To experiment with carrier acquisition, you'll need a modulated carrier signal and either an AM, DSB or SSB signal can be used for this purpose. We'll use an AM signal because it avoids having to re-insert a pilot carrier (which we would have to do for a DSB or SSB signal) and so keeps the wiring relatively simple. The first part of this experiment gets you to set up a 100% modulated AM signal using an 8.33kHz message.

1. Ensure that the NI ELVIS II power switch at the back of the unit is off.

2. Carefully plug the Emona DATEx experimental add-in module into the NI ELVIS II.

3. Set the *Control Mode* switch on the DATEx module (top right corner) to *PC Control*.

4. Connect the NI ELVIS II to the PC using the USB cable.

   Note: This may already have been done for you.

5. Turn on the NI ELVIS II power switch at the rear of the unit then turn on its *Prototyping Board Power* switch at the top right corner near the power indicator.

6. Turn on the PC and let it boot-up.

7. Launch the NI ELVISmx software.

8. Launch and run the NI ELVIS II Oscilloscope.

9. Launch the DATEx soft front-panel (SFP) and check that you have soft control over the DATEx board.

10. Locate the Tuneable Low-pass Filter module on the DATEx SFP and set its soft *Gain* control to about the middle of its travel.

11. Turn the Tuneable Low-pass Filter module's soft *Cut-off Frequency Adjust* control fully clockwise.

12. Connect the set-up shown in Figure 3 below.

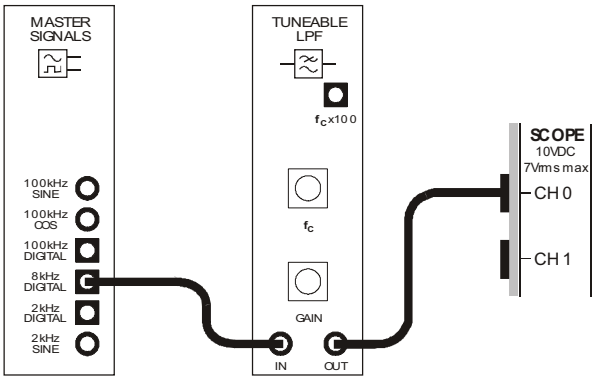

Figure 3

This set-up can be represented by the block diagram in Figure 4 below. It uses the Tuneable Low-pass Filter module to filter the 8.33kHz fundamental from an 8.33kHz digital signal.

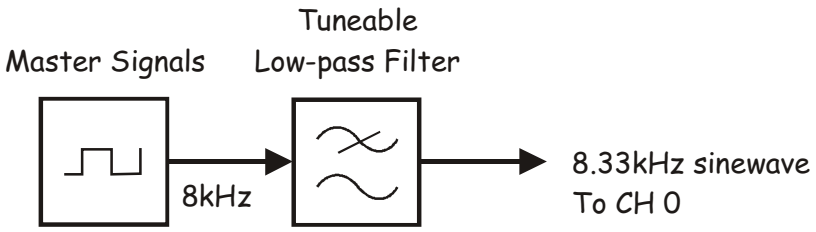

Figure 4

13. Adjust the scope to view two or so cycles of the Tuneable Low-pass Filter module's output. Essential scope settings include:

    - *Coupling* for both channels to *AC*
    - *Trigger Type* to *Edge*
    - *Trigger Source* to *CH 0*
    - *Trigger Level* to *2V*

14. Verify that the Tuneable Low-pass Filter module's output is an 8.33kHz sinewave.

15. Adjust the Tuneable Low-pass Filter module's soft *Gain* control so that the Tuneable Low-pass Filter module's 8.33kHz sinewave is 4Vp-p.

16. Modify the set-up as shown in Figure 5 below.

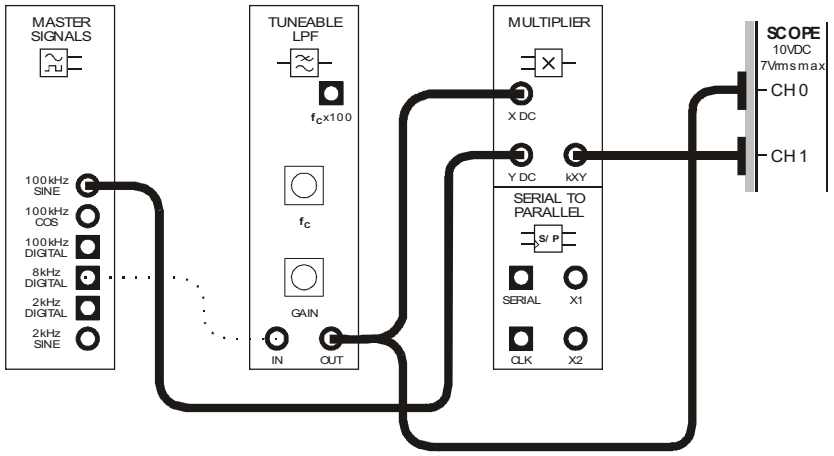

Figure 5

This set-up can be represented by the block diagram in Figure 6 below. It uses the 4Vp-p 8.33kHz sinewave as the message to amplitude modulate a 100kHz carrier. Note, as the 8.33kHz sinewave also consists of a 2V DC offset, the modulation level is 100%.

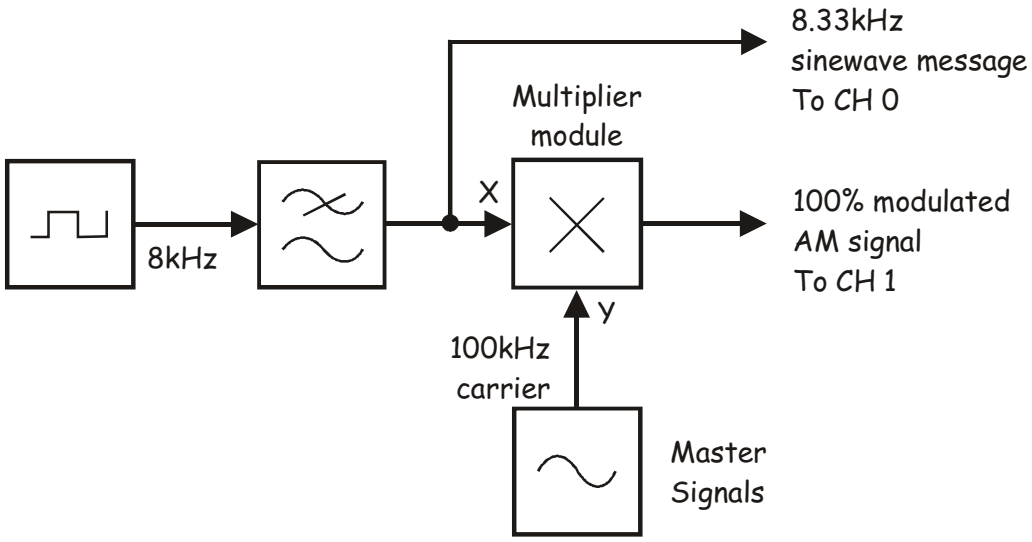

Figure 6

 © 2008 Emona Instruments

17. Adjust the scope to view the Multiplier module's output as well as the message signal.

18. Verify that the Multiplier module's output is an AM signal by checking that its envelopes are a copy of the message.

    Note: The modulation index of the AM signal is not crucial to this experiment. A 100% modulated AM signal is used purely for simplicity of wiring.



Ask the instructor to check your work before continuing.

Part B – Acquiring the carrier using the phase-locked loop

The next part of the experiment uses a phased-lock loop (PLL) to generate a local carrier signal that is synchronised to the AM signal's carrier. This signal can be used by a product detector to demodulate the AM signal (though that's not possible to do for this experiment because the Tuneable Low-pass Filter module is necessary and it is used to create the 8.33kHz message).

19. Launch and run the NI ELVIS II Function Generator VI.

20. Adjust the function generator for an output with the following specifications:

    - Waveshape: Sine
    - Frequency: 100kHz
    - Amplitude: 4Vpp
    - DC Offset: 0V
    - Modulation Type: FM

21. Locate the Adder module on the DATEx SFP and set its soft *g* control to about the middle of its travel.

22. Set the scope's *Trigger Level* control to *0V*.

23. Modify the set-up as shown in Figure 7 below.

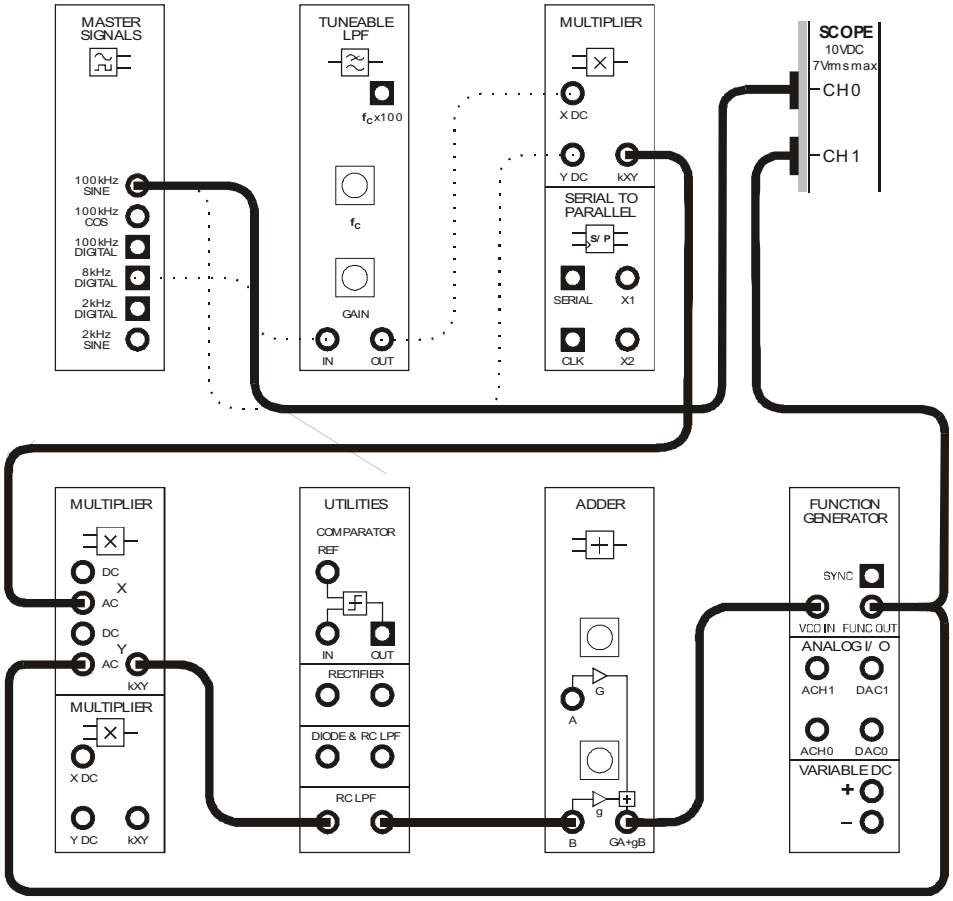

Figure 7

The additions to this set-up can be represented by the block diagram in Figure 8 on the next page. The arrangement implements a PLL that generates a local carrier synchronised to the AM signal's carrier.

Importantly, the Adder module is used as an attenuator to reduce the size of the feedback signal. This effectively reduces the VCO's sensitivity. If this is not done, even small variations on the RC LPF's output will cause the VCO's output frequency to change too much in response and making lock impossible to achieve.

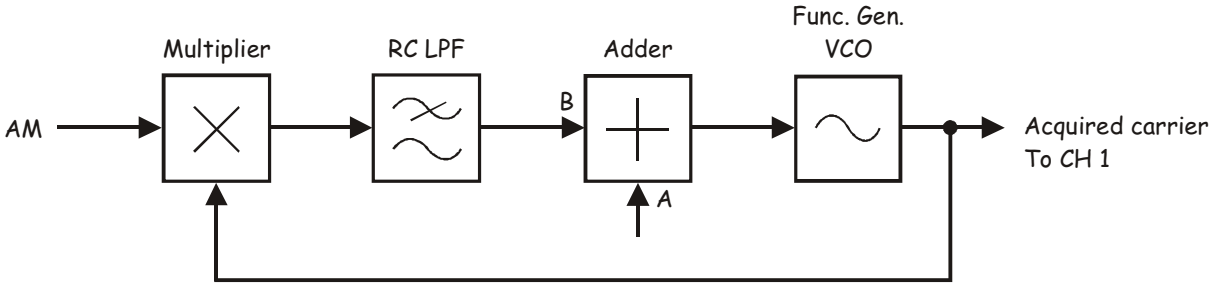

Figure 8

The entire set-up can be represented by the block diagram in Figure 9 below.

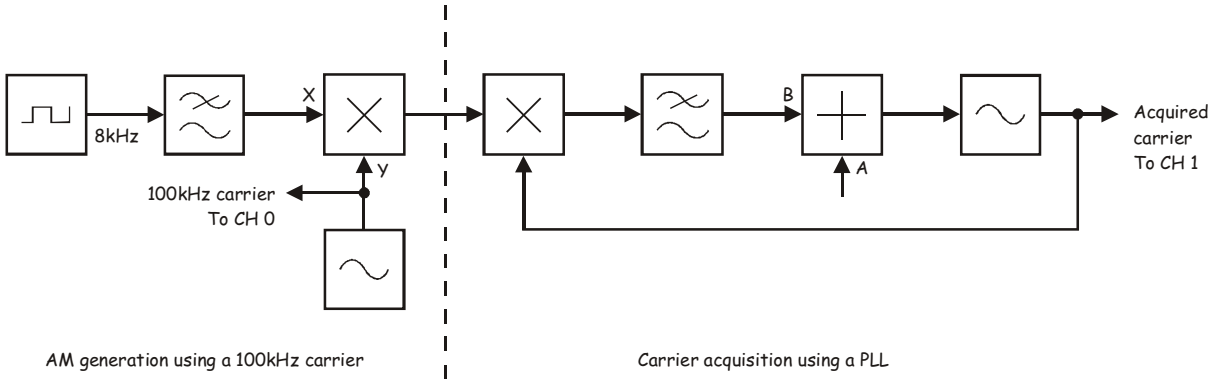

Figure 9

24. Adjust the scope's *Timebase* control to view two or so cycles of the two carriers.

25. Compare the signals.

    Note: You'll notice that the VCO's output is a signal that varies wildly about 100kHz. This tells you that the phase-locked loop isn't locked.

26. Gradually reduce the Adder module *B* input's gain by turning its soft *g* control anti-clockwise.

    Note: This ultimately attenuates the feedback signal.

27. Stop reducing the Adder module *B* input's gain the moment the VCO's output locks.

    Note: You'll recognise lock when you see it.

28. To prove that your PLL has lock, change the function generator's output frequency from 100kHz to 99kHz using its VI and use the scope to see what happens to the VCO's output.

Note: You shouldn't see a change in the VCO's output frequency.

Question 1
Once lock is achieved, what's the phase relationship between the AM signal's carrier and the PLL's output?

Question 2
What problem would this particular amount of phase shift cause if the signal is used for product demodulation of AM and DSBSC?

Question 3
How can this problem be resolved?



Ask the instructor to check your work before continuing.

© 2008 Emona Instruments

29. Experiment with other the function generator frequencies near 100kHz and observe the effect on the VCO's output.

Question 4
Is it possible for the PLL's output to achieve lock for any frequency difference between the carriers?

---

30. Find the lowest frequency for the VCO's output that you can have and still obtain lock. Record this in Table 1 below.

31. Find and record the highest frequency for the VCO's output that you can have and still obtain lock.

Table 1

Lowest lock frequency	Highest lock frequency



Ask the instructor to check your work before finishing.

Name: _____

Class: _____

9 - Signal-to-noise ratio and eye diagrams

Experiment 9 – Signal-to-noise ratio and eye diagrams

Preliminary discussion

Your studies of communications and telecommunications so far will have inevitably included the issue of noise. Noise is important because it interferes with the reproduction of the message at the receiver. For analag messages such as speech and music, noise can be heard as hiss, crackle and pops that are superimposed on the recovered message. For digital messages such as data, noise results in corrupted bits: that is, bits read incorrectly. In both cases, information is lost.

It's not a surprise then that the noise performance of modulation schemes and systems is quantified, especially when we want to compare between them. A widely used method for doing so is *signal-to-noise ratio* (SNR). As its name implies, SNR is simply the ratio of signal voltage (or power) to noise voltage (or power). The equation for calculating SNR is:

$$SNR = \frac{S}{N}$$

Where: S = signal voltage or power; and
N = noise voltage or power

The greater the signal relative to the noise (which is desirable), the greater the SNR. That said, simple ratios can be misleading when dealing with signals and so decibels are often preferred. The equation for calculating SNR as a decibel is either:

$$SNR_{(dB)} = 20Log\frac{V_S}{V_N} \quad \text{or} \quad SNR_{(dB)} = 10Log\frac{P_S}{P_N}$$

To perform these calculations, a measurement of the signal's voltage (or power) and the noise's voltage (or power) must be made. In most laboratory environments, the noise is controlled and can be removed from the signal. This makes separate measurements of signal and noise a relatively simple matter. However, in the field, the signal may not be available alone and so an alternative calculation must be used:

$$SNR = \frac{S+N}{N}$$

Obviously, the two SNR ratio equations produce different numbers. However, the greater the SNR of the system the smaller the difference between the values.

Importantly, the spectral composition of noise usually results in peak and peak-to-peak voltages that vary randomly and so it's difficult to obtain a precise measurement of these. And, unless a test signal such as a sinewave is used, the peak and peak-to-peak voltage of message signals can vary also. That being the case, it's better to measure the RMS value of signal and noise voltages for SNR calculations.

The experiment
For this experiment you'll use the Emona DATEx to add noise to a message (a digital data signal). This signal will then be band-limited to model the type of noise-affected signal that is possible at the output of a receiver. You'll then use this signal for determining signal-to-noise ratio figures for a variety of noise levels. Finally, you observe the effects of noise and band-limiting on digital data signals using Eye Diagrams.

It should take you about 45 minutes to complete this experiment.

Pre-requisites:
Experiments 1, 2 & 3 (Vol. 1): Intros to the NI ELVIS II, the Emona DATEx and SFP control
Experiment 14 (Vol. 2): PN sequence spectra and noise generation (desirable)

Equipment

- Personal computer with appropriate software installed
- NI ELVIS II plus USB cable and power pack
- Emona DATEx experimental add-in module
- Three BNC to 2mm banana-plug leads
- Assorted 2mm banana-plug patch leads

Procedure

Part A – Adding noise to a signal
To determine signal-to-noise ratio, you need a model message signal with noise added to it. The first part of the experiment gets you to set one up. For this purpose, any signal can be used to model a message including a sinewave, speech or a digital data signal. We've decided to use a digital data signal as most new communications systems these days are digital and you'll be able to use the signal when you investigate Eye Diagrams later in the experiment.

1. Ensure that the NI ELVIS II power switch at the back of the unit is off.

2. Carefully plug the Emona DATEx experimental add-in module into the NI ELVIS II.

3. Set the *Control Mode* switch on the DATEx module (top right corner) to *PC Control*.

4. Connect the NI ELVIS II to the PC using the USB cable.

   Note: This may already have been done for you.

 © 2008 Emona Instruments

5. Turn on the NI ELVIS II power switch at the rear of the unit then turn on its *Prototyping Board Power* switch at the top right corner near the power indicator.

6. Turn on the PC and let it boot-up.

7. Launch the NI ELVISmx software.

8. Launch the DATEx soft front-panel (SFP) and check that you have soft control over the DATEx board.

9. Locate the Sequence Generator module on the DATEx SFP and set its soft DIP-switches to 00.

10. Connect the set-up shown in Figure 1 below.

    Note: Insert the black plugs of the oscilloscope leads into a ground (*GND*) socket.

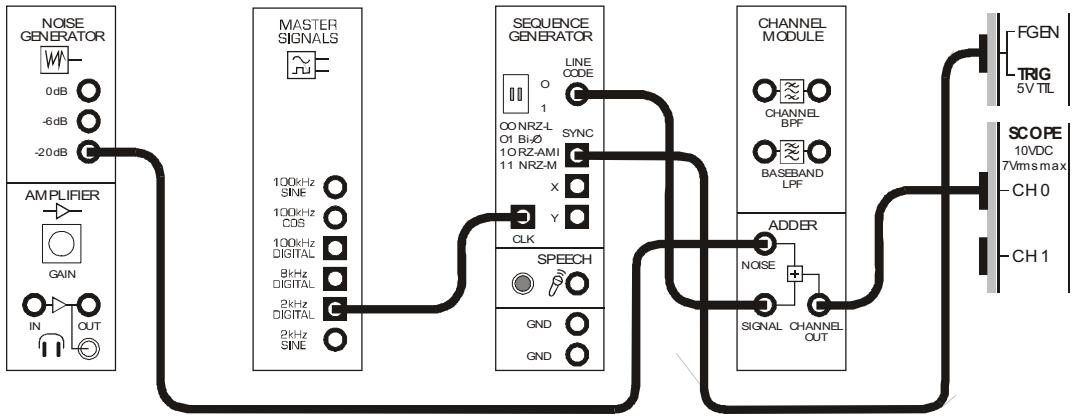

Figure 1

This set-up can be represented by the block diagram in Figure 2 on the next page. The Sequence Generator module is used to model a digital data signal for a message and the Adder module is used to add noise from the Noise Generator module's output to it.

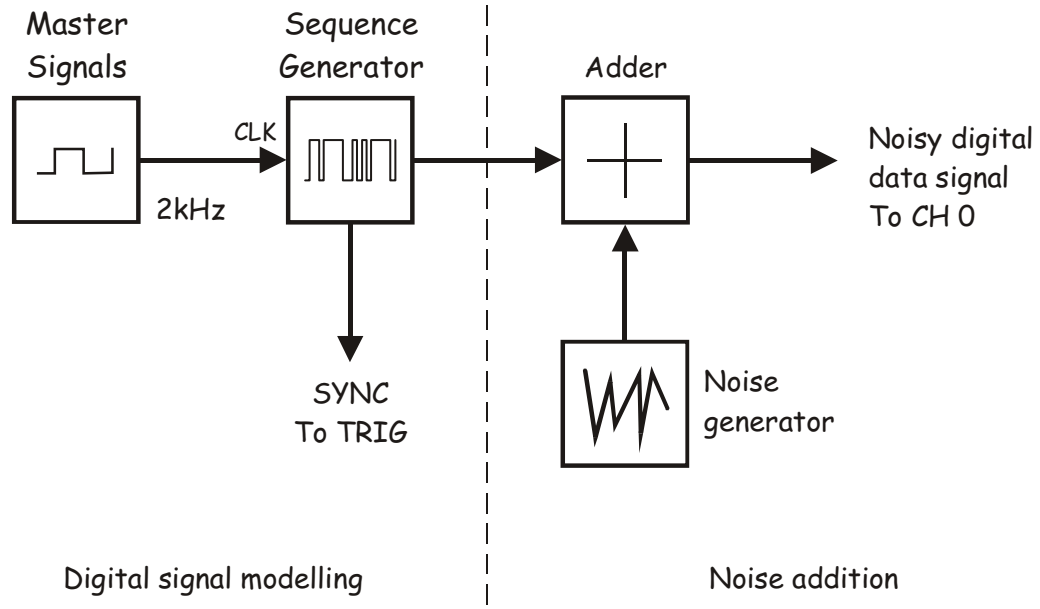

Figure 2

11. Launch and run the NI ELVIS II Oscilloscope VI.

12. Adjust the scope to view the Adder module's output as a stable display. Essential scope settings include:

    - *Timebase* to *1ms/div*
    - *Trigger Type* to *Digital*

13. Observe the Adder module's output signal.

    Note: You should see the model of a digital data signal with wideband electrical noise superimposed on it.

14. Disconnect the patch lead to the Noise Generator module's *-20dB* output and connect it to its *-6dB* output.

15. Observe the Adder module's output signal.

    Note 1: You should observe a significant increase in noise level on the digital data signal.

    Note 2: You may need to adjust the scope's Channel 1 *Scale* control to see the tops and bottoms of the signal.

 © 2008 Emona Instruments

16. Disconnect the patch lead to the Noise Generator module's *-6dB* output and connect it to its *0dB* output.

17. Observe the Adder module's output signal.

Note: You should observe another significant increase in noise level on the digital data signal. In fact, it's probably very difficult to see the data at all.

Question 1
Based on its appearance, what type of noise is the Noise Generator module modelling?
Tip: This is not discussed in the preliminary discussion but you have probably been taught this.

Question 2
Which of the Noise Generator's outputs provides the most amount of noise?



Ask the instructor to check your work before continuing.

Part B – Band-limiting the noisy signal
SNR measurements of communication systems are typically made at the output of the receiver and this has an important implication for us here. To explain, noise can enter a communications system at any stage in the communications model. However, the channel is usually the most likely point of entry because of its susceptibility (and our limited ability to control it). This means that the noise that enters the system is always band-limited by the channel's response in the same way that the signal itself is. That being the case, for the SNR measurements that you'll make here to accurately model real SNR measurements, you must band-limit both the signal and the noise. The next part of the experiment gets you to do this.

18. Return the scope's Channel 1 *Scale* control to the *1V/div* position.

19. Modify the set-up as shown in Figure 3 below.

    Note: Remember that the dotted lines show leads already in place.

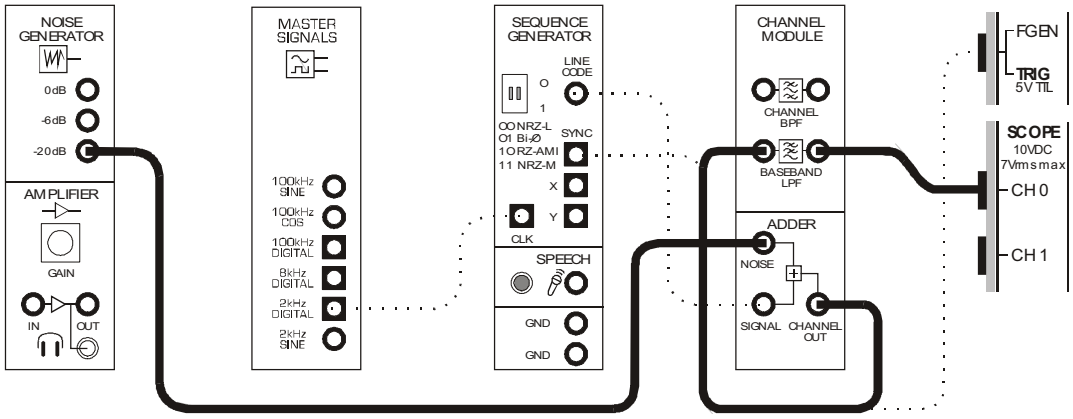

Figure 3

This set-up can be represented by the block diagram in Figure 4 below. The Baseband LPF on the Channel Module is being used to model a channel with a low-pass frequency response.

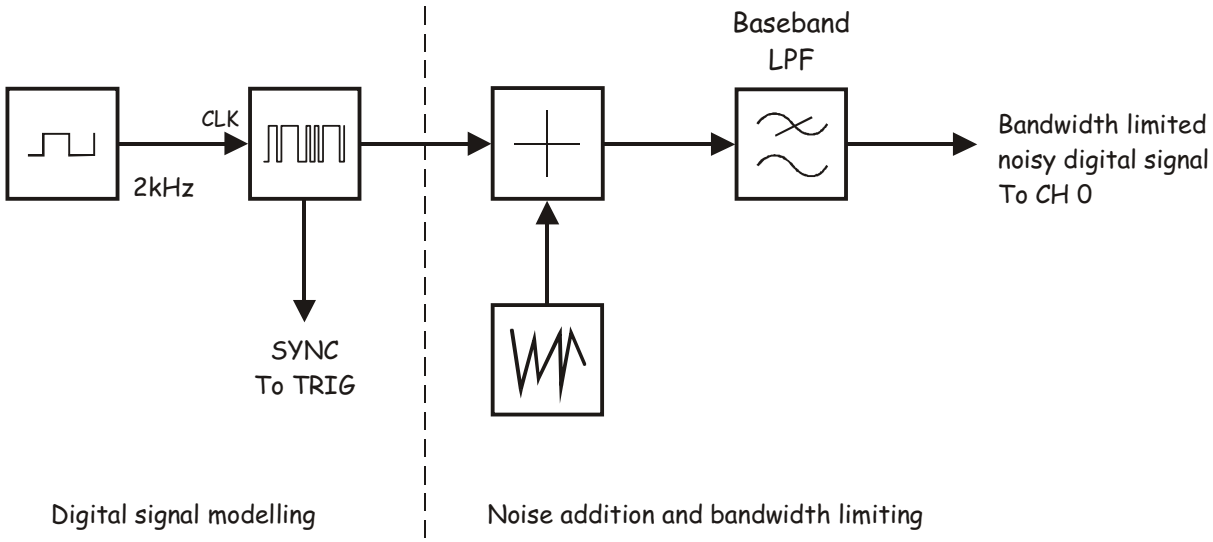

Figure 4

 © 2008 Emona Instruments

20. Observe the Baseband LPF's output signal.

    Note 1: You should see a band-limited digital data signal that is affected by band-limited noise. Notice that it's quite different to the digital signal you had before. Importantly, this a better model of a noisy digital data signal.

    Note 2: As you look at the signal, pay close attention to the amplitude variations during the time that it's a logic-0 and logic-1.

21. Disconnect the patch lead to the Noise Generator module's *-20dB* output and connect it to its *-6dB* output.

22. Observe the Adder module's output signal.

23. Disconnect the patch lead to the Noise Generator module's *-6dB* output and connect it to its *0dB* output.

24. Observe the Adder module's output signal.

    Note: Notice that the digital data signal becomes increasingly distorted as the noise increases.

Question 3
Why doesn't the digital data signal look as "noisy" now as it did before?



Ask the instructor to check your work before continuing.

Part C – Determining signal-to-noise ratio (SNR)

Recall that signal-to-noise ratio (SNR) can be calculated in one of two ways, both of which can be expressed in decibels. The next part of the experiment gets you to do this.

25. Disconnect the patch lead to the Noise Generator module's *0dB* output and leave it disconnected for the moment.

    Note: The Adder module's output now consists of only the signal.

26. Determine the digital data signal's RMS voltage and record this value in Table 1 on the next page.

    Note: The scope is already measuring the RMS voltage for you and is showing it at the bottom of its display.

27. Reconnect the patch lead from the Adder module's *NOISE* input to the Noise Generator module's *-20dB* output.

28. Disconnect the patch lead between the Sequence Generator module's *LINE CODE* output and the Adder module's *SIGNAL* input.

    Note: The Adder module's output now consists of only the noise.

29. Record the noise's RMS voltage in Table 1 also.

30. Use the signal and noise voltages to calculate the signal-to-noise ratio of the signal on the Adder module's output. Record your calculation in Table 1.

    Tip: The equation for this is in the preliminary discussion.

31. Convert your SNR to decibels and record this too.

32. Reconnect the patch lead between the Sequence Generator module's *LINE CODE* output and the Adder module's *SIGNAL* input.

33. Record the "signal plus noise" RMS voltage.

34. Use the "signal plus noise" and noise voltages to calculate and record the alternate signal-to-noise ratio of the signal on the Adder module's output.

35. Convert your alternate SNR to decibels.

 © 2008 Emona Instruments

Table 1

Signal voltage	
Noise voltage	
Signal-to-noise ratio (SNR)	
SNR (in decibels)	
Signal plus noise voltage	
Alternate SNR	
Alternate SNR (in decibels)	

Important note:
You'll notice that neither of the SNRs that you calculated in decibels is -20dB. Yet, the Noise Generator module's outputs that you've been asked to use for this part of the experiment is denoted "-20dB". Is there something wrong?

No. The decibel figure quoted for the Noise Generator module's three outputs are relative to each other. So, the 0dB output is a particular level of noise. The -6dB output is half that level and the -20dB output is one tenth of that.



Ask the instructor to check your work before continuing.

© 2008 Emona Instruments

Question 4
What is the signal-to-noise ratio (the ratio not the decibel) actually telling you?

Question 5
Why are the two signal-to-noise ratios almost identical even though they've been calculated in a different way?

Question 6
What would you expect to happen to the signal-to-noise ratio figures if the Noise Generator module's -6dB or 0dB outputs are used?

Question 7
What other change to the signal-to-noise figures would you expect to see if you used the Noise Generator module's other outputs?

Verify your answer to Questions 6 and 7 by following the next few steps.

36. Disconnect the patch lead between the Sequence Generator module's *LINE CODE* output and the Adder module's *SIGNAL* input.

37. Disconnect the patch lead to the Noise Generator module's *-20dB* output and connect it to its *-0dB* output.

38. Record the noise's RMS voltage in Table 2 on the next page.

39. Use the signal and noise voltages to calculate and record the signal-to-noise ratio of the signal on the Adder module's output.

 © 2008 Emona Instruments

40. Convert your SNR to decibels and record this too.

41. Reconnect the patch lead between the Sequence Generator module's *LINE CODE* output and the Adder module's *SIGNAL* input.

42. Record the "signal plus noise" RMS voltage.

43. Use the "signal plus noise" and noise voltages to calculate and record the alternate signal-to-noise ratio of the signal on the Adder module's output.

44. Convert your alternate SNR to decibels.

45. Compare the SNR figures in Tables 1 and 2 to see if your answers to Questions 6 and 7 are correct.

Table 2

Signal voltage	See Table 1
Noise voltage	
Signal-to-noise ratio (SNR)	
SNR (in decibels)	
Signal plus noise voltage	
Alternate SNR	
Alternate SNR (in decibels)	



Ask the instructor to check your work before continuing.

© 2008 Emona Instruments

Part D – Eye Diagrams

The previous part of the experiment demonstrates that digital signals affected by noise become distorted. Moreover, the experiment has shown that the greater the noise, the greater the distortion and this increases the risk of errors at the receiver. As such, it's important to be able to inspect and test digital data signals to minimise this problem.

Conventional visual inspection of the noisy digital data signal using a scope is not good enough for this purpose because you'll only see the signal's voltages for a relatively small number of bits. Moreover, the random nature of noise can produce spurious logic levels when you're not looking at the scope's display.

A solution to this problem is to use the digital data signal to force the scope to develop an *Eye Diagram*. Eye Diagrams are so-called because of the picture that they produce on the scope's display. An example of one is shown in Figure 5 below.

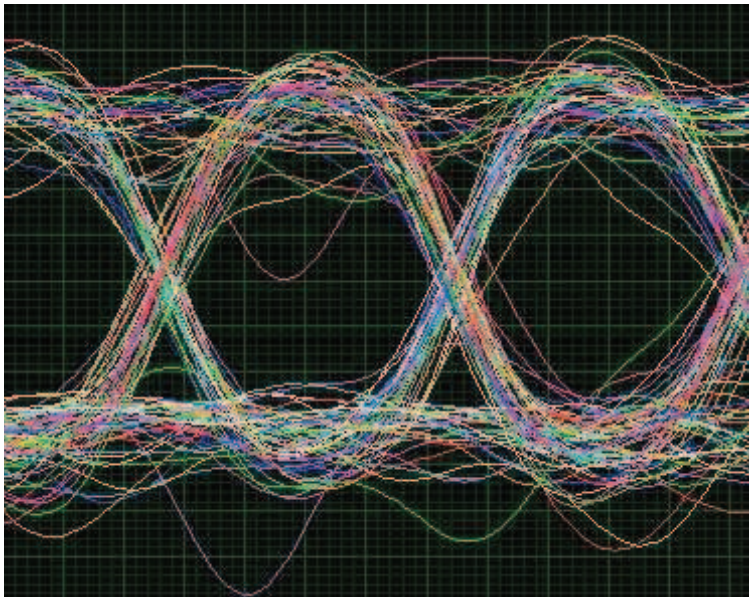

Figure 5

Eye diagrams are achieved by simply looking at the digital data signal using one of the scope's channels but triggering the scope using the digital data signal's bit-clock. This causes the scope's display to become unstable (ie untriggered) - a situation that we'd normally avoid! However, in this case, it causes all waveform combinations that the digital data signal can produce to be written over each other (appearing as though they're all on the screen at the same time but this is only a function of the CRT display's persistence).

In the process, as Figure 5 shows, the spaces between the logic-1s and logic-0s produce "eyes" across the centre of the display. Importantly, the greater the noise, the less ideal the signal's logic levels become and so the eyes begin to "close". The next part of the experiment gets you to observe the effects of noise on digital data signals using an Eye Diagram.

 © 2008 Emona Instruments

46. Modify the set-up as shown in Figure 6 below.

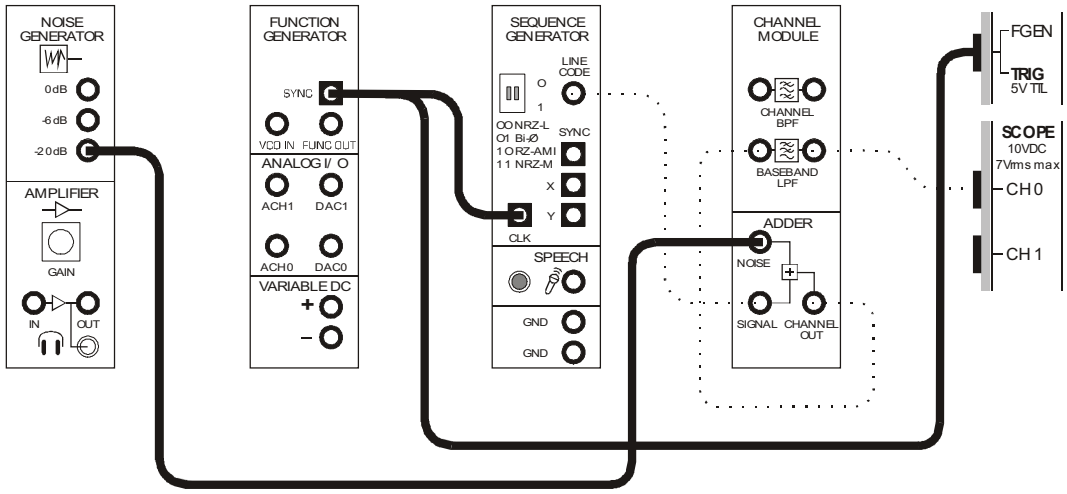

Figure 6

This set-up can be represented by the block diagram in Figure 7 below.

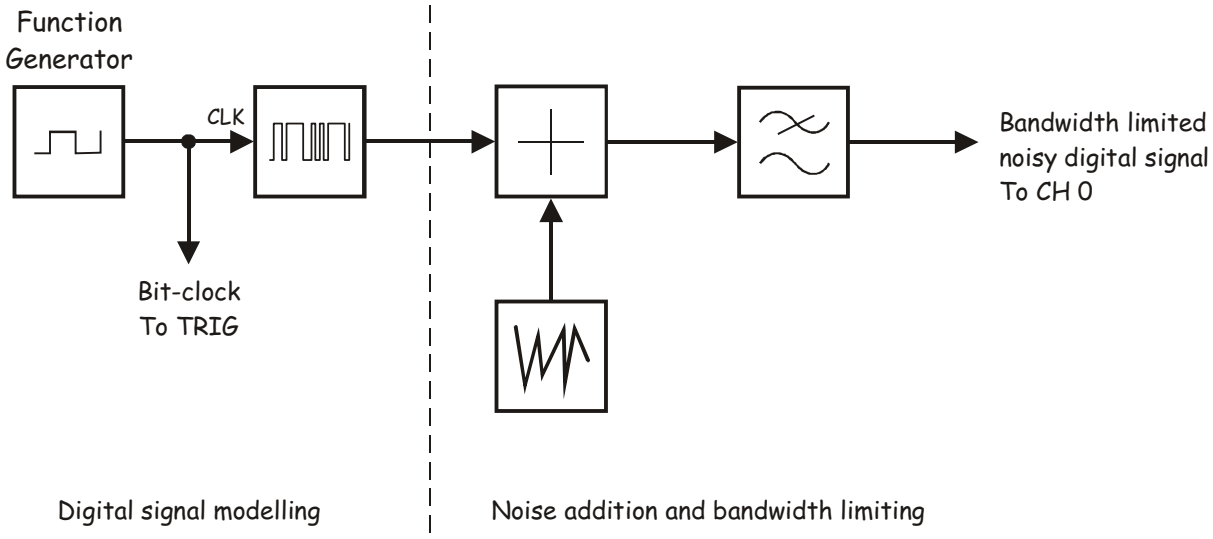

Figure 7

The Sequence Generator module's clock is now provided by the by the function generator so the data rate can be varied (more later). Importantly, the clock is used to trigger the scope to produce the unstable display mentioned on the previous page.

47. Launch and run the NI ELVIS II Function Generator VI.

48. Set the function generator's output frequency to 2kHz using its soft controls.

    Note: It's not necessary to adjust any other controls as the function generator's *SYNC* output will be used and this is a digital signal.

You should now observe on the scope's display a relatively mildly distorted digital data signal. Remember that this distortion is caused by the channel's frequency response (modelled by the Baseband LPF) and the low-level noise that is being added to the signal.

Importantly, as you're triggering the scope from the Sequence Generator module's bit-clock instead of its SYNC signal, the digital data signal is unstable on the screen. For scopes with a CRT display, this arrangement produces an Eye Diagram similar to Figure 5 (when the correct Timebase setting is used). To get a sense of this, set the scope's *Timebase* control to 200µs per division.

You'll notice that the NI ELVIS II Oscilloscope is displaying information that looks a little like an Eye Diagram. But without the persistence of a CRT scope's display, this is as close as it can achieve. So instead, you'll use an Eye Diagram Virtual Instrument. This VI uses the NI ELVIS II scope's hardware to view the digital signal as usual. However, it saves the trace produced by each sweep on the display writing the new traces over the old in different colours. This effectively reproduces in software the persistence of a CRT scope's display.

49. Close the scope's VI.

50. Launch the DATEx Eye Diagram Virtual Instrument per the instructor's directions.

    Note 1: The DATEx Eye Diagram VI will launch running.

    Note 2: Within a couple of seconds of the Eye Diagram VI starting, multiple traces of the scope's sweep for Channel 0 (the noisy band-limited digital data signal) are written on the VI's screen. This will produce an eye diagram similar to the one shown in Figure 5.

    Note 3: If this doesn't happen, you may need to select a different device number to the default. See the instructor for help on this.



Ask the instructor to check your work before continuing.

 © 2008 Emona Instruments

51. Leave the Eye Diagram VI to run for a minute or two to observe the pattern that is formed.

    Note: The low level noise being added to the digital signal is not causing too much distortion so the pattern's eyes should remain wide open.

52. Stop the DATEx Eye Diagram VI by clicking its *STOP* button.

53. Increase digital signal's noise component to -6dB.

54. Run the Eye Diagram VI again.

    Note: The VI's *Run* button is towards the top-left of its window just below the menu bar.

55. Leave the Eye Diagram VI to run for a few minutes and observe the new pattern that is formed.

56. Stop the DATEx Eye Diagram VI.

57. Increase digital signal's noise component to 0dB.

58. Run the Eye Diagram VI again.

59. Leave the Eye Diagram VI to run for a few minutes and observe the new pattern that is formed.

Question 8
What is the relationship between the level of noise that the channel introduces to the digital data signal and the size of the Eye Diagram's eyes?



Ask the instructor to check your work before continuing.

As you have seen throughout this experiment, noise isn't the only factor distorting the digital data signal. The channel's frequency response also plays a part. This is because digital data signals are made up of many sinewaves (the *fundamental* and *harmonics*) and many of them are outside the channel's pass-band and so are attenuated. This inevitably changes the digital signal's shape.

The amount of distortion is a function of the digital data signal's bit-clock and the channel's bandwidth. The greater the frequency of the bit clock or the lower the channel's bandwidth, the greater the distortion. The next part of the experiment lets you see this for yourself.

60. Stop the DATEx Eye Diagram VI.

61. Reduce the digital signal's noise component to -6dB.

62. Run the Eye Diagram VI again and watch it for a couple of minutes.

63. Make a mental note of the size of the Eye Diagram's eyes then stop the DATEx Eye Diagram VI.

64. Increase the digital data signal's bit-clock by increasing the function generator's output frequency to 4kHz.

    Note: By increasing the digital signal's data rate, you'll increase the effect of bandwidth limiting.

65. Run the Eye Diagram VI again and watch it for a couple of minutes.

Question 9
What is the relationship between the digital data signal's bit-clock and the size of the Eye Diagram's eyes?



Ask the instructor to check your work before finishing.

 © 2008 Emona Instruments

Name: _____

Class: _____

10 - Pulse-code modulation and signal-to-noise distortion ratio

Experiment 10 – Pulse code modulation and signal-to-noise distortion ratio (SNDR)

Preliminary discussion

PCM encoding and decoding on the Emona DATEx is like all other digitisation schemes in that it suffers from *quantisation error*. To explain, analog-to-digital conversion involves sampling the input voltage (which will be one of an infinite number of values between the range) and comparing it to a set of quantisation levels. As the number of quantisation levels is finite, the conversion process must allocate the quantisation level that is the closest to the sample and generate the number that represents it. Immediately upon doing so, the actual size of the sample is lost and this is quantisation error. As it's impossible for the PCM decoder to determine the difference between the actual size of the sample and value that the PCM encoder inferred it to be, the PCM decoder reproduces the error on its output.

Importantly, there is a greater chance of a sampled analog voltage being different to one of the quantisation levels than the same. In other words, this error is almost always present and distorts the reproduction of the original signal on the PCM decoder's output. Moreover, the spectral composition of this distortion is similar to the spectral composition of white noise and so quantisation error is said to cause *quantisation noise*. In fact, when audible, quantisation noise can be heard as hiss (provided the quantisation error isn't too large).

Recall that improving a digitisation scheme's resolution involves increasing the number of bits in the binary number. This in turn increases the number of quantisation levels permissible and so the quantisation error involved in every sample must be smaller. Clearly then, quantisation noise is a function of the scheme's resolution. This gives us a potential opportunity to calculate the theoretical size of the quantisation noise and express it as a *signal-to-noise distortion ratio* (SNDR).

However, there are three problems with doing so. First, as the quantisation error is fixed (at $\pm\frac{1}{2}$ bit) any calculated SNDR figure is a function of the size of the analog signal. The bigger the analog signal, the bigger the largest binary number it produces and so the better the SNDR (that is, $\pm\frac{1}{2}$ bit is a much smaller proportion of 11111111 than it is of 00000001). While this isn't problematic in itself, it is when the message is speech which doesn't have fixed amplitude. Second, SNDR is affected by other factors like timing errors between the clocks of the analog-to-digital and digital-to-analog converters. These can be difficult to predict and incorporate into any theoretical calculations of SNDR. Third, PCM systems invariably use a reconstruction filter to remove the aliases (or images) from the decoded PCM data signal. This filtering inevitably removes some of the noise also with the amount of noise rejection being a function of the filter's performance.

These factors combine to make measurement of SNDR an important part of determining the quality of a digitisation scheme for a specific design.

Determining SNDR by measurement is similar to determining conventional signal-to-noise ratio (SNR) by measurement. This typically involves measuring the RMS noise voltage (N) independently of the signal then measuring either the RMS value of the recovered message signal voltage (S) or the RMS value of the recovered message signal plus noise voltage (S+N). RMS values are used so that the SNR figure is an average for the changing size of the message. The SNR is then calculated using either:

$$SNR = \frac{S}{N} \qquad \text{or} \qquad SNR = \frac{S+N}{N}$$

However, there are couple of small catches when doing this for SNDR. First, it's not possible to measure the recovered message signal without quantisation noise because quantisation noise is always present – it's a property of digitisation. This means that the second of the two equations above must be used.

Second, it not possible to measure the quantisation noise independent of the signal in the same way as for conventional SNR. When you think about this, it makes sense. Without an analog input signal there are no quantisation errors to cause the quantisation noise in the first instance. This means that additional processing is needed prior to measurement to isolate the noise from the signal.

A method for doing this involves a technique of nulling signals that was introduced to you in Experiment 4 of Volume 1. Figure 1 below shows the block diagram of how this is implemented.

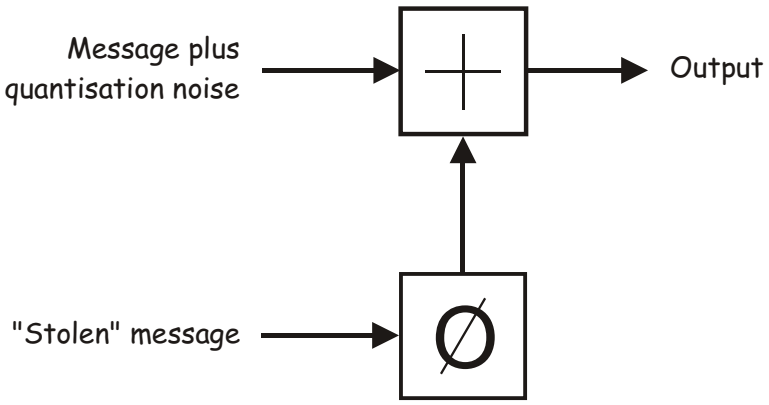

Figure 1

The signal with its quantisation noise is fed to one input of an adder. A copy of the original message (stolen from the source) is connected to the adder's other input via a phase shifter. The phase shifter is then adjusted so that the stolen message is 180° out of phase with the recovered message. Once done, the adding process cancels the two messages completely (ideally) leaving only quantisation noise to be measured.

The experiment

For this experiment you'll use the Emona DATEx to set up a PCM communications system. You'll then use it to determine the SNDR of the signal on the PCM decoder's output (that is, the signal prior to reconstruction filtering). Next, you'll complete the PCM system by adding a reconstruction filter using a simple RC low-pass filter and measure its SNDR. Finally, you'll substitute the RC LPF for a more sophisticated filter and examine the effect this has on SNDR.

It should take you about 50 minutes to complete this experiment.

Pre-requisites:

Experiments 1, 2 & 3 (Vol. 1): Intros to the NI ELVIS II, the Emona DATEx and SFP control
Experiment 4 (Vol. 1): Using the Emona DATEx to model equations (desirable)
Experiment 13 (Vol. 1): Sampling and reconstruction
Experiment 14 (Vol. 1): PCM encoding
Experiment 15 (Vol. 1): PCM decoding
Experiment 9 (Vol. 2): Signal-to-noise ratio and eye diagrams (optional)

Equipment

- Personal computer with appropriate software installed
- NI ELVIS II plus USB cable and power pack
- Emona DATEx experimental add-in module
- Two BNC to 2mm banana-plug leads
- Assorted 2mm banana-plug patch leads

Procedure

Part A – Setting up the PCM encoding-decoding scheme

To measure the signal-to-noise distortion ratio (SNDR) of a PCM encoding-decoding scheme, you must first set one up. The next part of the experiment gets you to do this.

1. Ensure that the NI ELVIS II power switch at the back of the unit is off.

2. Carefully plug the Emona DATEx experimental add-in module into the NI ELVIS II.

3. Set the *Control Mode* switch on the DATEx module (top right corner) to *PC Control*.

4. Connect the NI ELVIS II to the PC using the USB cable.

   Note: This may already have been done for you.

5. Turn on the NI ELVIS II power switch at the rear of the unit then turn on its *Prototyping Board Power* switch at the top right corner near the power indicator.

6. Turn on the PC and let it boot-up.

7. Launch the NI ELVISmx software.

8. Launch the DATEx soft front-panel (SFP) and check that you have soft control over the DATEx board.

9. Set the PCM Encoder module's soft *Mode* switch to the *PCM* position.

10. Connect the set-up shown in Figure 2 below.

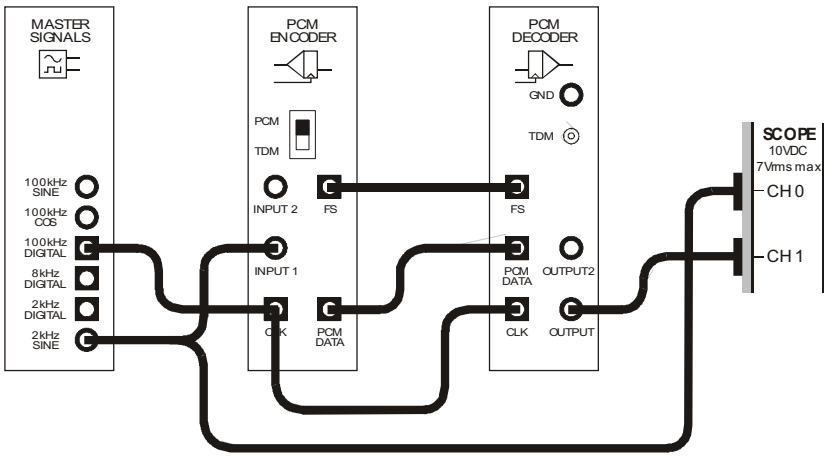

Figure 2

 © 2008 Emona Instruments

The set-up in Figure 2 can be represented by the block diagram in Figure 3 below. The Master Signals module's *2kHz SINE* output is the message. The PCM Encoder module converts the message to a digital signal which inevitably contains quantisation errors. The PCM Decoder module returns the digital signal to a sampled version of the original signal consisting of quantisation noise and aliases.

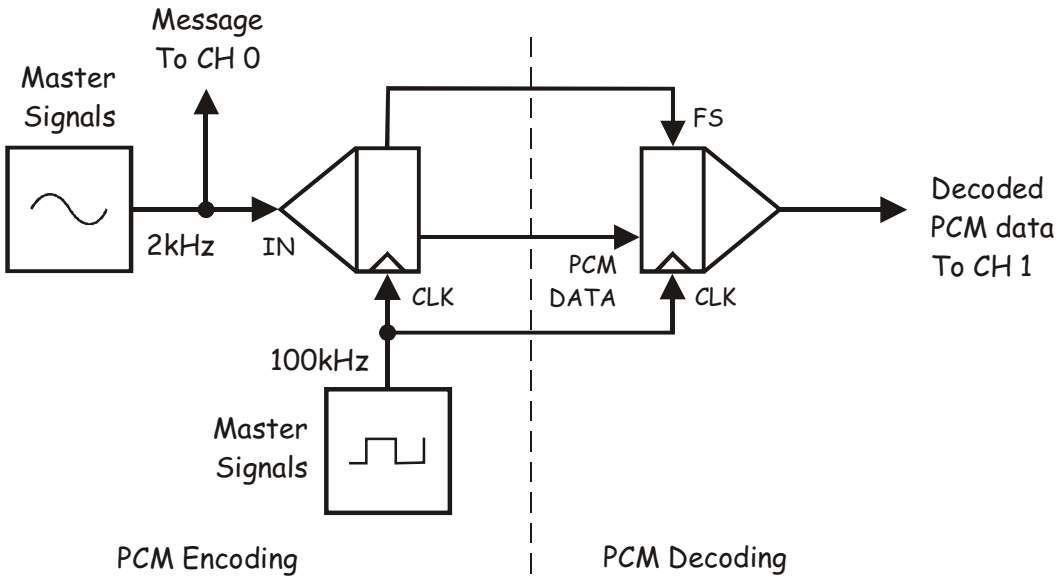

Figure 3

11. Launch and run the NI ELVIS II Oscilloscope VI.

12. Adjust the scope to view the two or so cycles of the message signal as a stable display. Essential scope settings include:

    - *Trigger Type* to *Edge*
    - *Trigger Source* to *CH 0*

13. Activate the scope's Channel 1 input to observe the signal on the PCM Decoder module's output as well as the message.



Ask the instructor to check your work before continuing.

© 2008 Emona Instruments

Part B – Measuring the SNDR of the signal on the PCM decoder's output

To determine the signal-to-noise distortion ratio (SNDR) of the signal on the PCM decoder's output by measurement, you must first measure its RMS voltage.

14. Read the RMS voltage of the signal on the PCM Decoder module's output. Record this value in Table 1 on page 10-11.

    Note: This is already being measured and is displayed towards the bottom left corner of the scope. Remember though, the PCM decoder module's output is connected to the scope's Channel 1 input.



Ask the instructor to check your work before continuing.

Next, you must measure the RMS value of the noise on its own. This involves nulling the message component in the signal on the PCM decoder's output and the next part of the experiment gets you to do this.

15. Locate the Adder module on the DATEx SFP and set its soft *G* and *g* controls to about the middle of their travel.

16. Locate the Phase Shifter module on the DATEx SFP and set its soft *Phase Change* control to the *0°* position.

17. Set the Phase Shifter module's soft *Phase Adjust* control about the middle of its travel.

18. Modify the set-up as shown in Figure 4 on the next page.

© 2008 Emona Instruments

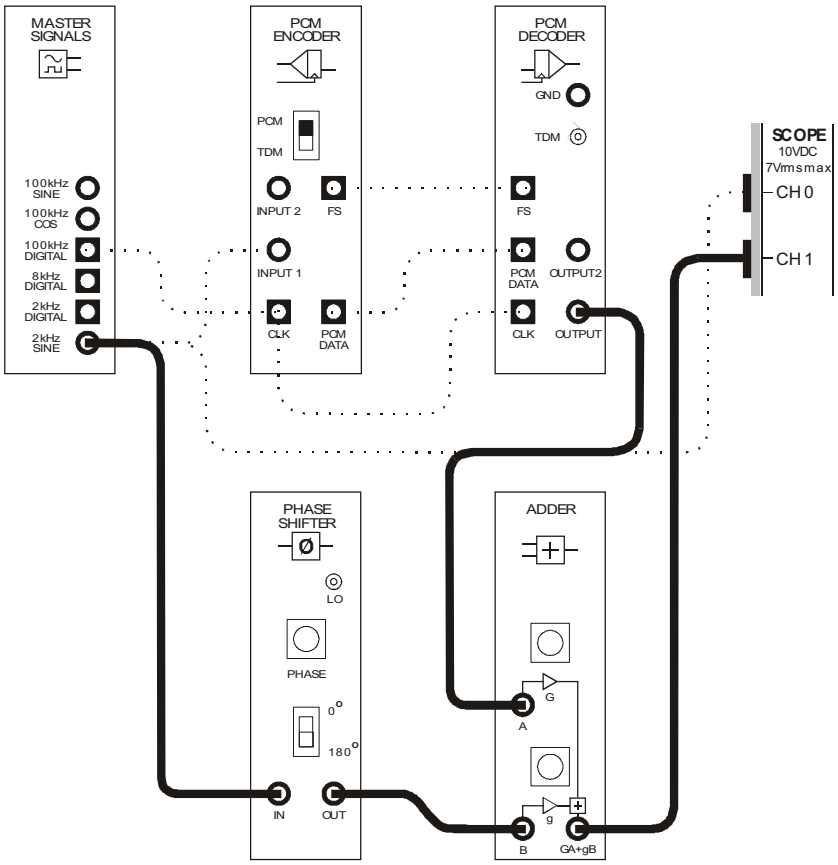

Figure 4

The additions to this set-up can be represented by the block diagram in Figure 5 on the next page. The 2kHz message is stolen from the Master Signals module and phase shifted using the Phase Shifter module. The signal is then added to the signal on the PCM Decoder module's output using the Adder module.

© 2008 Emona Instruments

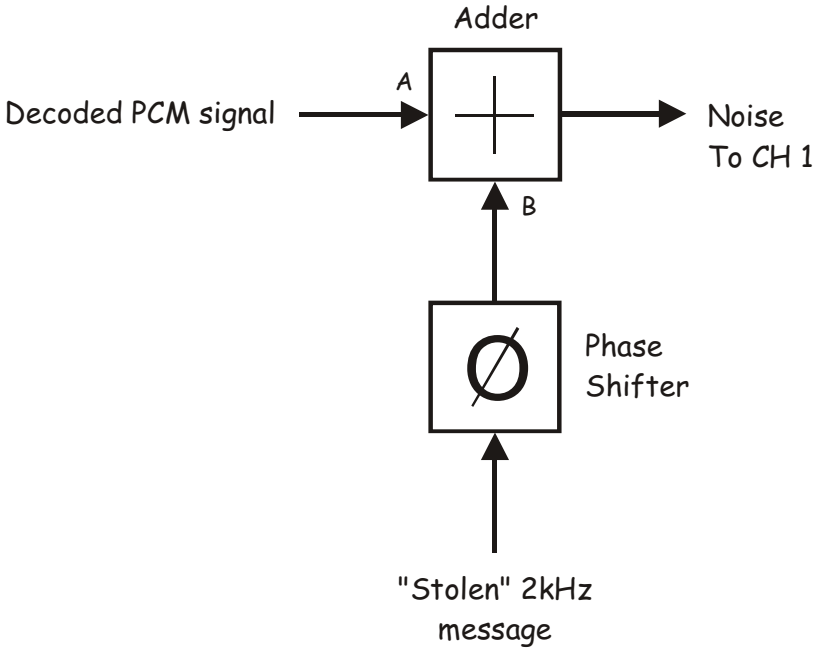

Figure 5

The entire set-up can be represented by the block diagram in Figure 6 below.

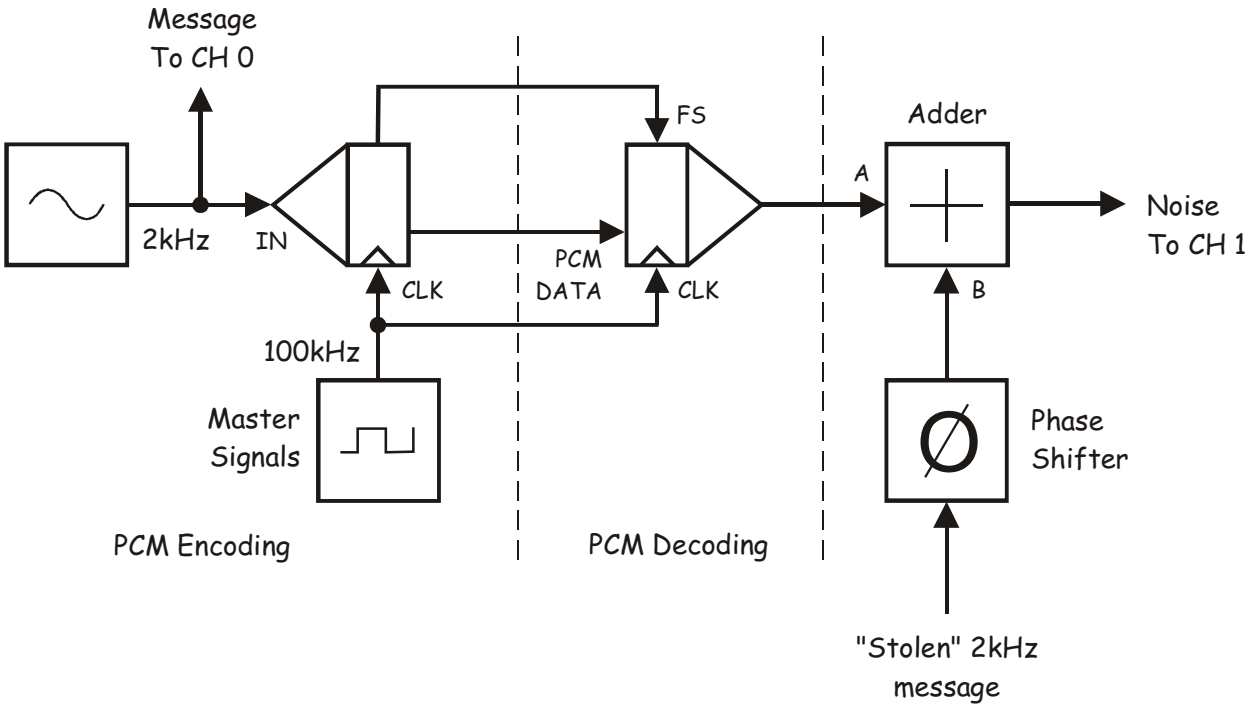

Figure 6

 © 2008 Emona Instruments

19. Disconnect the lead to the Adder module's *B* input.

20. Adjust the Adder module's soft *G* control until its output is as close to 4Vp-p as you can achieve.

21. Reconnect the lead to the Adder module's *B* input.

22. Disconnect the lead to the Adder module's *A* input.

23. Adjust the Adder module's soft *g* control until its output is as close to 4Vp-p as you can achieve.

    Note: Once done, the gain of the Adder module's two inputs close to equal.

24. Reconnect the lead to the Adder module's *A* input.

25. Vary the Phase Shifter module's soft *Phase Adjust* control left and right.

    Note: As you do this, you'll vary the phase relationship between the signal on the PCM decoder's output and the stolen message. Importantly, when the phase relationship between the stolen message and the message component of the decoded PCM signal is 180°, they cancel each other leaving only noise.

26. Adjust the Phase Shifter module's soft *Phase Adjust* control until you obtain the smallest output from the Adder module.

    Tip: Use the RMS measurement to achieve this.

To obtain the most accurate measurement of noise, the recovered message must be nulled as much as the set-up will allow. This requires a little fine-tuning of the current Adder and Phase Shifter module settings. The next few steps get you to do this.

27. Set the scope's Channel 1 *Scale* control to *500mV/div*.

28. Vary the Adder module's soft *G* control just a little to see if you can make its output smaller.

    Tip: Use the keyboard's *TAB* and arrow keys to for fine adjustments.

29. Adjust the Phase Shifter module's soft *Phase Adjust* control just a little to see if you can make the Adder module's output smaller.

    Tip: Again, use the keyboard's *TAB* and arrow keys for this.

30. Repeat Step 28 then Step 29 one more time to see you make the Adder module's output even smaller.

31. Once you have fully nulled the message component in the signal on the PCM decoder's output, the remainder is noise. Record the size of the noise in Table 1 below.



Ask the instructor to check your work before continuing.

The next part of the experiment gets you to calculate the SNDR of an 8-bit PCM encoding-decoding scheme.

32. Calculate and record the SNDR figure using the equation:

$$SNDR = \frac{S+N}{N}$$

33. Convert the SNDR figure to decibels and record this also.

Table 1

Signal on the PCM decoder's output	
Noise	
SNDR	
SNDR (in decibels)	

Question 1

What factor limits the accuracy of this measurement?

 © 2008 Emona Instruments

Question 2

What two factors contribute to the noise component that you measured?



Ask the instructor to check your work before continuing.

© 2008 Emona Instruments

Part C – Measuring the SNDR of a complete PCM system

PCM encoding-decoding systems are unlikely to use the signal on the PCM decoder's output without further conditioning because, apart from the quantisation noise, it contains components not in the original message (the aliases or images). These may be audible and so filtering is usually used to reconstruct the message by rejecting the aliases. Usefully, the filtering process also filters out some of the quantisation noise. The next part of the experiment gets you to complete the PCM system by adding filters of differing grades and measuring their effect on SNDR.

34. Modify the set-up as shown in Figure 7 below.

    Note: Disconnect the patch lead to the Adder module's *A* input and leave it floating for a moment.

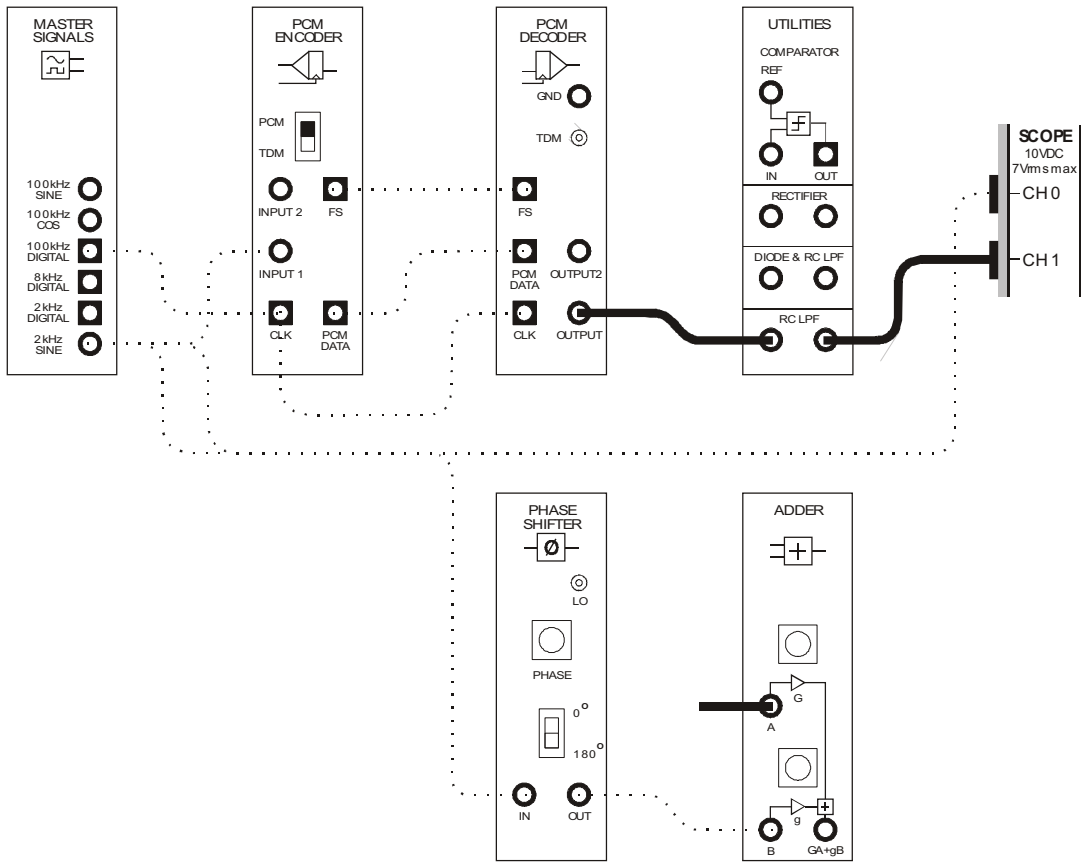

Figure 7

 © 2008 Emona Instruments

The set-up in Figure 7 can be represented by the block diagram in Figure 8 below. The RC LPF module is used to reconstruct the message by filtering.

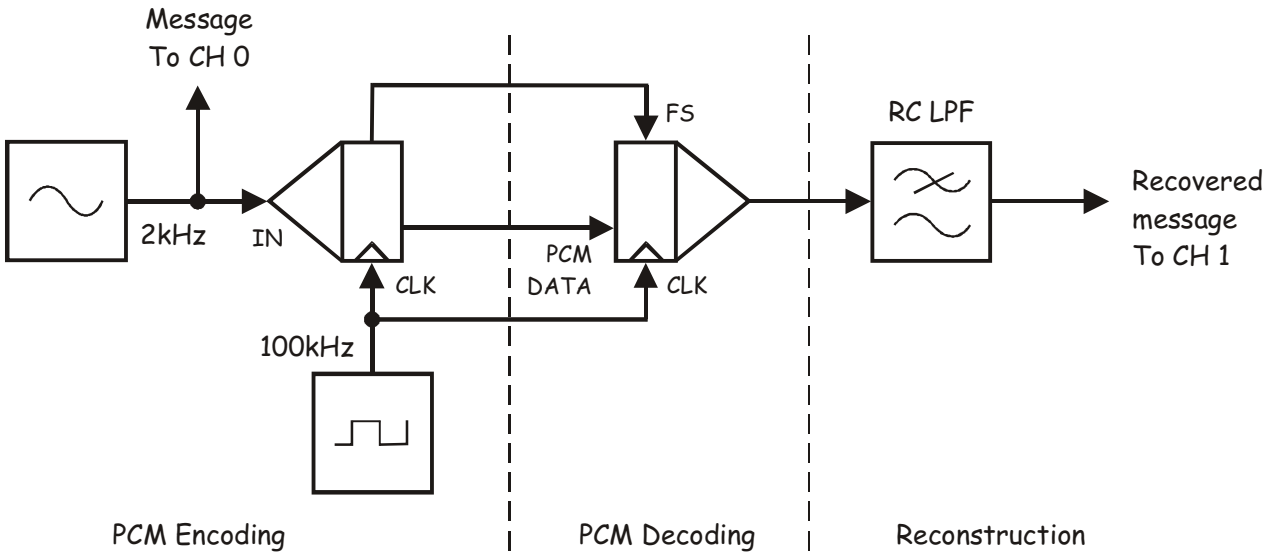

Figure 8

35. Return the scope's Channel 1 *Scale* control to *1V/div*.

36. Compare the original message and the reconstructed message.

    Note: The signals should be similar but the reconstructed message will show obvious signs of distortion as not all of the aliases are removed.

37. Read the RMS voltage of the reconstructed message. Record this value in Table 2 on page 10-16.

38. Modify the set-up as shown in Figure 9 below.

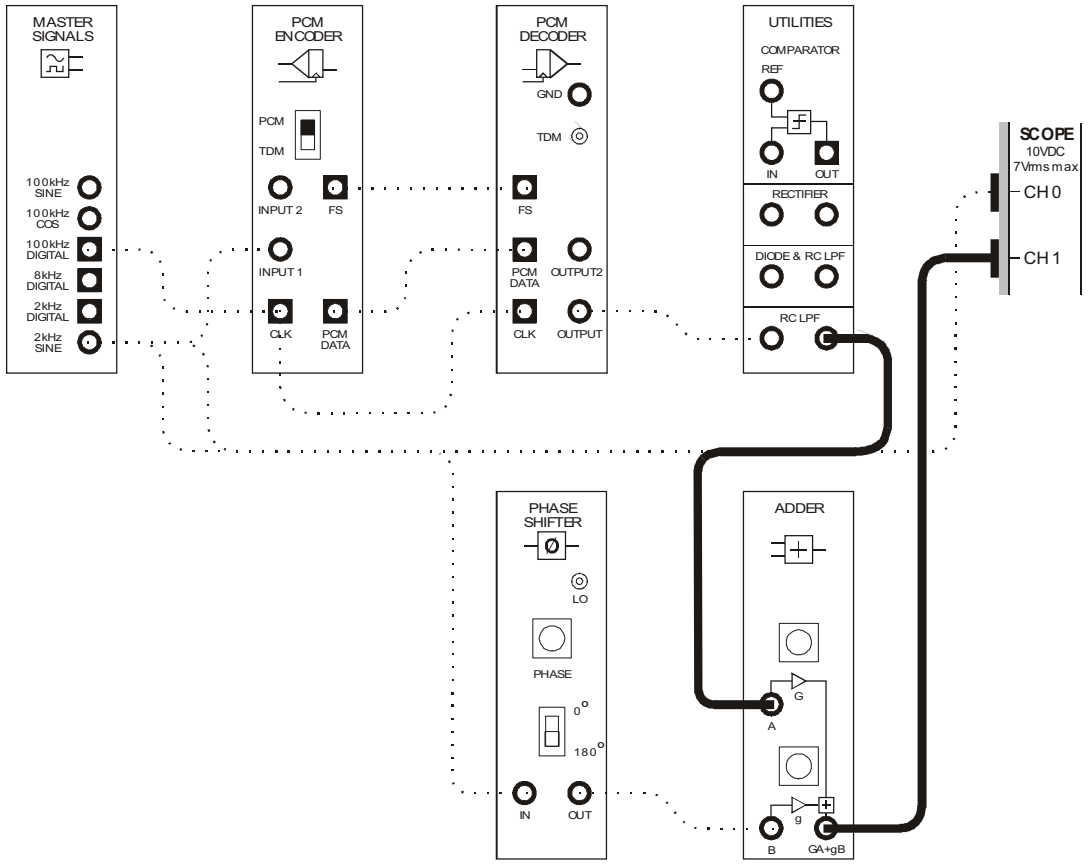

Figure 9

This set-up can be represented by the block diagram in Figure 10 on the next page. The nulling circuit has been added to remove the component on the filter's output that is at the message frequency leaving only the noise.

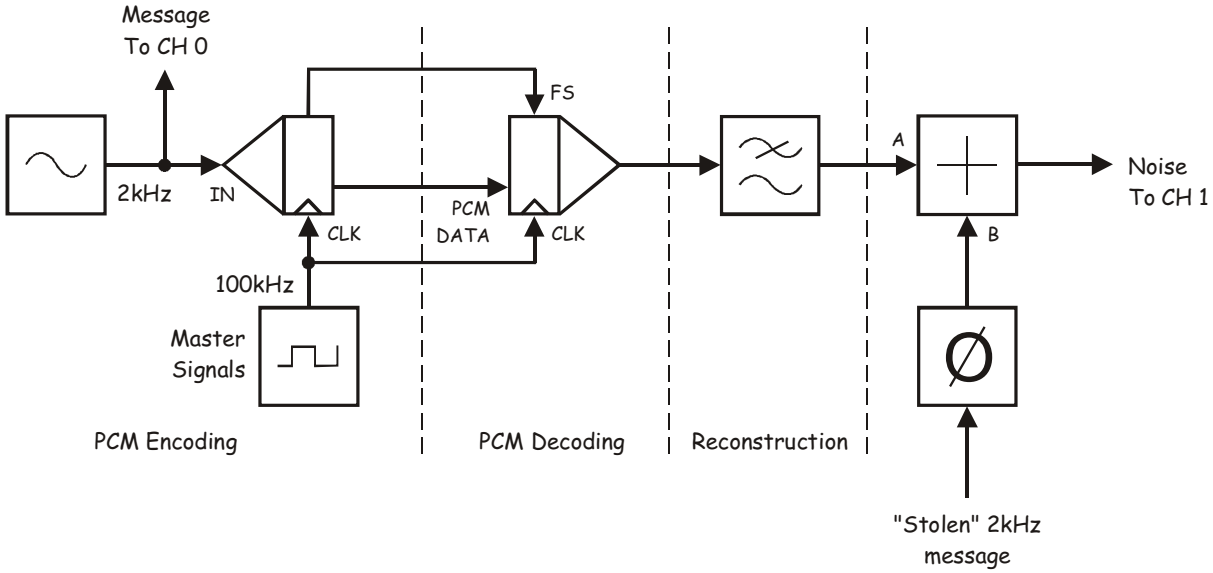

Figure 10

39. Set the scope's Channel 1 *Scale* control to *500mV/div*.

40. Adjust the Phase Shifter module's soft *Phase Adjust* control until you obtain the smallest output from the Adder module.

41. Tweak the Adder module's soft *G* control to see if you can make its output smaller.

42. Tweak the Phase Shifter module's soft *Phase Adjust* control to see if you can make the Adder module's output even smaller.

43. Once you have fully nulled the message component in the reconstruction filter's output, the remainder is noise. Record the size of the noise in Table 2 below.

44. Calculate and record the SNDR figure as a ratio and in decibels.

Table 2

Signal plus noise	
Noise	
SNDR	
SNDR (in decibels)	

© 2008 Emona Instruments

Question 3
How does this SNDR figure compare to that for the PCM system without reconstruction filtering?

Question 4
Explain why this change in SNDR has occurred.



Ask the instructor to check your work before continuing.

Importantly, an RC LPF is a relatively simple filter to implement and as such doesn't have the performance characteristics of more sophisticated filter designs. This type of filter would be used for message reconstruction of PCM systems in products for sale in price-sensitive markets such as intercoms. However, the domestic audio and pro-audio markets are not quite as price-sensitive and so more sophisticated and expensive filtering can be used. The next part of the experiment gets you to measure the effect on SNDR of better filtering.

45. Locate the Tuneable Low-pass Filter module on the DATEx SFP and adjust its soft *Gain* control for maximum gain.

46. Adjust the Tuneable Low-pass Filter module's soft *Cut-off Frequency Adjust* control for the highest cut-off frequency.

47. Modify the set-up as shown in Figure 11 on the next page.

 © 2008 Emona Instruments

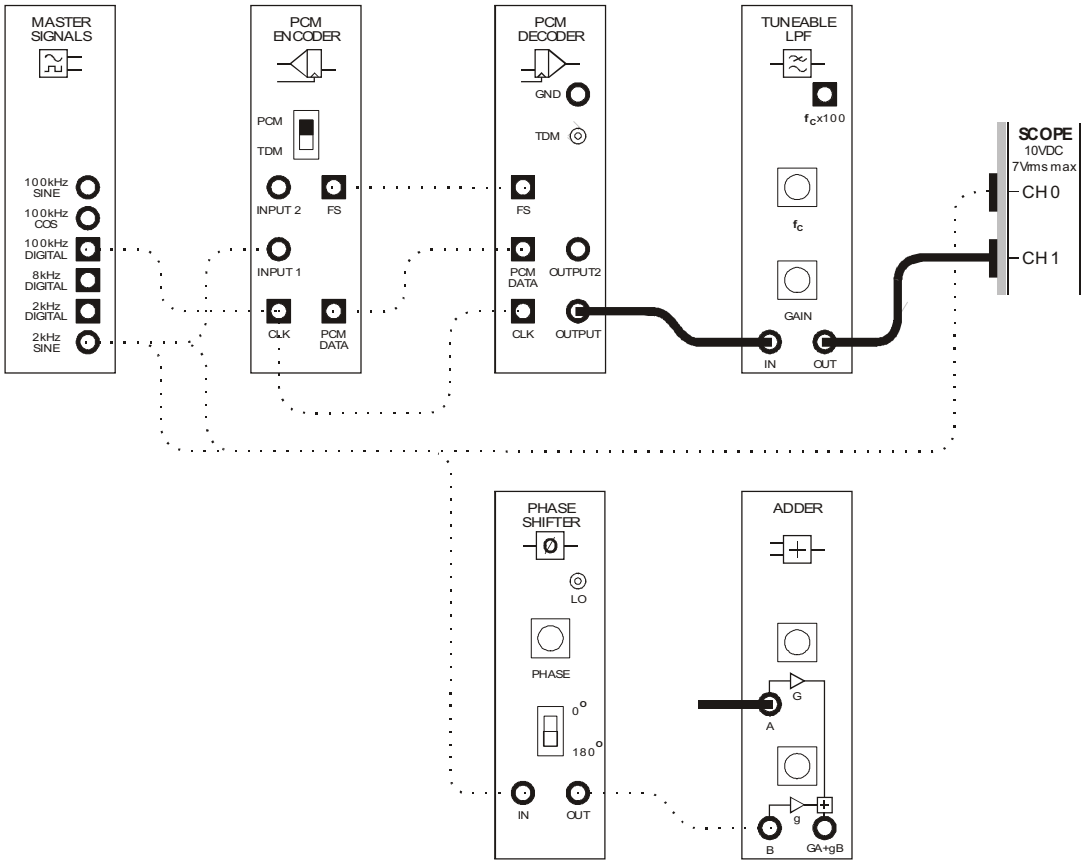

Figure 11

This set-up can be represented by the block diagram in Figure 12 below. The Tuneable Low-pass Filter module is now being used to reconstruct the message.

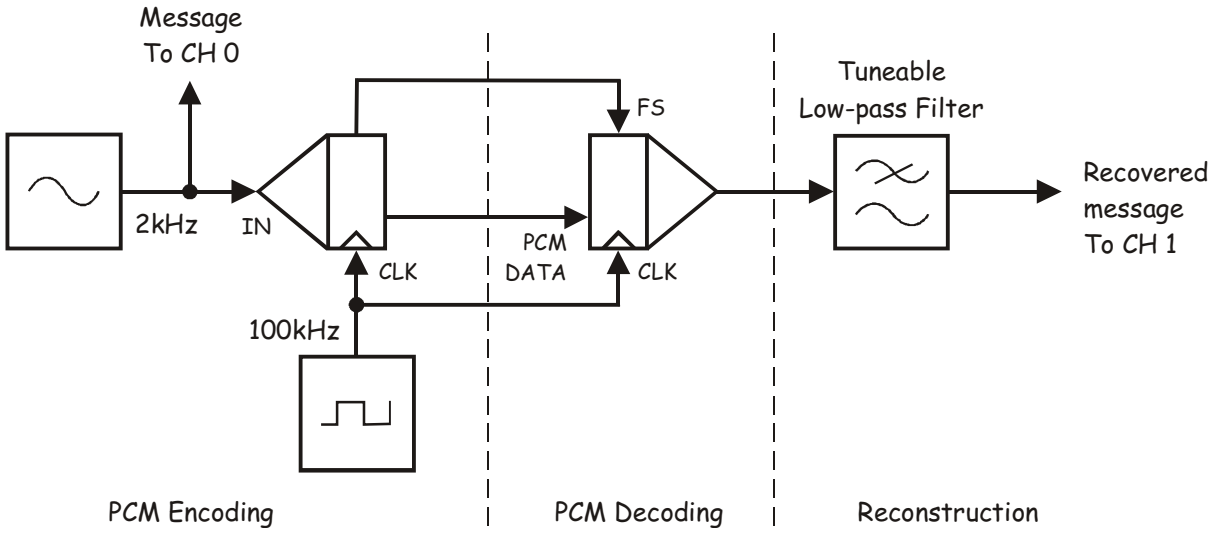

Figure 12

© 2008 Emona Instruments

48. Return the scope's Channel 1 *Scale* control to *1V/div*.

49. Compare the original message and the reconstructed message.

50. Slowly reduce the Tuneable Low-pass Filter module's cut-off frequency until the message has been recovered (ignoring phase shift).

51. Read the RMS voltage of the reconstructed message. Record this value in Table 3 on page 10-21.

52. Modify the set-up as shown in Figure 13 below.

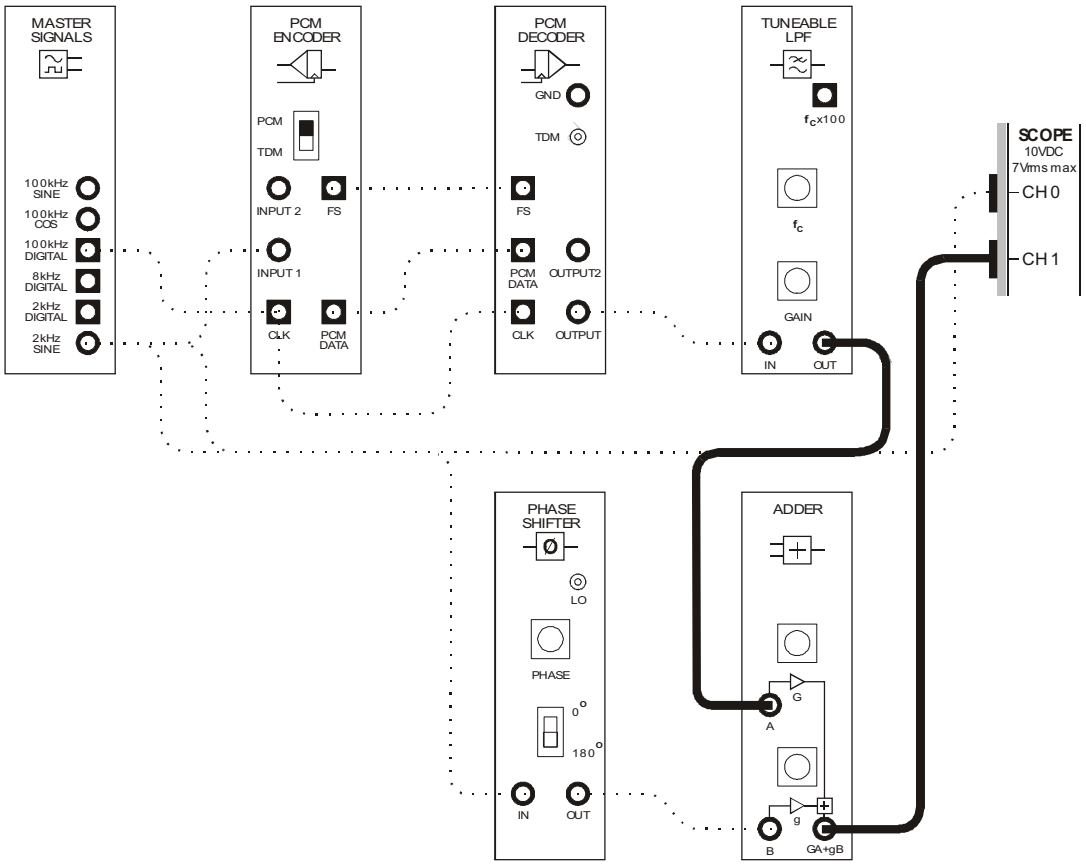

Figure 13

 © 2008 Emona Instruments

The set-up in Figure 13 can be represented by the block diagram in Figure 14 below. The nulling circuit has been added to remove the component on the filter's output that is at the message frequency leaving only the noise.

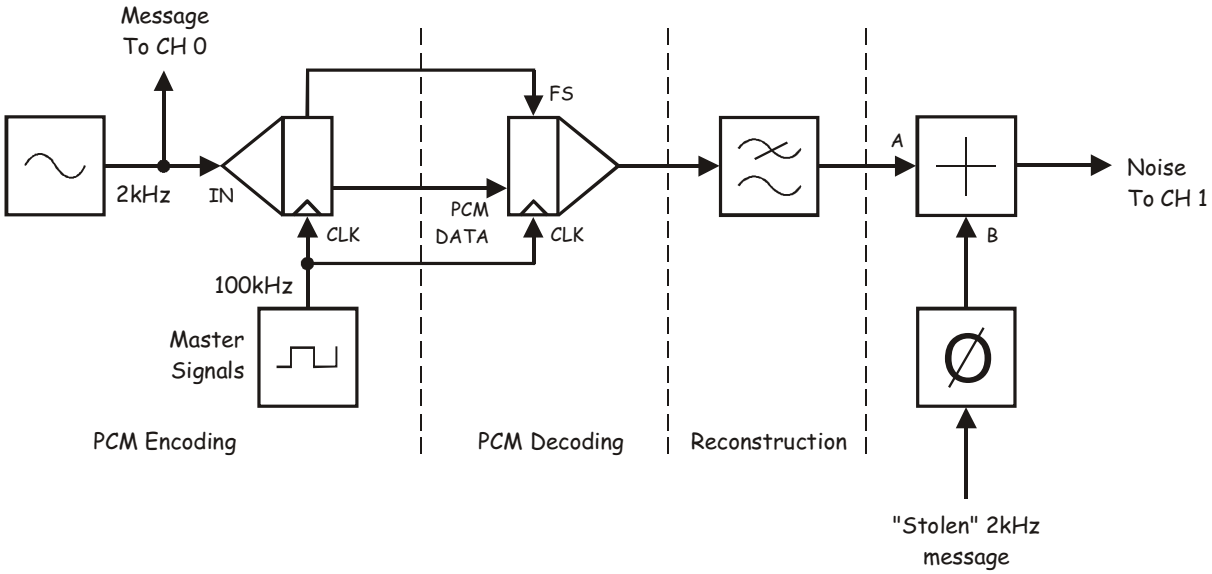

Figure 14

53. Make some initial adjustments of the Phase Shifter module's soft *Phase Adjust* control and the Adder module's soft *G* control to obtain a small output from the Adder module.

54. Set the scope's Channel 1 *Scale* control to *100mV/div*.

55. Tweak the Phase Shifter module's soft *Phase Adjust* control and the Adder module's soft *G* control to see if you can make the Adder module's output even smaller.

56. Once you have fully nulled the message component in the reconstruction filter's output, the remainder is noise. Record the size of the noise in Table 3 on the next page.

57. Calculate and record the SNDR figure as a ratio and in decibels.

Table 3

Signal plus noise	
Noise	
SNDR	
SNDR (in decibels)	

Question 5

How does this SNDR figure compare to the SNDR when the reconstruction filter was implemented using an RC LPF?

Question 6

What specific characteristic of the Tuneable Low-pass Filter module's frequency response is much better than that of the simple RC LPF?



Ask the instructor to check your work before finishing.

 © 2008 Emona Instruments

Name: _____

Class: _____

11 - ASK demodulation using product detection

Experiment 11 – ASK demodulation using product detection

Preliminary discussion

Amplitude shift keying (ASK) is one of several digital modulation techniques used for frequency division multiplexing of communications channels. Despite its grand name, ASK is basically amplitude modulation (AM) with digital data for the message instead of speech and/or music. That being the case, methods of demodulating AM signals such as the envelope detector can also be used to demodulate ASK signals. In fact, the envelope detector is used to demodulate ASK signals in another Emona DATEx experiment (see Experiment 17 in Volume 1).

The product detector is another method of demodulating AM and ASK signals (as well as others). Figure 1 below shows the product detector used as an ASK demodulator.

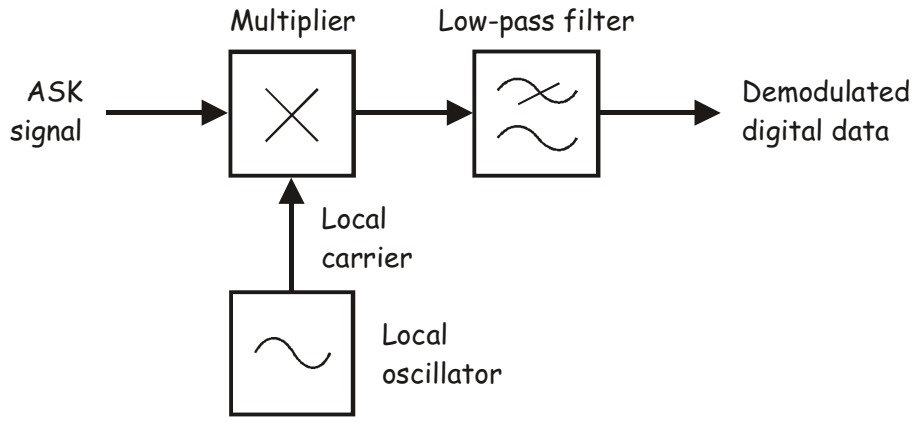

Figure 1

As you can see, the incoming ASK signal is one input to a functional block called a *multiplier*. The multiplier's other input is a pure sinewave (called the *local carrier*) that is generated by the receiver and must be the same frequency as the ASK signal's carrier for demodulation to be successful. The multiplier's name fully explains its function and so a little math is necessary to explain its operation.

Mathematically, the multiplication of the multiplier's inputs can be described as:

Product detector's output = the ASK signal × the local carrier

If the ASK component in the equation is replaced by its spectral composition, it can be rewritten as:

Output = [ASK carrier + (ASK carrier + message) + (ASK carrier - message)] × the local carrier
The USB The LSB

To predict the outcome of this multiplication process, it's important to understand that whenever two sinewaves are multiplied together, the result is another set of sinewaves with frequencies equal to the sum and difference of the original input signals. That being the case, the multiplier's output includes sinewaves with the following frequencies:

- Local carrier + ASK carrier
- Local carrier – ASK carrier
- Local carrier + (ASK carrier + message)
- Local carrier + (ASK carrier - message)
- Local carrier - (ASK carrier + message) which simplifies to just the message
- Local carrier - (ASK carrier - message) which also simplifies to just the message

Importantly, notice that two of the products are copies of the original message. Usefully, they're in phase with each other and so they simply add together to make one larger copy of the message. That said, as the analysis above shows, the copy of the message is part of a signal containing other sinewaves that must be removed before the recovered message is useable. Provided the original carrier signal is sufficiently high enough in frequency relative to the original message, a low-pass filter can be used for this purpose.

Complex message signals like digital data contain a number of sinewaves including the digital data signal's fundamental (at a frequency equal to the digital data signal's bit-rate) and whole even and odd number multiples of the fundamental. This means that the copies of the message on the multiplier's output are signals containing copies of the all of the digital data signal's fundamental and harmonics. However, the necessary filtering of the multiplier's output will inevitably remove a number of the harmonics and change the recovered digital data signal's shape. How much the signal's shape changes depends on the filter's cut-off frequency and the original digital data signal's bit-rate.

The experiment
In this experiment you'll use the Emona DATEx to generate an ASK signal using the switching method. Digital data for the message is modelled by the Sequence Generator module. You'll then recover the data using a product detector. Finally, you'll investigate the importance of carrier synchronisation in product detection.

It should take you about 40 minutes to complete this experiment.

Pre-requisites:
Experiments 1, 2 & 3 (Vol. 1): Intros to the NI ELVIS II, the Emona DATEx and SFP control
Experiment 13 (Vol. 1): Sampling and reconstruction (desirable)
Experiment 17 (Vol. 1): Amplitude Shift Keying

Equipment

- Personal computer with appropriate software installed
- NI ELVIS II plus USB cable and power pack
- Emona DATEx experimental add-in module
- Three BNC to 2mm banana-plug leads
- Assorted 2mm banana-plug patch leads

Procedure

Part A – Generating an ASK signal
To experiment with product detection of ASK signals you need an ASK signal. The first part of the experiment gets you to set one up.

1. Ensure that the NI ELVIS II power switch at the back of the unit is off.

2. Carefully plug the Emona DATEx experimental add-in module into the NI ELVIS II.

3. Set the *Control Mode* switch on the DATEx module (top right corner) to *PC Control*.

4. Connect the NI ELVIS II to the PC using the USB cable.

   Note: This may already have been done for you.

5. Turn on the NI ELVIS II power switch at the rear of the unit then turn on its *Prototyping Board Power* switch at the top right corner near the power indicator.

6. Turn on the PC and let it boot-up.

7. Launch the NI ELVISmx software.

8. Connect the set-up shown in Figure 2 below.

Note: Insert the black plugs of the oscilloscope leads into a ground (*GND*) socket.

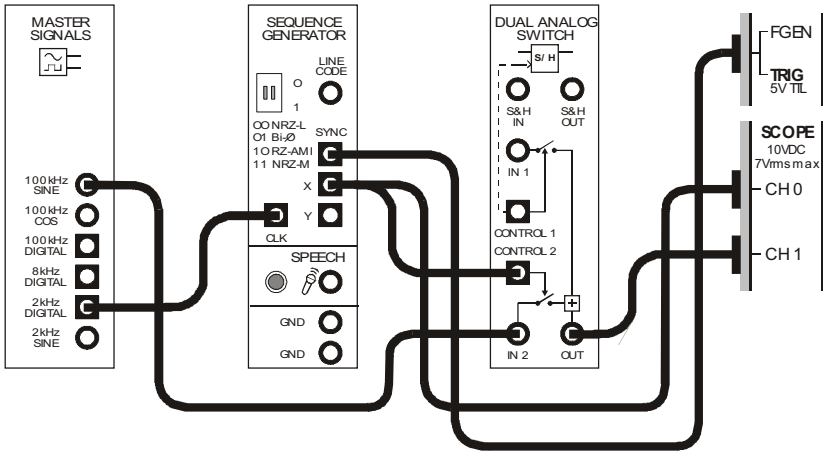

Figure 2

This set-up can be represented by the block diagram in Figure 3 below. The Sequence Generator module is used to model a digital signal and its SYNC output is used to trigger the scope to provide a stable display. The Dual Analog Switch module is used to generate the ASK signal with a 100kHz carrier.

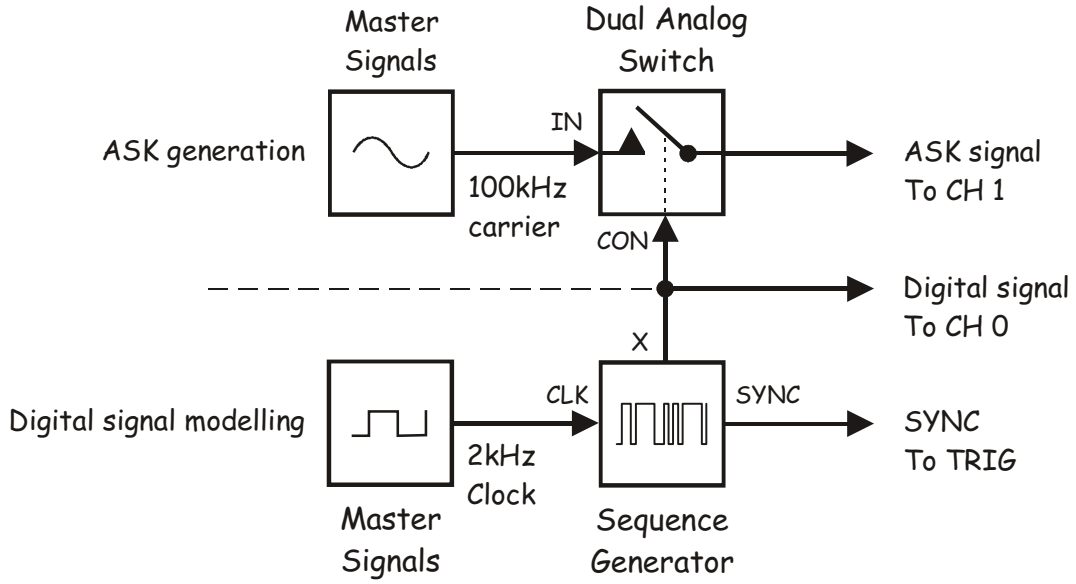

Figure 3

9. Launch and run the NI ELVIS II Oscilloscope VI.

10. Adjust the scope to view the digital data and the ASK signal. Essential scope settings include:

    - Scale control for Channel 0 to *2V/div*
    - *Input Coupling* controls for both channels to *DC*
    - *Timebase* control to *1ms/div*
    - *Trigger Type* control to *Digital*

11. Verify that the Dual Analog Switch module's output is an ASK signal by checking that its upper envelope is a copy of the message and its lower envelope is an inverted copy of the message.



Ask the instructor to check your work before continuing.

Part B – Demodulating an ASK signal using product detection

The next part of the experiment gets you to implement a product detector and use it to demodulate the ASK and recover the message.

12. Launch the DATEx soft front-panel (SFP) and check that you have soft control over the DATEx board.

13. Locate the Tuneable Low-pass Filter module on the DATEx SFP and turn its soft *Gain* control fully clockwise.

14. Turn the Tuneable Low-pass Filter module's soft *Cut-off Frequency Adjust* control fully clockwise.

15. Modify the set-up as shown in Figure 4 below.

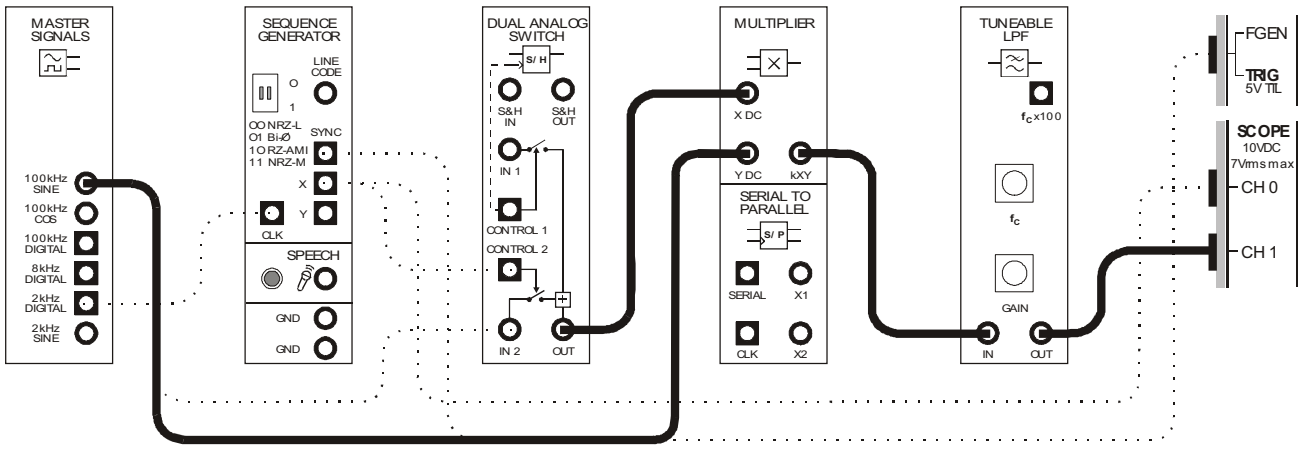

Figure 4

The ASK generation and demodulation parts of the set-up can be represented by the block diagram in Figure 5 on the next page. The Multiplier and Tuneable Low-pass Filter modules are used to implement a product detector. The product detector's local carrier is "stolen" from the modulator to ensure carrier synchronisation between the modulator and demodulator.

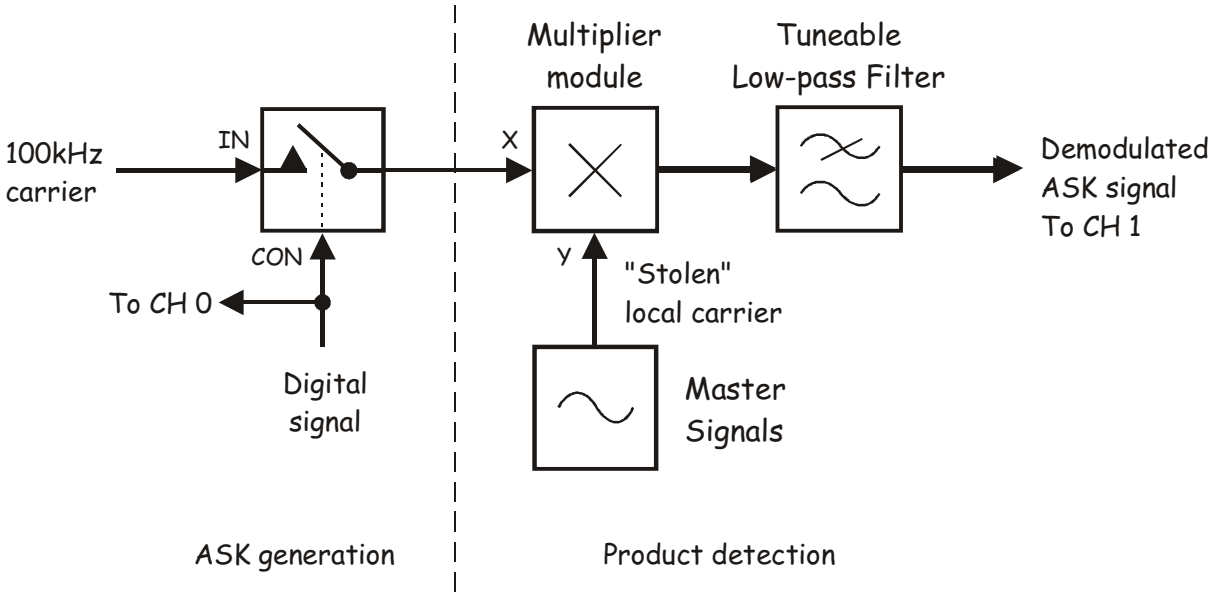

Figure 5

16. Compare the original and recovered digital signals.

Question 1
Why is the recovered digital signal not a perfect copy of the original?

Question 2
What can be used to "clean-up" the recovered digital signal?

Ask the instructor to check your work before continuing.

Part C – Carrier synchronisation

Crucial to the correct operation of product detection is synchronisation between the ASK signal's carrier and the product detector's local carrier. Any phase or frequency difference between the two signals adversely affects the system's performance.

The effect of phase errors

Recall that the product detector generates two copies of the message. Provided the phase of the modulator and demodulator carriers are identical, the copies of the message are in phase with each other and so they simply add together to form one bigger message. However, if there's a phase error between the carriers, the product detector's two messages have a phase error also. One of them has the sum of the phase errors and the other the difference. In other words, the two messages are out of phase with each other.

If the carriers' phase error is small (say about 10°) the two messages still add together to form one bigger signal but not as big as when the carriers are in phase. As the carriers' phase error increases, the recovered message gets smaller. Once the phase error exceeds 45° the two messages begin to subtract from each other. When the carriers' phase error is 90° the two messages end up 180° out of phase and completely cancel each other out.

Interestingly, as the carriers' phase error exceeds 90° the phase error moves beyond cancellation to provide an output signal whose size increases to maximum once the error reaches 180°. However, the output signal is an inverted copy of the message. This is not a problem when the message is speech and/or music but has obvious implications for digital data signals.

The next part of the experiment lets you observe the effects of carrier phase error.

17. Locate the Phase Shifter module on the DATEx SFP and set its soft *Phase Change* control to the *180°* position.

18. Set the Phase Shifter module's soft *Phase Adjust* control to about the middle of its travel.

19. Modify the set-up as shown in Figure 6 on the next page.

 © 2008 Emona Instruments

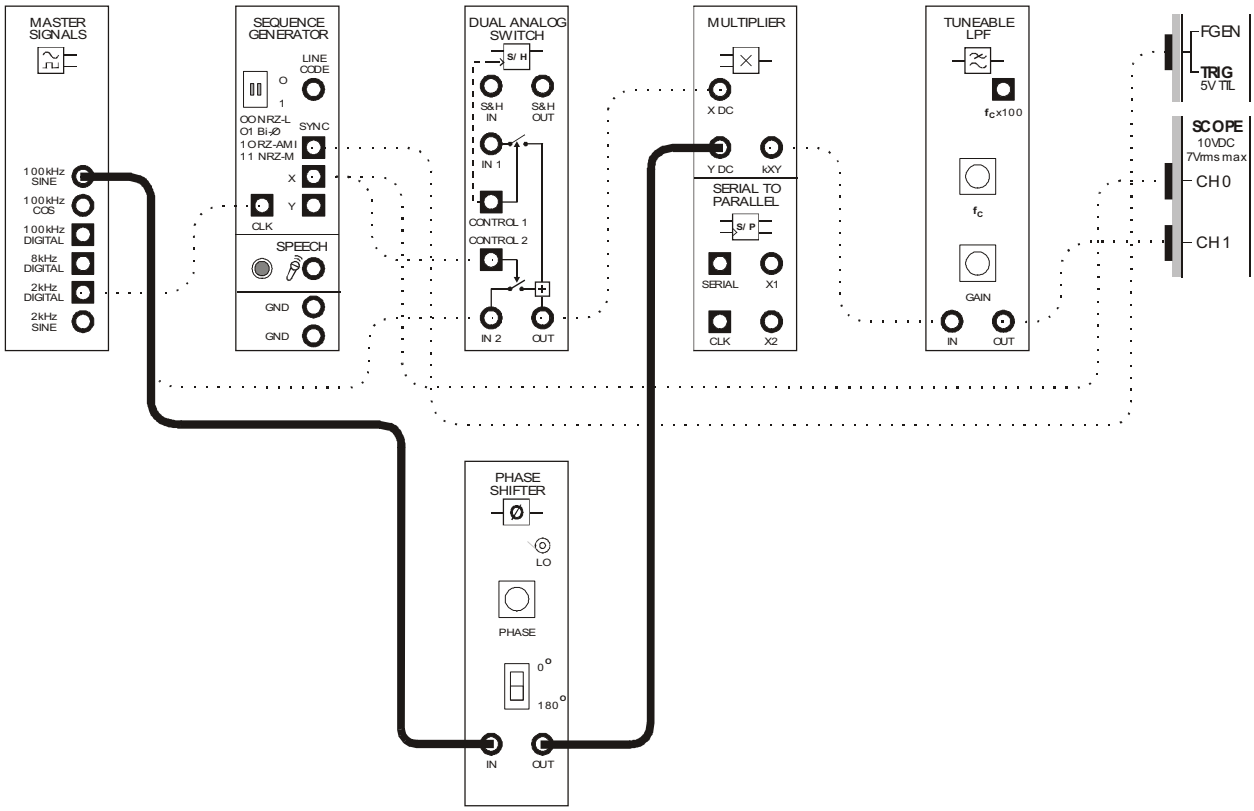

Figure 6

This set-up can be represented by the block diagram in Figure 7 below. The Phase Shifter module allows a phase error to be introduced between the ASK modulator's carrier and the product detector's local carrier.

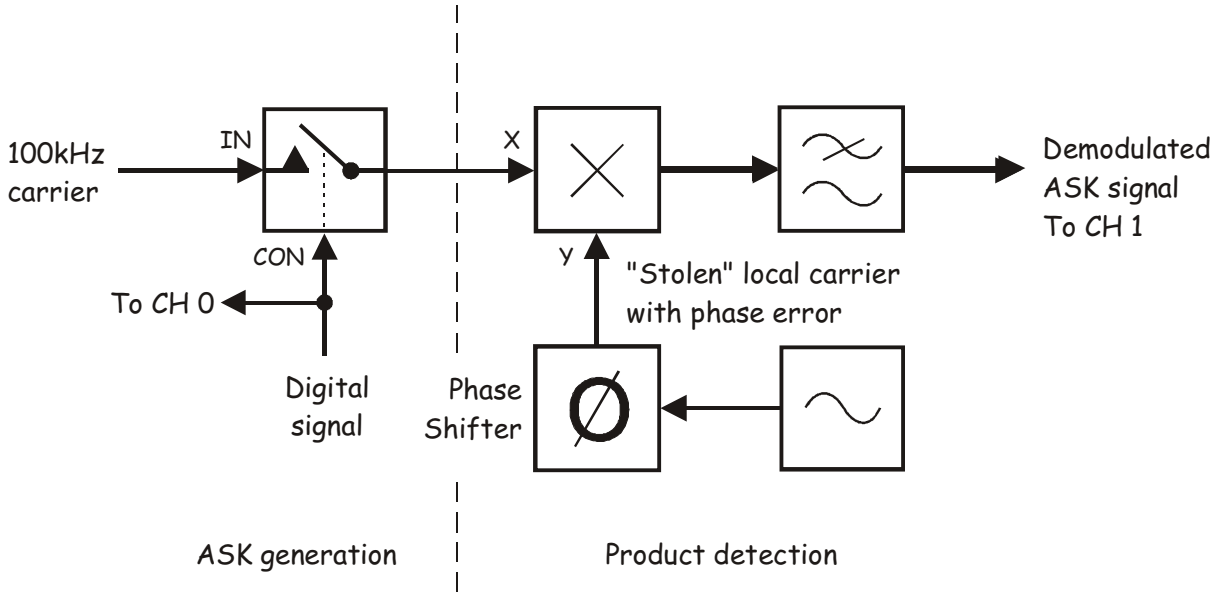

Figure 7

20. Vary the Phase Shifter module's soft *Phase Adjust* control left and right while watching the effect on the recovered digital signal.

21. Use the keyboard's *TAB* and left arrow keys to adjust the Phase Shifter module's soft *Phase Adjust* control until the recovered message is largest and a normal copy of the original digital signal.

Question 3
Given the recovered digital signal's message's amplitude, what is the phase difference between the two carriers? **Tip:** If you're not sure, reread the notes on page 11-9.

22. Compare the carriers by connecting the scope's Channel 0 input to the Master Signals module's *100kHz SINE* output, its Channel 1 input to the Phase Shifter module's output and setting its *Timebase* control to the *5µs/div* setting.

Question 4
Why aren't the carriers in phase as predicted?

23. Return the scope's connections and *Timebase* control to their original positions.

24. Adjust the Phase Shifter module's soft *Phase Adjust* control until the recovered message is smallest.

Question 5
Given the size of the recovered message's amplitude, what is the phase difference between the two carriers?

25. Adjust the Phase Shifter module's soft *Phase Adjust* control until the recovered message is largest and inverted.

Question 6

Given the size and shape of the recovered message's amplitude, what is the phase difference between the two carriers?



Ask the instructor to check your work before continuing.

The effect of frequency errors

When there's a frequency error between the modulator's carrier and the product detector's local carrier, there is a corresponding frequency error in all of the sinewaves on the multiplier's output. Importantly, the two copies of the original message are affected differently due to the multiplication process. One copy of the message contains all of the sinewaves in the original but offset below their correct frequency by the error between the carriers. The other contains all of the sinewaves in the original but offset above their correct frequency by the error between the carriers.

If the frequency error between carriers is small the effect is interesting. The frequency of the fundamental and harmonics that make up the two recovered digital signal digital signals are close to their original values and this would suggest that the combination of the two would properly recover the original digital data. Certainly, any distortion could be cleaned-up using a comparator. However, the frequency error between the carriers has the same effect as rolling phase shift between them and so the two recovered messages alternately reinforce and cancel each. The result is a final digital data signal with a continuously changing amplitude that is periodically inverted (and so can't simply be cleaned-up using a comparator).

Larger frequency errors introduce enough frequency offset to one of the recovered digital data signal's fundamental and harmonics to push them outside the low-pass filter's pass-band and change the shape of the final digital signal (in addition to continuously changing its amplitude).

The next part of the experiment lets you observe the effects of carrier frequency error.

26. Launch and run the NI ELVIS II Function Generator VI.

27. Adjust the function generator's soft controls for an output with the following specifications:

    - Waveshape: Sine
    - Frequency: 100kHz exactly
    - Amplitude: 4Vpp
    - DC Offset: 0V

28. Modify the set-up as shown in Figure 8 on the next page.

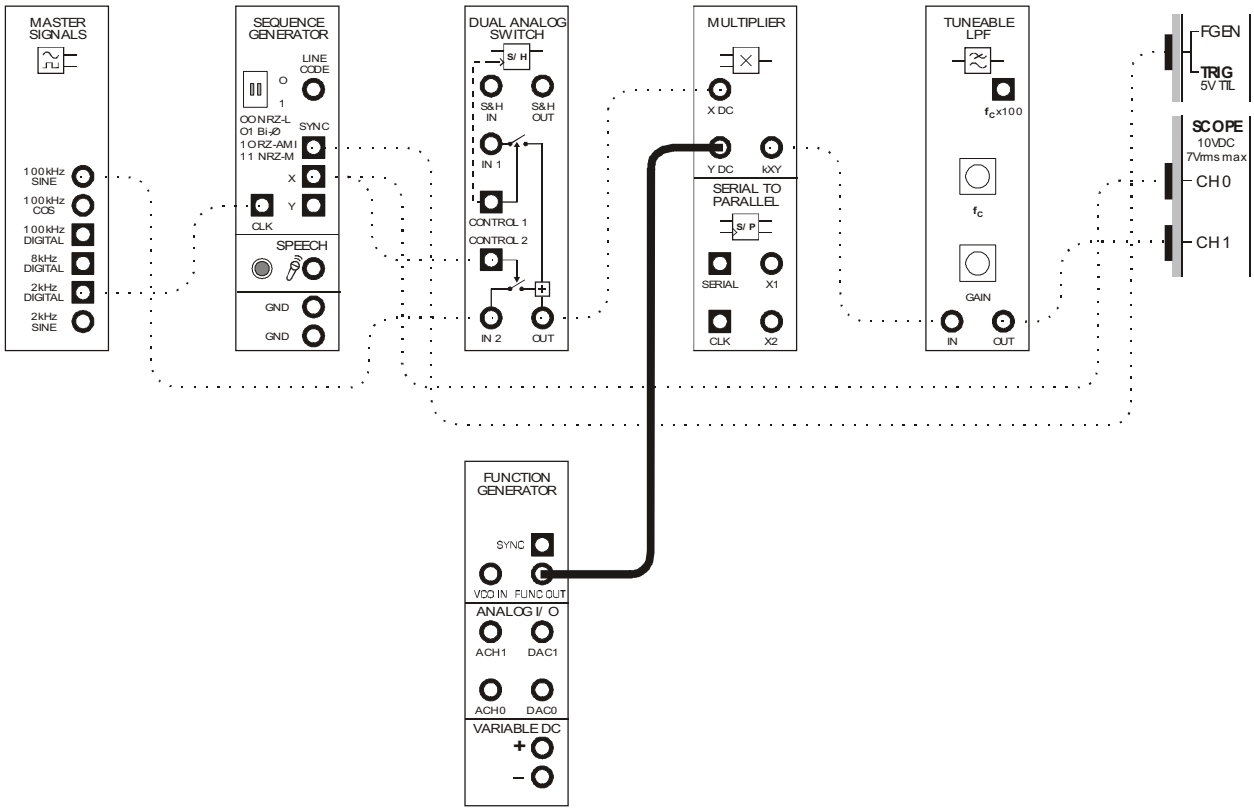

Figure 8

This change to the set-up can be represented by the block diagram in Figure 9 below.

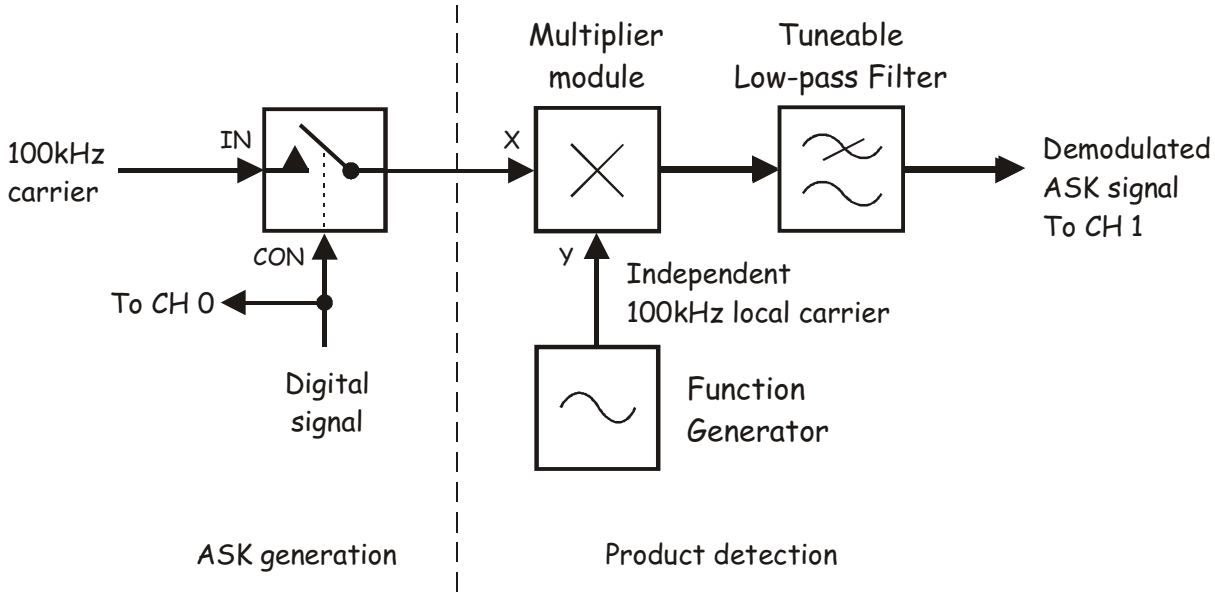

Figure 9

29. Compare the original and recovered digital data signals.

Question 7
Why doesn't the product detector recover a stable copy of the original message when the function generator is set to the correct frequency?

30. Experiment with changing the function generator's frequency by plus or minus one or two Hertz to see if you can obtain a stable copy of the original message.

Question 8
Why doesn't "fine-tuning" the function generator's output frequency allow the product detector to recover a stable copy of the original message?



Ask the instructor to check your work before continuing.

© 2008 Emona Instruments

31. Change the function generator's frequency to 99.8kHz then 100.2kHz and observe the effect on the recovered message.

32. Change the function generator's frequency to 98kHz then 102kHz and observe the effect on the recovered message.

Question 9
What does the recovered message now look like? **Tip:** If you're not sure, temporarily disable CH 0 so you can see the recovered message on its own.

Question 10
Why is the recovered signal's "carrier" 2kHz? **Tip:** If you're not sure, think about the math involved in product detection.

Question 11
Why is there nothing out of the product detector during the time that the original digital data is logic-0?



Ask the instructor to check your work before finishing.

Name: _____

Class: _____

12 - FSK generation (using the switching method) and demodulation

Experiment 12 – FSK generation (using the switching method) and demodulation

Preliminary discussion

At its simplest, frequency shift keying (FSK) is the frequency modulation (FM) scheme with a digital data signal for the message instead of speech and/or music. As such, the advantage of FSK over ASK is the same as the advantage of FM over AM – noise immunity.

Recall that noise manifests itself as variations in the transmitted signal's amplitude. As AM/ASK demodulation is designed to respond to the signal's amplitude variations, the demodulation process also responds to the noise, adding it to the recovered message. For AM transmissions, the added noise is heard as hiss, crackles and pops. For ASK transmissions, the added noise can change the logic state of bits and corrupt the data.

FM/FSK resists this problem (though is not completely immune from it) because demodulation is designed to respond to the signal's frequency variations. That being the case, any variations in the signal's amplitude due to noise can be removed by a *limiter*.

Figure 1 below shows what an FSK signal looks like time-coincident with the digital data signal that has been used to generate it.

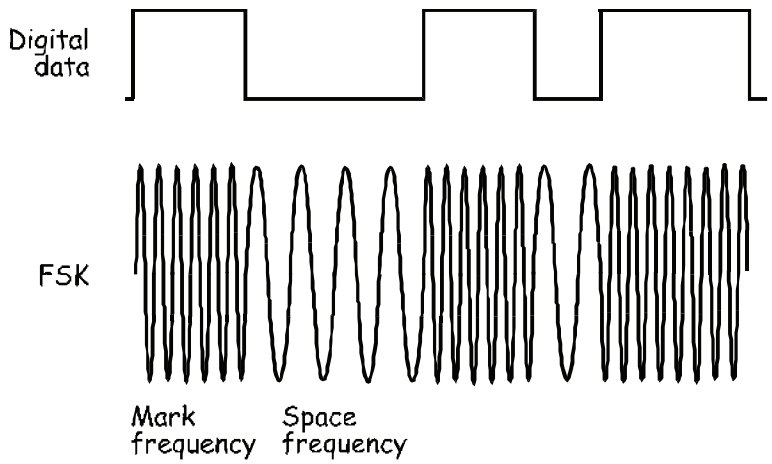

Figure 1

Notice that the FSK signal switches between two sinewaves. The sinewave that corresponds with logic-0s in the digital data is called the *space frequency*. The sinewave that corresponds with logic-1s in the digital data is called the *mark frequency*. In Figure 1, the mark frequency is higher than the space frequency but this is not a necessary requirement of FSK – the relative frequency can be reversed.

FSK generation can be handled by conventional FM modulator circuits including the *voltage-controlled oscillator* (VCO). In fact, the VCO is used for another Emona DATEx FSK generation experiment (see Experiment 18 Volume 1).

An alternative method is shown in Figure 2 below.

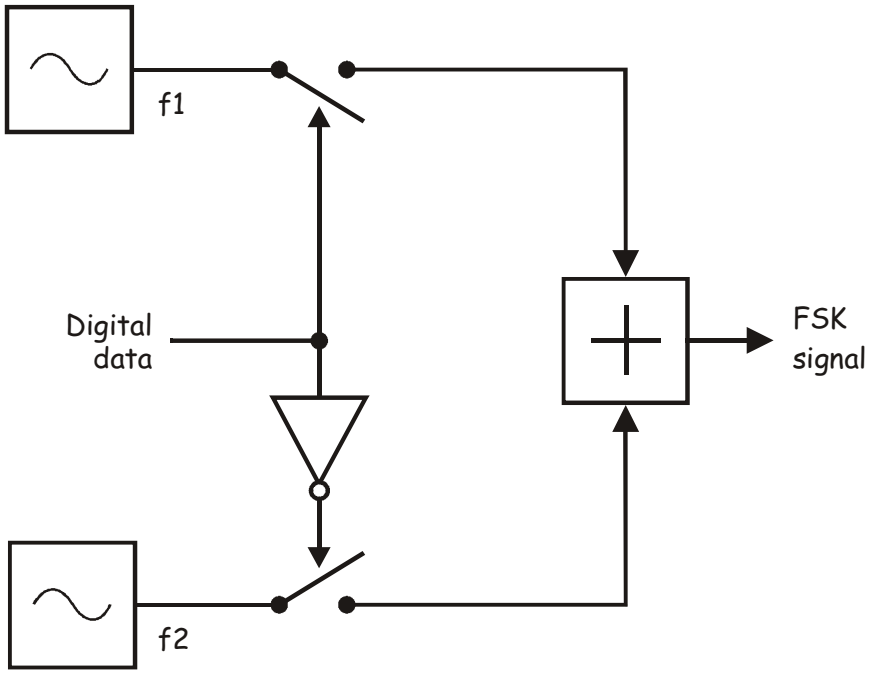

Figure 2

As you can see, this arrangement uses two oscillators, one for the FSK signal's mark frequency and the other its space frequency. The oscillators are connected to an Adder via electronic switches of some sort (there are many methods of implementing the switch so we'll not worry about exactly how this is achieved here). Importantly, one of the switches is controlled by the digital data directly while the other is controlled by an inverted copy of the data.

Now, suppose that the logic switches are active high and so are closed when their input is a logic-1. When the digital data is logic-1, the Adder's inputs are connected to f1 but not f2. Then, when the digital data signal is logic-0, the Adder's inputs are connected to f2 but not f1. That being the case, the Adder's output is one frequency for one of the digital data signal's logic states and a different frequency for the other. In other words, the Adder's output is an FSK signal that corresponds with the digital data.

 © 2008 Emona Instruments

FSK demodulation can be handled by conventional FM demodulators such as the *zero crossing detector* (refer to the preliminary discussion of Experiment 12 in Volume 1 for an explanation of this circuit's operation) and the *phase-locked loop*. Alternatively, if the FSK signal is passed through a sufficiently selective filter, the two sinewaves that make it up can be individually picked out. Considered on their own, each signal is an ASK signal and so the data can be recovered by passing either one of them through an envelope detector (refer to the preliminary discussion of Experiment 8 for an explanation of the envelope detector's operation).

The experiment

For this experiment you'll use the Emona DATEx to implement the switching method of generating an FSK signal. Digital data for the message is modelled by the Sequence Generator module. You'll then recover the data by using a filter to pick-out one of the sinewaves in the FSK signal and demodulate it using an envelope detector.

It should take you about 40 minutes to complete this experiment.

Pre-requisites:

Experiments 1, 2 & 3 (Vol. 1): Intros to the NI ELVIS II, the Emona DATEx and SFP control
Experiment 18 (Vol. 1): Frequency Shift Keying (optional)

Equipment

- Personal computer with appropriate software installed
- NI ELVIS II plus USB cable and power pack
- Emona DATEx experimental add-in module
- Three BNC to 2mm banana-plug leads
- Assorted 2mm banana-plug patch leads

Procedure

Part A – Setting up the switch control signals

To implement FSK using the switching method, a sample digital data signal and an inverted copy of it are needed. The next part of the experiment gets you to set these up.

1. Ensure that the NI ELVIS II power switch at the back of the unit is off.

2. Carefully plug the Emona DATEx experimental add-in module into the NI ELVIS II.

3. Set the *Control Mode* switch on the DATEx module (top right corner) to *PC Control*.

4. Connect the NI ELVIS II to the PC using the USB cable.

   Note: This may already have been done for you.

5. Turn on the NI ELVIS II power switch at the rear of the unit then turn on its *Prototyping Board Power* switch at the top right corner near the power indicator.

6. Turn on the PC and let it boot-up.

7. Launch the NI ELVISmx software.

8. Launch and run the NI ELVIS II Variable Power Supplies VI.

9. Set the Variable Power Supplies positive output voltage to 2V.

10. Connect the set-up shown in Figure 3 below.

    Note: Insert the black plugs of the oscilloscope leads into a ground (*GND*) socket.

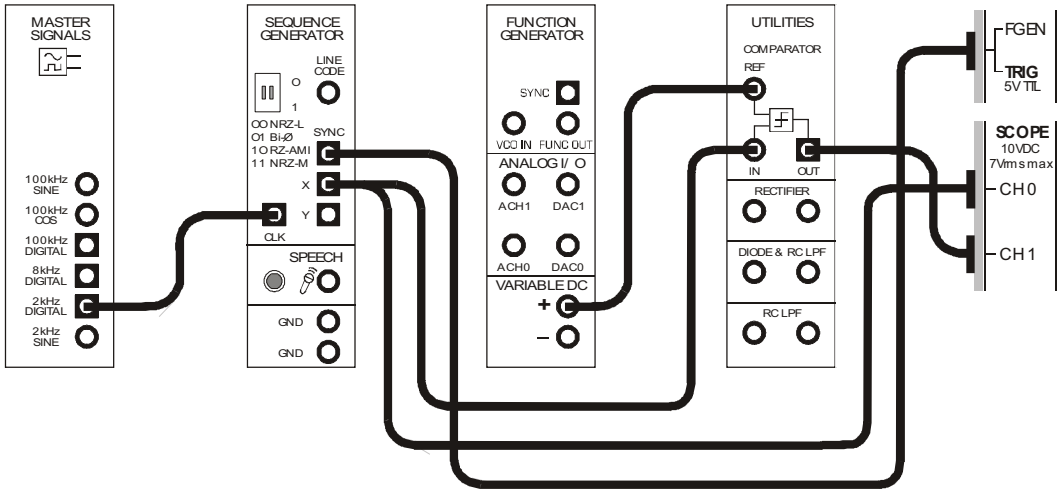

Figure 3

 © 2008 Emona Instruments

The set-up in Figure 3 can be represented by the block diagram in Figure 4 below. The Sequence Generator module is used to model a digital data signal and its SYNC output is used to trigger the scope to provide a stable display. The Comparator on the Utilities module, together with a DC voltage from the NI ELVIS II Variable Power Supplies, is used to invert the digital data signal.

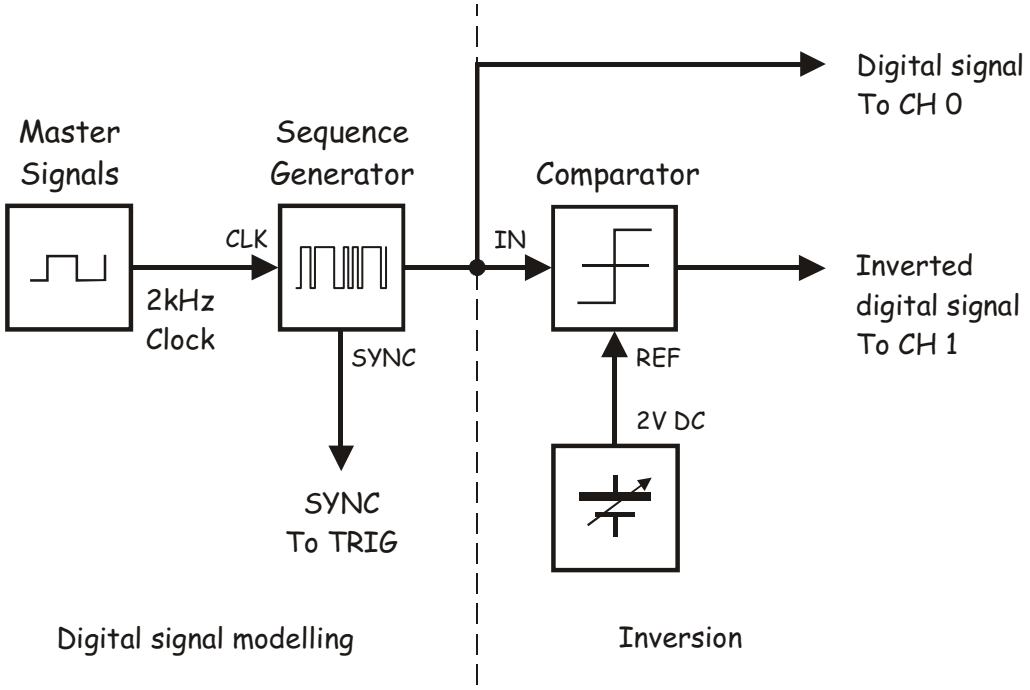

Figure 4

11. Launch and run the NI ELVIS II Oscilloscope VI.

12. Adjust the scope to view the digital data signal and its inverted copy. Essential scope settings include:

    - CH 1 *Vertical Position* to *-5V*
    - *Timebase* to *1ms/div*
    - *Trigger Type* to *Digital*

13. Compare the signals.

    Note: You should have a stable display of the digital data being modelled by the Sequence Generator module and an inverted copy of it on the Comparator's output.



Ask the instructor to check your work before continuing.

Part B – Implementing the switching method of FSK generation

Now that the required digital data signals have been set up, they can be used to control the electronic switches that are part of the switching method of generating FSK described in the preliminary discussion.

14. Launch and run the NI ELVIS II Function Generator VI.

15. Adjust the function generator using its soft controls for an output with the following specifications:

    - Waveshape: Sine
    - Frequency: 4kHz
    - Amplitude: 4Vpp
    - DC Offset: 0V
    - Modulation Type: None

16. Modify the set-up as shown in Figure 5 below.

    Note: Remember that the dotted lines show leads already in place.

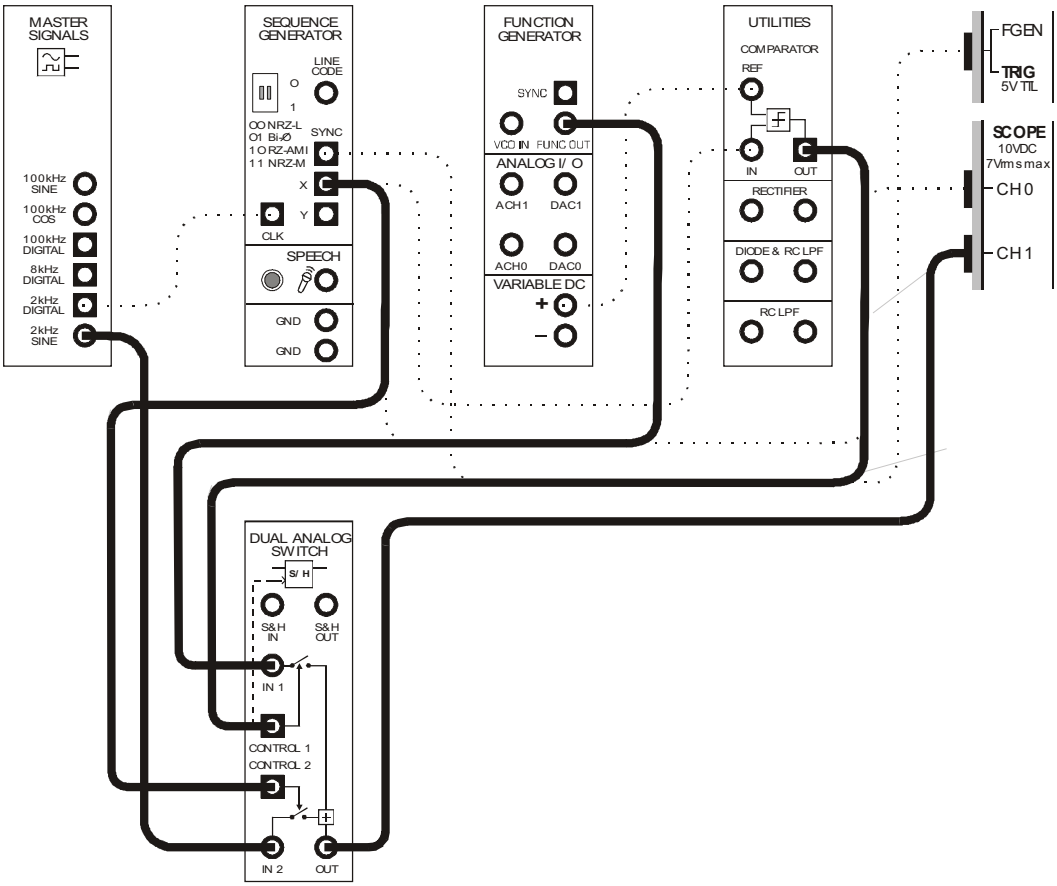

Figure 5

 © 2008 Emona Instruments

The set-up in Figure 5 can be represented by the block diagram in Figure 6 below. The Dual Analog Switch module implements the entire switching process necessary for FSK generation.

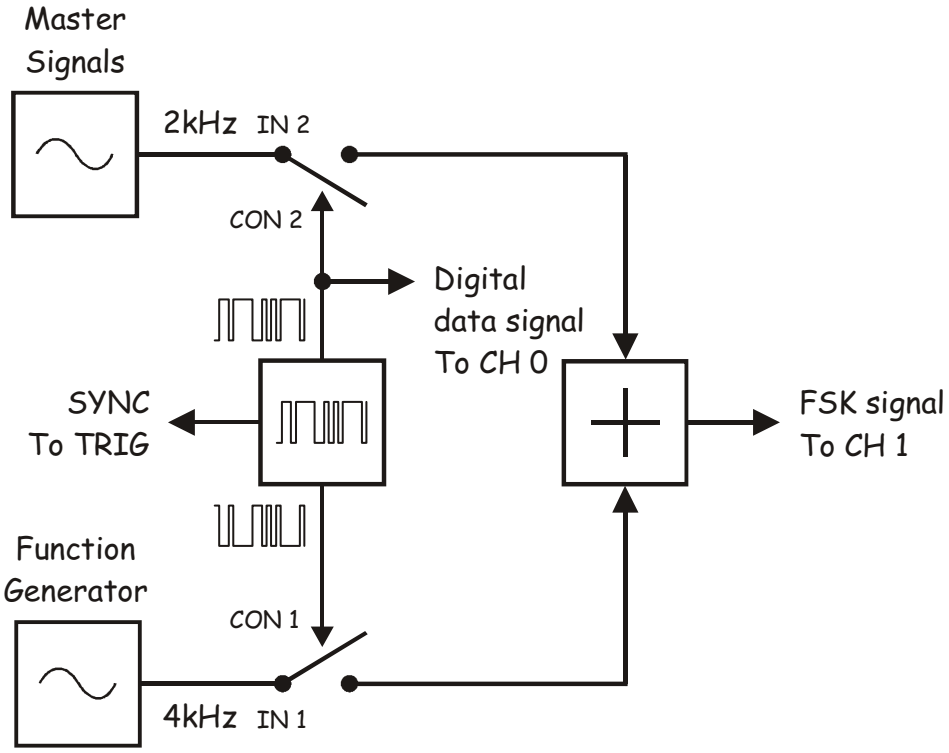

Figure 6

17. Compare the digital data signal with the FSK signal on the Dual Analog Switch module's output.

    Note: You'll probably need to return the scope's Channel 1 *Vertical Position* control back to 0V.

Question 1
What's the name for the Dual Analog Switch module's output frequency that corresponds with logic-1s in the digital data? **Tip:** If you're not sure, see the preliminary discussion.

Question 2
What's the name for the Dual Analog Switch module's output frequency that corresponds with logic-0s in the digital data?

Question 3
Based on your observations of the FSK signal, which of the two is the higher frequency? Explain your answer.



Ask the instructor to check your work before continuing.

Part C – A look at the spectral composition of FSK signals
When looking at the FSK signal in the time domain, it pretty clear that it's made up of just two sinewaves. Or is it? The next part of the experiment let's you investigate the FSK signal in the frequency domain by using the NI ELVIS II Dynamic Signal Analyzer.

18. Suspend the scope's operation by clicking on its *Stop* control once.

    Note: The scope's display should freeze and its hardware has been deactivated. This is a necessary step as the scope and signal analyzer share hardware resources and so they cannot be operated simultaneously.

19. Launch and run the NI ELVIS II Dynamic Signal Analyzer VI.

20. Adjust the signal analyzer's controls as follows:

    Input Settings

    - *Source Channel* to *SCOPE CH 1*
    - Voltage Range to ±10V

    FFT Settings

    - *Frequency Span* to *20,000*
    - *Resolution* to *400*
    - *Window* to *7 Term B-Harris*

    Averaging

    - *Mode* to *RMS*
    - *Weighting* to *Exponential*
    - *# of Averages* to *3*

    Trigger Settings

    - *Type* to *Digital*

    Frequency Display

    - *Units* to *dB*
    - *Mode* to *RMS*
    - *Scale* to *Auto*
    - *Cursors On* box unchecked (for now)

21. Activate the signal analyzer's cursors by checking (that is, ticking) *Cursors On* box.

    Note 1: When you do, green horizontal and vertical lines should appear on the signal analyzer's frequency domain display.

    Note 2: If you have used the signal analyzer's cursors before, jump to Step 26 on the next page.

The NI ELVIS II Dynamic Signal Analyzer has two cursors *C1* and *C2* that default to the left most side of the display when the signal analyzer's VI is launched. They're repositioned by "grabbing" their vertical lines with the mouse and moving the mouse left or right.

22. Use the mouse to grab and move the vertical line of cursor *C1*.

    Note: As you do, notice that cursor *C1* moves along the signal analyzer's trace and that the vertical and horizontal lines move so that they always intersect at *C1*.

23. Repeat Step 22 for cursor *C2*.

    Note: Fine control over the cursors' position is obtained by using the cursor's *Position* control in the *Cursor Settings area (below the display*).

The NI ELVIS II Dynamic Signal Analyzer includes a tool that measures the ***difference*** in magnitude and frequency between the two cursors. This information is displayed in green between the upper and lower parts of the display.

24. Move the cursors while watching the measurement readout to observe the effect.

25. Position the cursors so that they're on top of each other and note the measurement.

    Note: When you do, the measurement of difference in magnitude and frequency should both be zero.

Usefully, when one of the cursors is moved to the extreme left of the display, its position on the X-axis is zero. This means that the cursor is sitting on 0Hz. It also means that the measurement readout gives an absolute value of frequency for the other cursor. This makes sense when you think about it because the readout gives the difference in frequency between the two cursors but one of them is zero.

26. Move *C1* to the extreme left of the display.

27. Use *C2* to identify the 2kHz and 4kHz sinewaves in the FSK signal.

Question 4
Notice that there's a region between these sinewaves and on either side of them that is reasonably flat at about -20dB (or at about one tenth the voltage of the sinewaves). What is this telling you about the FSK signal?

Question 5
Notice also that there are "humps" in the spectrum at about 2kHz intervals starting at about 7kHz. What is this telling you about the FSK signal?



Ask the instructor to check your work before continuing.

Figure 1 in the preliminary discussion is somewhat misleading in that the transition between the space and mark frequencies occurs at the zero crossing point of the two sinewaves. However, this is not the case with the FSK signal that you have generated. Instead, there are sharp transitions (called *discontinuities*) between the two. These discontinuities contribute to making the spectrum of FSK much more complex than one might first expect.

Investigate the discontinuities in the FSK signal for yourself by following the next set of instructions.

28. Close the signal analyzer's VI.

29. Restart the scope's VI.

30. Set the scope's *Timebase* to *500µs/div*.

31. Compare your FSK signal with the FSK signal in Figure 1 paying particular attention to the transition points between the space and mark frequencies.

Question 6

Why are there sharp changes in voltage on the Adder module's output when the digital data changes state? **Tip:** Look at the FSK signal closely and think about what must be present on the oscillators' output at the crossover points.

Question 7

Removing the sharp change in voltage at the transition points between the space and mark frequencies would reduce the severity of these discontinuities which would in turn reduce the complexity and bandwidth of the FSK signal.

Can you think of a way of achieving this? **Tip:** The FSK signal's mark frequency already satisfies part of this solution.



Ask the instructor to check your work before continuing.

Part D – Demodulating an FSK signal using filtering and an envelope detector

As FSK is really just FM (with a digital message instead of speech and/or music), it can be recovered using any of the FM demodulation schemes. However, because the FSK signal switches back and forth between just two frequencies, we can use a method of demodulating it that cannot be used to demodulate speech-encoded FM signals. The next part of the experiment lets you do this.

32. Return the scope's *Timebase* to *1ms/div*.

33. Launch the DATEx soft front-panel (SFP) and check that you have soft control over the DATEx board.

34. Locate the Tuneable Low-pass Filter module on the DATEx SFP and turn its soft *Cut-off Frequency Adjust* control fully clockwise.

35. Turn the Tuneable Low-pass Filter module's soft *Gain* control fully clockwise.

36. Modify the set-up as shown in Figure 7 below.

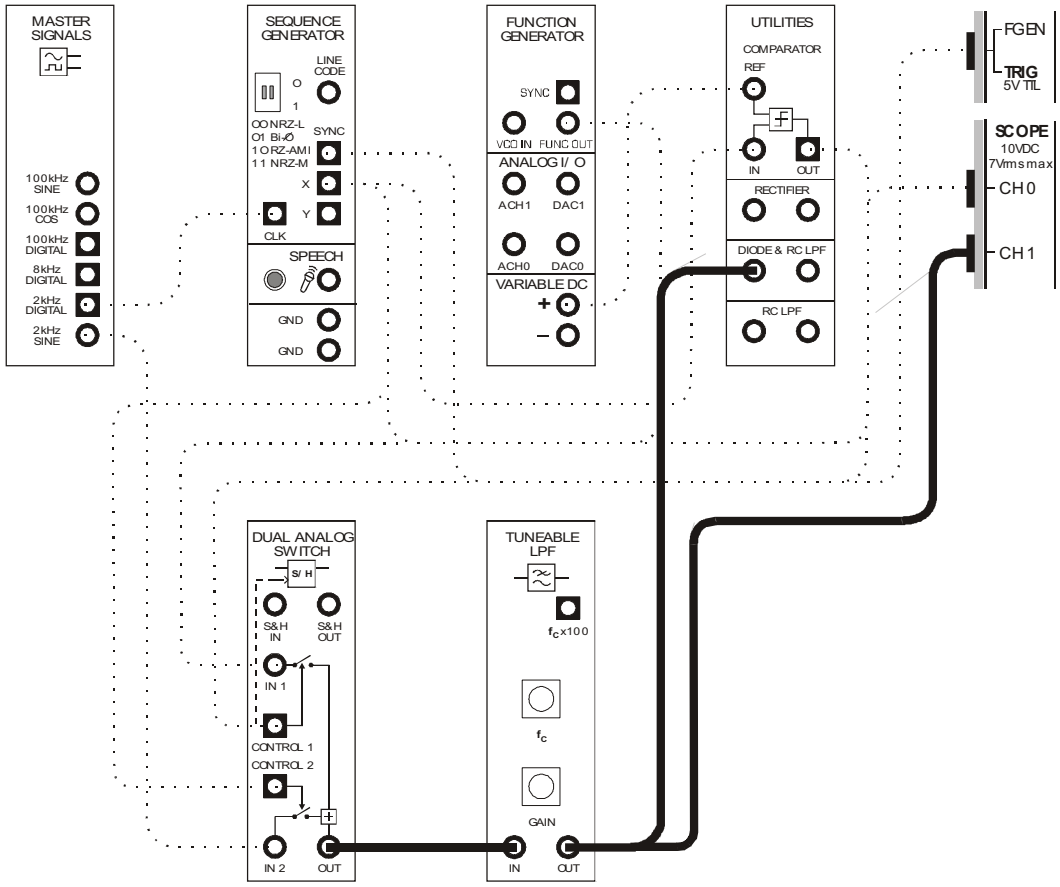

Figure 7

 © 2008 Emona Instruments

The additions to the set-up in Figure 7 that demodulate the FSK signal can be represented by the block diagram in Figure 8 below. The Tuneable Low-pass Filter module is used to pick out the lower frequency of the FSK signal's "two" sinewaves and the DIODE and RC LPF on the Utilities module form the envelope detector to complete the FSK signal's demodulation.

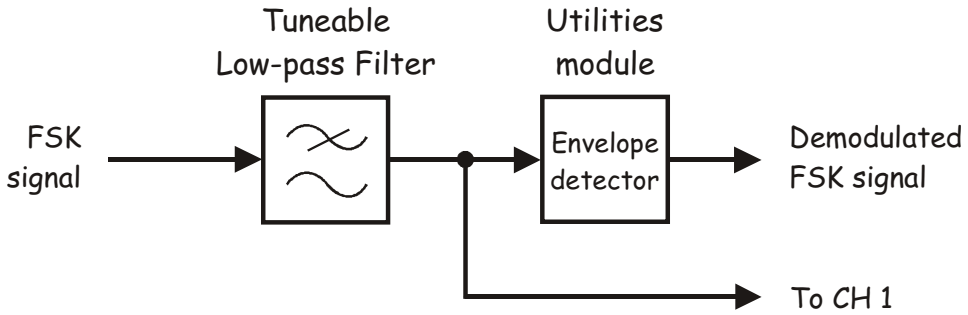

Figure 8

37. Slowly reduce the Tuneable Low-pass Filter module's cut-off frequency until the FSK signal's higher frequency component has been removed (or at least minimised) while keeping as much of the lower frequency component as possible.

38. Compare the digital data signal and the filter's output.

Question 8
Which of the FSK signal's two sinewaves is the filter letting through?

Question 9
What does the filtered FSK signal now look like?

Ask the instructor to check your work before continuing.

39. Change the scope's Channel 1 connection as shown in Figure 9 below.

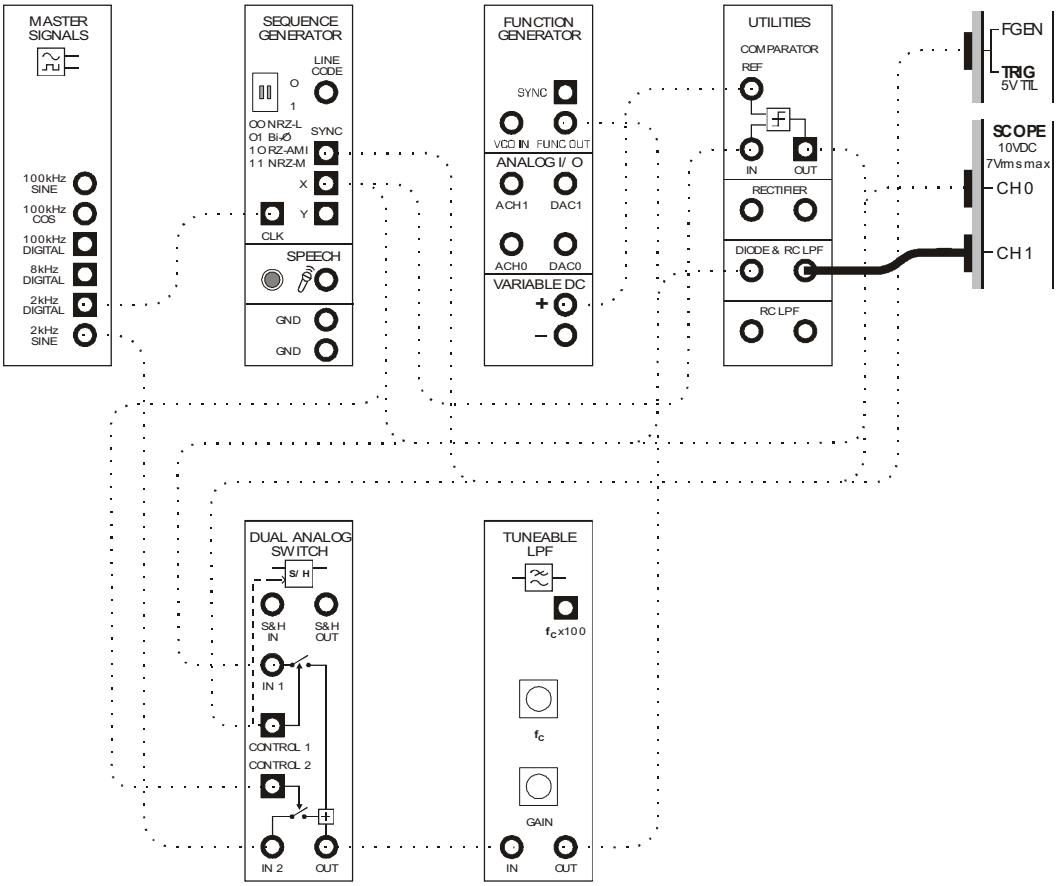

Figure 9

The change to the scope's Channel 1 connection can be represented by the block diagram in Figure 10 on the next page.

 © 2008 Emona Instruments

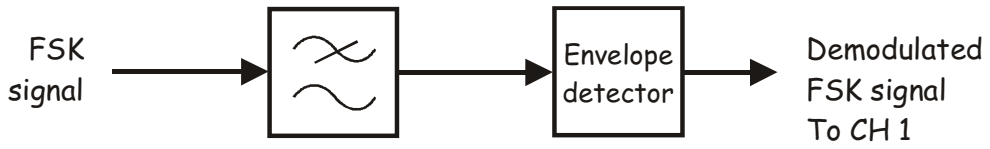

Figure 10

40. Compare the original digital data signal with the recovered digital data signal.

Question 10
The two signals are not a great likeness. Why is the recovered data signal so distorted?

Ask the instructor to check your work before finishing.

Name: _____

Class: _____

13 - Principles of Gaussian FSK (GFSK)

Experiment 13 – Principles of Gaussian FSK (GFSK)

Preliminary discussion

Figure 1 below shows an example of a possible FSK signal.

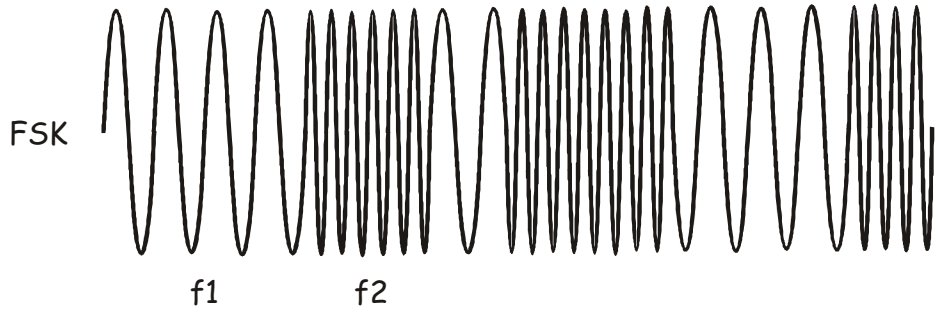

Figure 1

On the face of it, the FSK signal looks like it consists of just two sinewaves – f1 and f2. This also suggests that, in the frequency domain, the FSK signal looks like Figure 2a below. However, neither of these propositions are correct.

When the digital data changes state, the act of switching between f1 and f2 makes the FSK signal much more complex than simply consisting of just two sinewaves. Moreover, the FSK signal's bandwidth is much wider than the simple difference between f2 and f1. Predicting the spectral composition of an FSK signal is no small task and is not attempted here. However, a simplified version of an FSK signal's actual spectrum is shown in Figure 2b below.

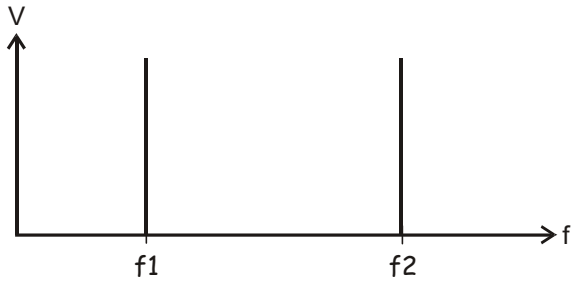

Figure 2a

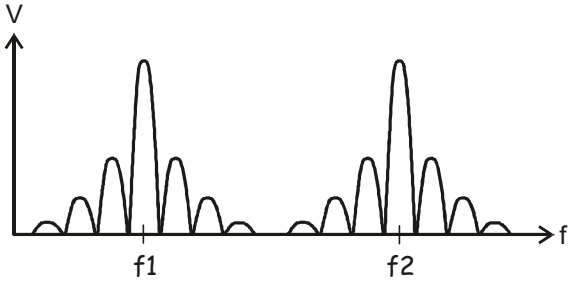

Figure 2b

An over-arching concern of probably all modulation schemes is the modulated signal's bandwidth. Applications are being developed every day that require access to the radio frequency spectrum but it's a finite resource. As such, it's important to keep the bandwidth of modulated signals to a minimum while maintaining the agreed quality of the communication link. Doing so allows for the maximum number of possible users.

© 2008 Emona Instruments

A variation of FSK that has been designed specifically to reduce the FSK signal's spectrum requirements is *Gaussian Frequency Shift Keying* (GFSK). GFSK is used with Bluetooth communications (among others) and is the same as FSK but with one exception – the digital data signal is passed through a Gaussian low-pass filter prior to modulation.

Gaussian filters are popular for pulse-shaping of pulse trains such as digital data signals because they eliminate overshoot while minimising the inevitable reduction of the signal's rise and fall times associated with low-pass filtering. This maintains the integrity of the pulse train's shape while minimising its spectral composition. In turn, this reduces the spectral composition of the GFSK signal that the Gaussian limited data signal is used to generate.

The experiment

For this experiment you'll use the Emona DATEx to generate FSK and a model of GFSK to compare the difference between the two signals in both the time and frequency domains. You'll then demodulate GFSK using an FSK demodulator and observe the effects on the demodulator's output.

It should take you about 40 minutes to complete this experiment.

Pre-requisites:

Experiments 1, 2 & 3 (Vol. 1): Intros to the NI ELVIS II, the Emona DATEx and SFP control
Experiment 18 (Vol. 1): Frequency Shift Keying

Equipment

- Personal computer with appropriate software installed
- NI ELVIS II plus USB cable and power pack
- Emona DATEx experimental add-in module
- Three BNC to 2mm banana-plug leads
- Assorted 2mm banana-plug patch leads

 © 2008 Emona Instruments

Procedure

Part A – Generating a conventional FSK signal and examining its spectral composition
To appreciate the bandwidth improvements of GFSK, it's useful to first consider the spectral composition of a conventional FSK signal. The next part of the experiment gets you to do this.

1. Ensure that the NI ELVIS II power switch at the back of the unit is off.

2. Carefully plug the Emona DATEx experimental add-in module into the NI ELVIS II.

3. Set the *Control Mode* switch on the DATEx module (top right corner) to *PC Control*.

4. Connect the NI ELVIS II to the PC using the USB cable.

   Note: This may already have been done for you.

5. Turn on the NI ELVIS II power switch at the rear of the unit then turn on its *Prototyping Board Power* switch at the top right corner near the power indicator.

6. Turn on the PC and let it boot-up.

7. Launch the NI ELVISmx software.

8. Launch and run the NI ELVIS II Function Generator VI.

9. Adjust the function generator using its soft controls for an output with the following specifications:

   - Waveshape: Sine
   - Frequency: 10kHz
   - Amplitude: 4Vpp
   - DC Offset: 0V
   - Modulation Type: FM

10. Connect the set-up shown in Figure 3 below.

Note: Insert the black plugs of the oscilloscope leads into a ground (*GND*) socket.

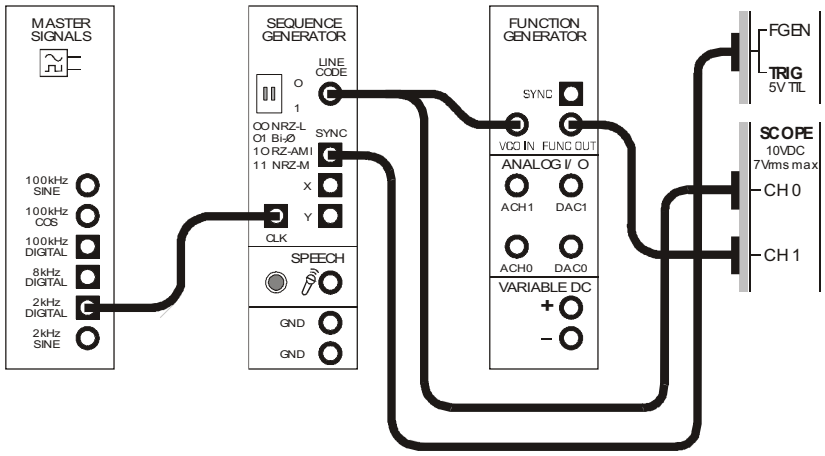

Figure 3

This set-up can be represented by the block diagram in Figure 4 below. The Sequence Generator module is used to model a digital signal and its SYNC output is used to trigger the scope to provide a stable display. The function generator's VCO facility is used to generate the FSK signal with a nominal carrier or rest frequency of 10kHz.

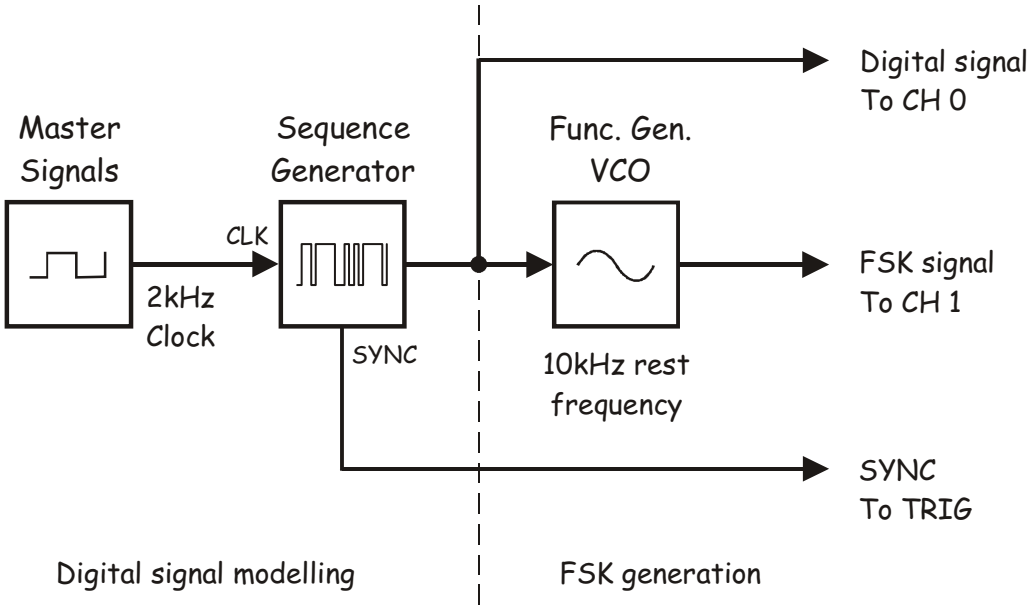

Figure 4

 © 2008 Emona Instruments

11. Launch the DATEx soft front-panel (SFP) and check that you have soft control over the DATEx board.

12. Locate the Sequence Generator module on the DATEx SFP and set its soft DIP-switches to 00.

13. Launch and run the NI ELVIS II Oscilloscope VI.

14. Adjust the scope to view the digital data signal and the FSK signal. Essential scope settings include:

    - *Timebase* to *500µs/div*
    - *Trigger Type* to *Digital*

15. Compare the signals.

    Note: You should have a stable display of the digital data being modelled by the Sequence Generator module and the FSK signal that it's being used to generate.

16. Use the scope to determine the FSK signal's mark frequency. Record the mark frequency in Table 1 below.

    Note: The mark frequency is already being measured by the scope and is being read-out in the scope measurement line for CH 1 at the bottom of its display.

17. Given the function generator's VCO is linear, use the VCO's rest and mark frequencies to calculate the FSK signal's space frequency. Record the space frequency in Table 1 also.

    Tip: The space frequency is a value below the rest frequency.

Table 1

FSK signal's space frequency	FSK signal's mark frequency



Ask the instructor to check your work before continuing.

© 2008 Emona Instruments

18. Suspend the scope's operation by clicking on its *Stop* control once.

    Note: The scope's display should freeze and its hardware has been deactivated. This is a necessary step as the scope and signal analyzer share hardware resources and so they cannot be operated simultaneously.

19. Launch and run the NI ELVIS II Dynamic Signal Analyzer VI.

20. Adjust the signal analyzer's controls as follows:

    Input Settings

    - *Source Channel* to *SCOPE CH 1*
    - Voltage Range to ±10V

    FFT Settings

    - *Frequency Span* to *20,000*
    - *Resolution* to *400*
    - *Window* to *7 Term B-Harris*

    Averaging

    - *Mode* to *RMS*
    - *Weighting* to *Exponential*
    - *# of Averages* to *3*

    Trigger Settings

    - *Type* to *Digital*

    Frequency Display

    - *Units* to *dB*
    - *Mode* to *RMS*
    - *Scale* to *Auto*
    - *Cursors On* box unchecked (for now)

21. Activate the signal analyzer's cursors by checking (that is, ticking) *Cursors On* box.

    Note 1: When you do, green horizontal and vertical lines should appear on the signal analyzer's frequency domain display.

    Note 2: If you have used the signal analyzer's cursors before, jump to Step 26 on the next page.

The NI ELVIS II Dynamic Signal Analyzer has two cursors *C1* and *C2* that default to the left most side of the display when the signal analyzer's VI is launched. They're repositioned by "grabbing" their vertical lines with the mouse and moving the mouse left or right.

22. Use the mouse to grab and move the vertical line of cursor *C1*.

    Note: As you do, notice that cursor *C1* moves along the signal analyzer's trace and that the vertical and horizontal lines move so that they always intersect at *C1*.

23. Repeat Step 22 for cursor *C2*.

    Note: Fine control over the cursors' position is obtained by using the cursor's *Position* control in the *Cursor Settings area (below the display)*.

The NI ELVIS II Dynamic Signal Analyzer includes a tool that measures the ***difference*** in magnitude and frequency between the two cursors. This information is displayed in green between the upper and lower parts of the display.

24. Move the cursors while watching the measurement readout to observe the effect.

25. Position the cursors so that they're on top of each other and note the measurement.

    Note: When you do, the measurement of difference in magnitude and frequency should both be zero.

Usefully, when one of the cursors is moved to the extreme left of the display, its position on the X-axis is zero. This means that the cursor is sitting on 0Hz. It also means that the measurement readout gives an absolute value of frequency for the other cursor. This makes sense when you think about it because the readout gives the difference in frequency between the two cursors but one of them is zero.

26. Move *C1* to the extreme left of the display.

27. Use *C2* to locate the sinewaves at the mark and space frequencies that you predicted for Steps 16 and 17.

Question 1
Notice that the FSK signal's spectrum more closely resembles Figure 2b than 2a in the preliminary discussion. What is this telling you about the FSK signal?



Ask the instructor to check your work before continuing.

© 2008 Emona Instruments

Determining the theoretical bandwidth of FM/FSK signals is no small task. Neither is it a simple matter to do so when viewing the signal in the frequency domain. To appreciate this point, follow the next couple of steps.

28. Set the signal analyzer's *Frequency Span* to *40kHz* and give the display a few seconds to update.

29. Repeat the step above for frequency spans of *60kHz* then *100kHz*.

To avoid the complex issue of determine the exact bandwidth of FM/FSK signals, we'll restrict ourselves to a qualitative spectrum comparison between FSK and GFSK.



Ask the instructor to check your work before continuing.

Part B – Generating a GFSK signal and comparing its spectral composition to that of FSK

Recall that GFSK is basically FSK generated using a band-limited digital data signal. True GFSK band-limits the digital data signal using a Gaussian low-pass filter. This type of filter is the optimal type of low-pass filter to use as it minimises the spectral composition of the digital data signal while maintaining the integrity of its shape. However, a Gaussian filter is not available on the Emona DATEx. That being the case, the next part of the experiment band-limits the digital data signal using the Baseband LPF on the Channel module. This is sufficient for our purposes here.

30. Return the signal analyzer's *Frequency Span* to *40kHz*.

31. Suspend the signal analyzer's VI.

    Note: Once the signal analyzer's VI has been suspended, the image on the display is frozen. Importantly, it's a frozen image of the conventional FSK signal's spectral composition.

32. Modify the set-up as shown in Figure 5 below.

Note: Remember that the dotted lines show leads already in place.

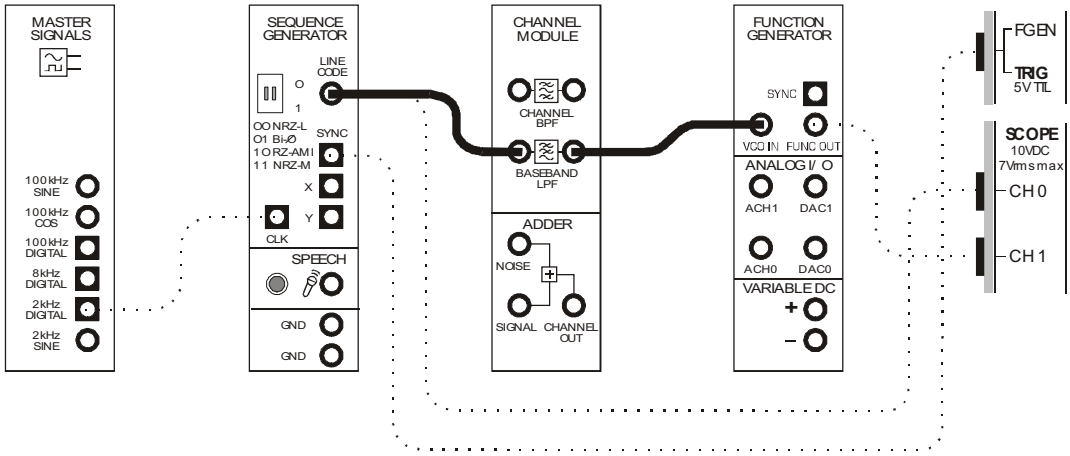

Figure 5

The modification to the set-up can be represented by the block diagram in Figure 6 below. Notice that the Channel module's Baseband LPF is used to band-limit the digital data signal to create a model of a GFSK signal.

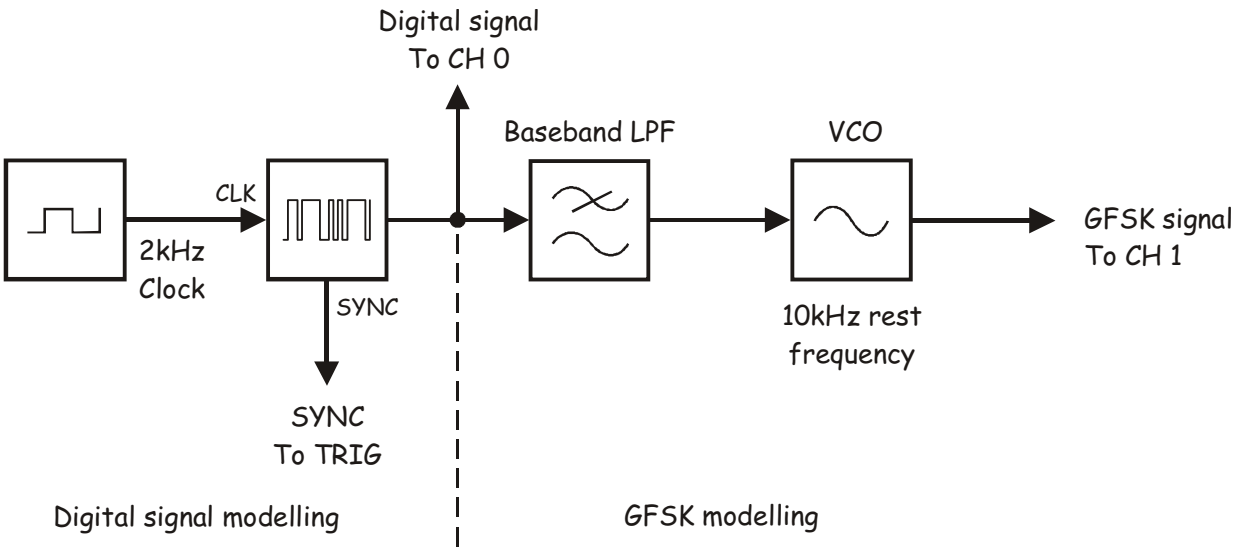

Figure 6

© 2008 Emona Instruments

33. Bring the scope's VI window to the front of PC's monitor **but don't** restart it yet.

    Note: The scope VI's display is frozen with the image of the FSK signal generated earlier.

34. Restart the scope's VI to view the GFSK signal and pay close attention to any change in the display that occurs.

    Question 2
    Is there a difference in the time domain between the FSK signal generated earlier and the GFSK signal presently being modelled?



Ask the instructor to check your work before continuing.

35. Suspend the scope VI's operation.

36. Bring the signal analyzer's VI window to the front of the PC's monitor **but don't** restart it yet.

    Note: Recall that the signal analyzer's display is frozen with the image of the FSK signal's spectrum.

37. Restart the signal analyzer's VI to view the GFSK signal in the frequency domain and pay close attention to any change in the display.

38. To see any change in spectrum between the two signals again, suspend the signal analyzer's VI, disconnect the patch lead on the Baseband LPF's output and connect it to its input (effectively removing the filter) then restart the signal analyzer's VI. Then repeat this procedure returning the patch lead to the Baseband LPF's output.

 © 2008 Emona Instruments

Question 3
Is there a difference in the frequency domain between the FSK signal generated earlier and the GFSK signal presently being modelled? If so, in what way?



Ask the instructor to check your work before continuing.

Part C – The effects of band-limiting the original digital data on the recovered digital data

GFSK doesn't appear to change the FSK signal significantly in the time domain but a sizeable chunk of the spectrum is removed. So, what is the impact of this, if any, on the output of an FSK demodulator? To discover the answer to this question, the next part of the experiment gets you to implement the FSK demodulator introduced in another DATEx experiment – the envelope detector with pre-filtering.

39. Close the signal analyzer's VI.

40. Restart the scope's VI.

41. Launch and run the NI ELVIS II Variable Power Supplies.

42. Set the Variable Power Supplies' positive output to 0V.

43. Locate the Tuneable Low-pass Filter module on the DATEx SFP and turn its soft *Cut-off Frequency Adjust* control fully clockwise.

44. Turn the Tuneable Low-pass Filter module's soft *Gain* control fully clockwise.

45. Modify the set-up as shown in Figure 7 below.

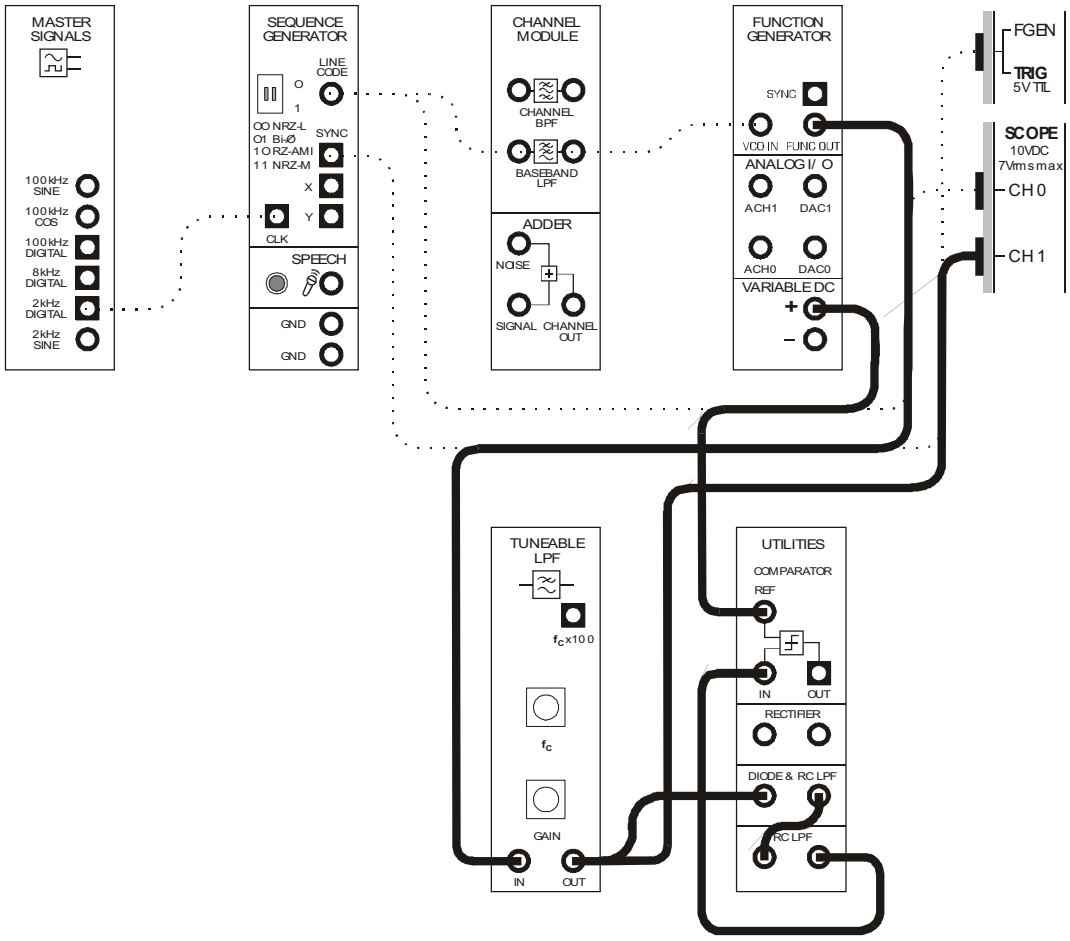

Figure 7

The FSK demodulator that you've just added to the set-up can be represented by the block diagram in Figure 8 on the next page. The Tuneable Low-pass Filter module is used to pick out the lower of the GFSK signal's "two" sinewaves effectively turning the signal into ASK. The DIODE & RC LPF together with the RC LPF on the Utilities module form an envelope detector to recover the original data. However, as FSK/GFSK modulation adds other sinewaves to the signal, these are demodulated along with the sinewaves that make up a copy of the original digital data signal. Consequently, the recovered digital data signal needs cleaning-up and a comparator is used for this purpose.

 © 2008 Emona Instruments

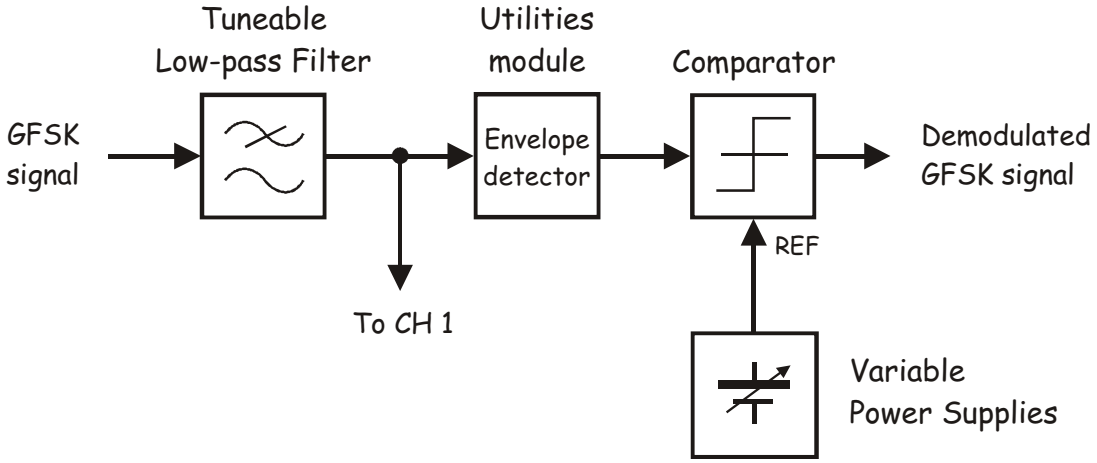

Figure 8

For this type of FSK/GFSK demodulation to work, the cut-off frequency of the low-pass filter at the front end of the arrangement must be adjusted to filter out the higher of the GFSK signal's "two" sinewaves. The next steps get you to do this before looking at the recovered data.

46. Slowly reduce the Tuneable Low-pass Filter module's cut-off frequency until the GFSK signal's higher frequency component has been removed while keeping as much of the lower frequency component as possible.

Question 4
Which of the GFSK signal's "two" sinewaves is the filter letting through?

Question 5
What does the filtered GFSK signal now look like?

Ask the instructor to check your work before continuing.

© 2008 Emona Instruments

47. Change the scope's Channel 1 connection to the set-up as shown in Figure 9 below.

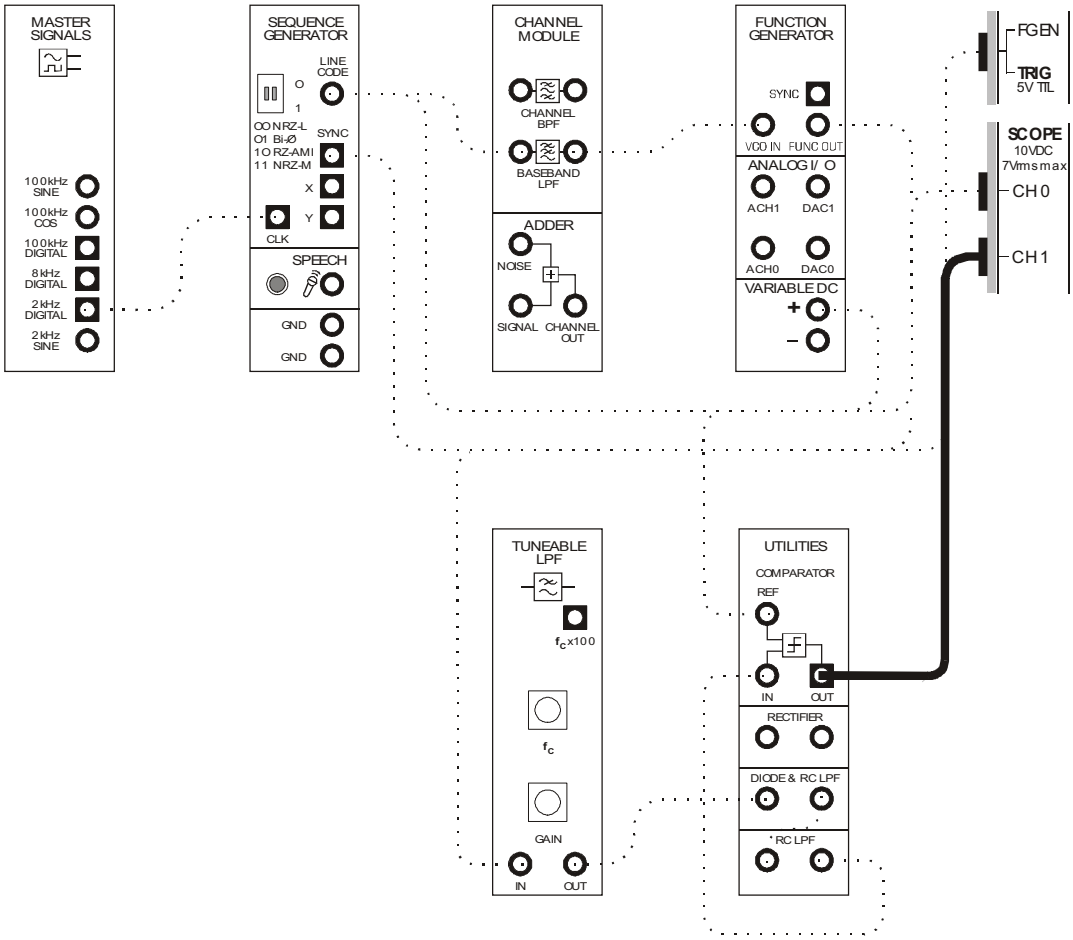

Figure 9

The change to the scope's Channel 1 connection can be represented by the block diagram in Figure 10 on the next page.

 © 2008 Emona Instruments

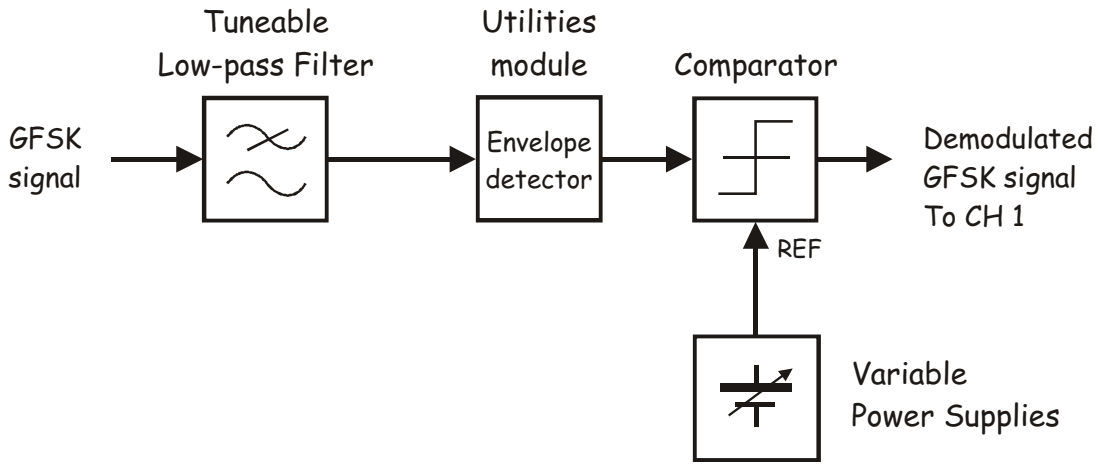

Figure 10

48. Set the scope's *Timebase* to *1ms/div*.

49. Compare the two digital data signals. If they're not the same, adjust the Variable Power Supplies positive output soft *Voltage* control until they are (ignoring any phase shift).

    Note: This will require fine adjustment of the reference voltage close to zero volts. You may also like to fine-tune the Tuneable Low-pass Filter module to obtain the most distinctive signal to convert to digital.

Question 6

How is it possible to remove a large part of an FSK signal's spectrum (to turn it into GFSK) yet still be able to recover the original digital data signal?

Ask the instructor to check your work before finishing.

© 2008 Emona Instruments

Name: _____

Class: _____

14 - PN sequence spectra and noise generation

Experiment 14 – PN sequence spectra and noise generation

Preliminary discussion

Pseudo-noise sequences (or just PN sequences) are very useful signals in communications and telecommunications, especially for implementing modulation schemes such as DSSS and CDMA (among others). They can also be used to generate noise for experimental purposes when modelling real world communications systems. But what exactly is a PN sequence?

To understand the answer to this question, you must return to the spectral composition of pulse trains. Recall that pulse trains are made up of a theoretically infinite number of sinewaves – the fundamental and its harmonics. Recall also that the frequency and amplitude of a pulse train's sinusoidal components affects its frequency and mark-space ratio (or duty cycle). Despite this, the spectral composition of all pulse trains follows the pattern of the (truncated) *Sinc Function* shown in Figure 1 below.

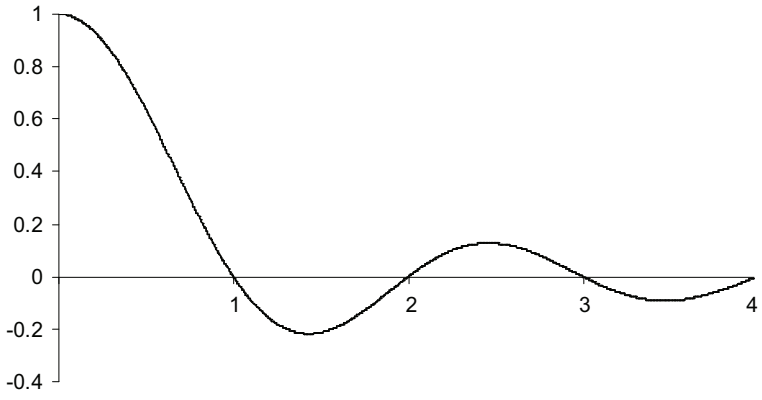

Figure 1

Figure 2 below illustrates this with an example of a 1kHz squarewave (a pulse train with a mark-space ratio of 1:1 or a duty cycle 50%). This is a spectrum that would be familiar to you.

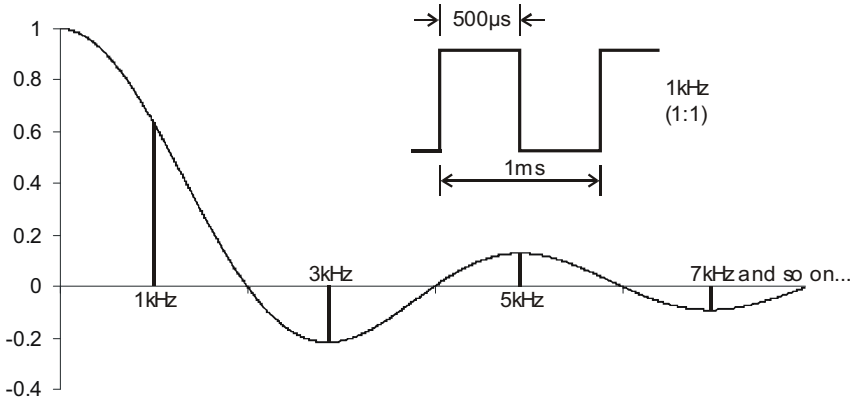

Figure 2

Figure 3 below shows the spectral composition of a 1kHz pulse train pulse having a mark-space ratio of 1:3 (or a duty cycle 25%). Notice that it too follows the pattern of the Sinc Function.

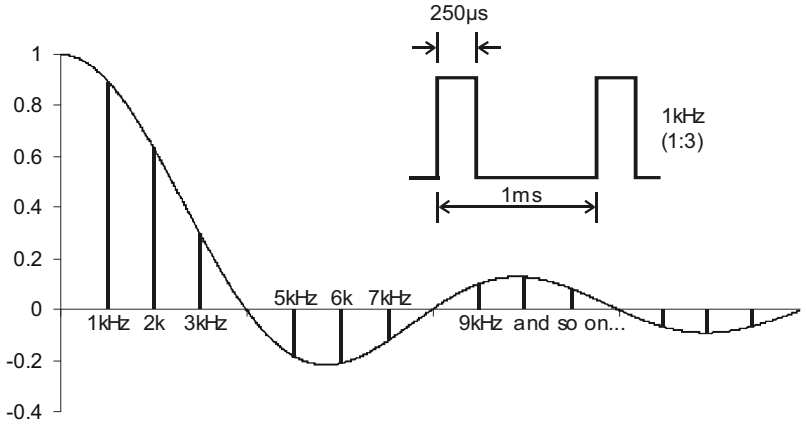

Figure 3

The examples in Figures 2 and 3 are instructive. Together, they show us that some harmonics of the pulse trains have an amplitude of zero (or are "nulled") and this is true of all pulse trains. Second, a comparison of Figures 2 and 3 shows us that, as the pulse train's mark-space ratio decreases, the number of significant harmonics that make it up increases. Or, put another way, as the mark-space ratio decreases, the number of harmonics that are present in each of the Sinc Function's lobes increases.

Now, suppose a sequence generator continuously outputs the sequential 4-bit binary number 1000 with each bit being 250µs wide (requiring a bit-clock of 4kHz). In the time domain, the resulting digital data signal is identical to the pulse train in Figure 3. This means that the sequence's spectral composition must be identical to the spectrum in Figure 3 also.

This fact has a couple of important implications. First, we can establish a general rule for determining the nulled harmonics in repeated sequential binary number sequences. They correspond with whole number multiples of the digital signal's bit-clock (that is, f_{bit}, $2f_{bit}$, $3f_{bit}$ and so on). In the case of our repeated sequential 4-bit binary number 1000 generated using a 4kHz bit-clock, the nulls occur at 4kHz, 8kHz, 12kHz and so on to infinity (theoretically).

Second, if the sequence generator's continuously repeated output is changed to the 5-bit binary number sequence 10000, the mark-space ratio of the resulting digital data signal decreases and so more harmonics are present between the nulls. Importantly though, if a 4kHz bit-clock is used to generate the 5-bit sequence, the nulls occur at the same frequencies as our example in Figure 3. So, with the nulls occurring at the same frequencies but with more harmonics between them, the spectral composition of the 5-bit sequence must be richer than that of its 4-bit counterpart. This gives us a second general rule. The greater the number of bits in a repeated sequence for a given bit-clock, the greater the sequence's spectral composition (though this doesn't apply to PN sequences with internally repeated sequences like 101010… and 11001100…).

Using the Sinc Function to analyse the spectral composition of several binary number sequences like 1000, 10000, 100000 and so on would quickly show that the number of harmonics in each lobe is the same number as the sequence's length (though the last one is nulled).

Finally, we can now return to the question of what is a pseudo-noise sequence. If the length of certain binary number sequences is long enough, their spectral composition becomes so dense that it can be used to model bandwidth limited white noise. That said, there would still be a repetitive element to the "noise signal" and so they're called pseudo (or "apparent") noise sequences.

The experiment

For this experiment you'll use the Emona DATEx to consider a 31-bit and 255-bit binary number sequence in the time domain. You'll then look at the data signals' spectra in the frequency domain to confirm their spectral composition. Finally, you'll use the sequences to generate electrical noise and compare their effectiveness.

It should take you about 50 minutes to complete this experiment.

Pre-requisites:

Experiments 1, 2 & 3 (Vol. 1): Intros to the NI ELVIS II, the Emona DATEx and SFP control

Equipment

- Personal computer with appropriate software installed
- NI ELVIS II plus USB cable and power pack
- Emona DATEx experimental add-in module
- Three BNC to 2mm banana-plug leads
- Assorted 2mm banana-plug patch leads

Procedure

Part A – Observations of PN sequences in the time domain

The next part of this experiment gets you to set up a 31-bit and a 255-bit binary number sequence and consider them in the time domain as preparation for looking at their spectra.

1. Ensure that the NI ELVIS II power switch at the back of the unit is off.

2. Carefully plug the Emona DATEx experimental add-in module into the NI ELVIS II.

3. Set the *Control Mode* switch on the DATEx module (top right corner) to *PC Control*.

4. Connect the NI ELVIS II to the PC using the USB cable.

   Note: This may already have been done for you.

5. Turn on the NI ELVIS II power switch at the rear of the unit then turn on its *Prototyping Board Power* switch at the top right corner near the power indicator.

6. Turn on the PC and let it boot-up.

7. Launch the NI ELVISmx software.

8. Connect the set-up shown in Figure 4 below.

   Note: Insert the black plugs of the oscilloscope leads into a ground (*GND*) socket.

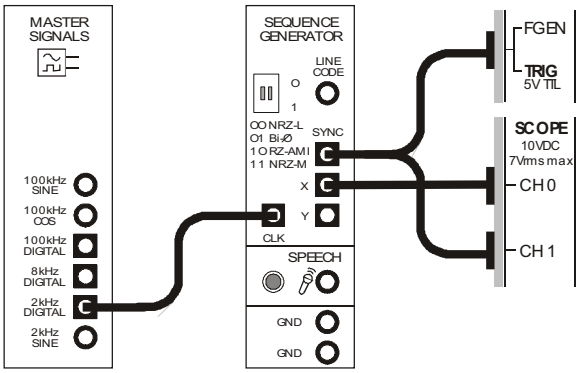

Figure 4

The set-up in Figure 4 can be represented by the block diagram in Figure 5 below. The Master Signals module's *2kHz DIGITAL* output is used to provide the Sequence Generator module's bit-clock. The Sequence Generator module's *X* output is a continuous 31-bit sequential binary number. The module's *SYNC* output is a pulse that corresponds with the sequence's first output bit on every repetition.

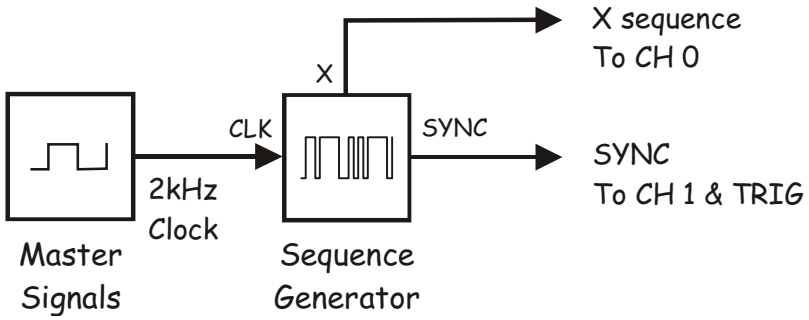

Figure 5

9. Launch and run the NI ELVIS II Oscilloscope VI.

10. Adjust the scope to view the Sequence Generator module's *X* output as a stable display. Essential scope settings include:

    - *Timebase* to *2ms/div*
    - *Trigger Type* to *Digital*
    - CH 1 *Vertical Position* to *-5V*

11. Activate the scope's Channel 1 input (by checking the Channel 1 *Enabled* box) to view both the Sequence Generator module's *X* and *SYNC* outputs.



Ask the instructor to check your work before continuing.

Question 1
Calculate the width of each bit in the Sequence Generator module's *X* sequence for the bit-clock used. **Note:** For accuracy here, you need to be aware that the Master Signals module's 2kHz outputs are actually 2.083kHz.

Question 2
Calculate the duration of the entire 31-bit sequence.

The next part of the experiment gets you to verify your answer to Question 2 using the scope's cursors.

12. Activate the scope's cursors by checking (that is, ticking) the scope's *Cursors On* box.

The NI ELVIS II Oscilloscope has two cursors (*C1* and *C2*) that default to the left most side of the display when the scope's VI is first launched. They're repositioned by "grabbing" their vertical lines with the mouse and moving the mouse left or right.

13. Use the mouse to grab and move the vertical line of cursor *C1*.

14. Repeat Step 13 for cursor *C2*.

The NI ELVIS II Oscilloscope cursors are actually measurement points. They measure the absolute instantaneous voltage of the signal on either Channel 0 or Channel 1 (the default is set to Channel 0 for both cursors). And, they measure the time difference between them. This information is displayed just below the signal display using brown text on the line labelled "Cursors:" and is highlighted in Figure 6 below.

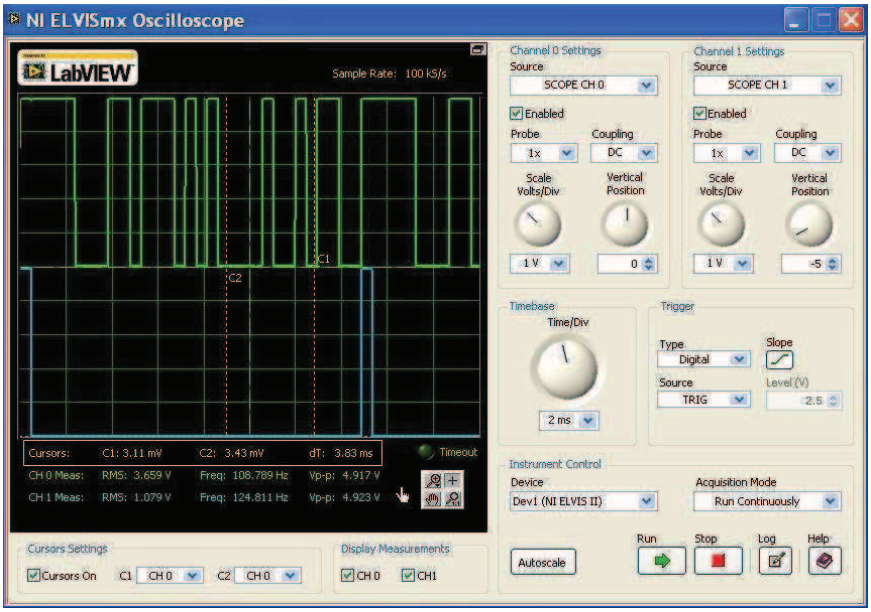

Figure 6

Notice that the absolute voltage of the CH 0 signal at *C1* in Figure 6 is 3.11mv and the absolute voltage of the CH 0 signal at *C2* is 3.43mV. Also notice that the time difference between the cursors is 3.83ms.

Now, to verify your answer to Question 2…

15. Move *C1* to the extreme left of the scope's display.

    Note: This aligns *C1* with the beginning of the sequence on the Sequence Generator module's *X* output.

16. Align *C2* with the next positive edge of the Sequence Generator module's *SYNC* signals.

    Note: This aligns *C2* with the beginning of the next sequence on the Sequence Generator module's *X* output.

17. Note the time difference between the cursors.

    Note: It should be the same as your answer to Question 2. If not, work out which one is wrong.

Ask the instructor to check your work before continuing.

18. Deactivate the scope's cursors.

19. Modify the set-up as shown in Figure 7 below.

Note: Remember that the dotted lines show leads already in place.

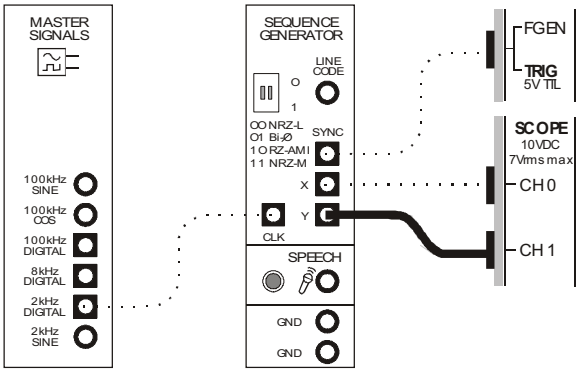

Figure 7

This set-up can be represented by the block diagram in Figure 8 below.

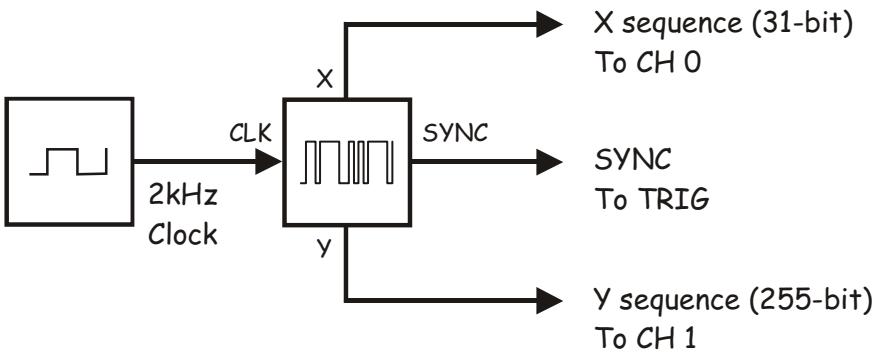

Figure 8

The scope will now be showing the Sequence Generator module's two sequences. However, you'll notice that the scope cannot trigger on the *Y* sequence. This is because the scope triggers on the first bit of the *X* sequence on every repetition using the Sequence Generator module's *SYNC* signal. As the *Y* sequence is 255 bits long, and as 255 ÷ 31 is not a whole number, every sweep of the scope's display starts at a different point in the *Y* sequence resulting in a different pattern for it on every sweep.



Ask the instructor to check your work before continuing.

Part B – Observations of PN sequences in the frequency domain

The next part of the experiment gets you to examine the spectral composition of the 31-bit and a 255-bit Sequence Generator module's *X* and *Y* outputs. But first, a little preparation is necessary.

Question 3

Calculate the frequency of the first four nulled harmonics in the Sequence Generator module's *X* sequence? **Tip:** If you're not sure how to calculate this, re-read the preliminary discussion.

Let's verify your answer using the NI ELVIS II Dynamic Signal Analyzer.

20. Suspend the scope's operation by clicking on its *Stop* control once.

    Note: The scope's display should freeze and its hardware has been deactivated. This is a necessary step as the scope and signal analyzer share hardware resources and so they cannot be operated simultaneously.

21. Minimise the scope's VI.

22. Launch and run the NI ELVIS II Dynamic Signal Analyzer VI.

Note: If the Dynamic Signal Analyzer VI has launched successfully, the instrument's window will be visible (see Figure 9).

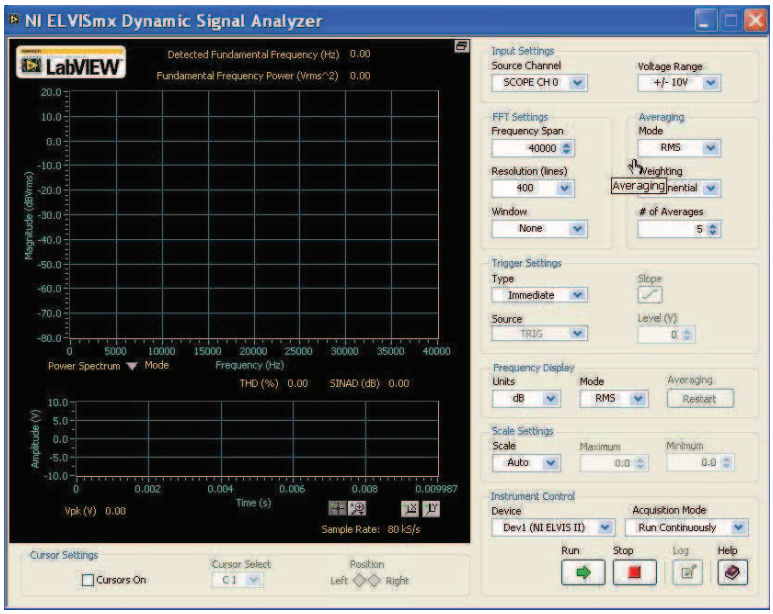

Figure 9

23. Adjust the signal analyzer's controls as follows:

Input Settings

- *Source Channel* to *SCOPE CH 0*
- Voltage Range to ±10V

FFT Settings

- *Frequency Span* to *40,000*
- *Resolution* to *400*
- *Window* to *7 Term B-Harris*

Averaging

- *Mode* to *RMS*
- *Weighting* to *Exponential*
- *# of Averages* to *3*

Trigger Settings

- *Type* to *Digital*

Frequency Display

- *Units* to *dB*
- *Mode* to *RMS*
- *Scale* to *Auto*
- *Cursors On* box unchecked (for now)

Once adjusted correctly, the signal analyzer's display should look like Figure 10 below.

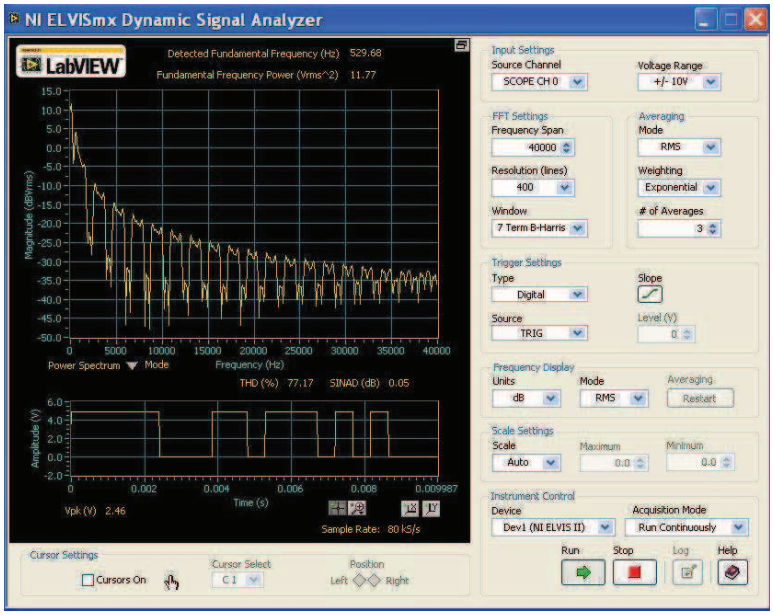

Figure 10

If you've not used the signal analyzer before, its display may need a little explaining here. There are actually two displays, a large one on top and a much smaller one underneath. The smaller one is a time domain representation of the input (in other words, the display is a scope).

The larger of the two displays is the frequency domain representation of the 31-bit sequence on the Sequence Generator module's *X* output. The humps or lobes represent groups of the sinewaves and, as you can see, they follow the general pattern of the Sinc Function.

Question 4

Why are there many more lobes in the *X* sequence's spectrum than suggested in Figures 1, 2 and 3 of the preliminary discussion?

If you have used the signal analzyer before and have also used its cursors, go directly to Step 31 on the next page.

24. Activate the signal analyzer's cursors by checking (that is, ticking) *Cursors On* box.

    Note: When you do, green horizontal and vertical lines should appear on the signal analyzer's frequency domain display.

The NI ELVIS II Dynamic Signal Analyzer has two cursors *C1* and *C2* that default to the left most side of the display when the signal analyzer's VI is launched. Like the scope's cursors, they're repositioned by "grabbing" their vertical lines with the mouse and moving the mouse left or right.

25. Use the mouse to grab and move the vertical line of cursor *C1*.

    Note: As you do, notice that cursor *C1* moves along the signal analyzer's trace and that the vertical and horizontal lines move so that they always intersect at *C1*.

26. Repeat Step 25 for cursor *C2*.

    Note: Fine control over the cursors' position is obtained by using the cursor's *Position* control in the *Cursor Settings area (below the display*).

The NI ELVIS II Dynamic Signal Analyzer includes a tool that measures the difference in magnitude and frequency between the two cursors. This information is displayed in green between the frequency and time domain displays.

27. Move the cursors while watching the measurement readout to observe the effect.

28. Position the cursors so that they're on top of each other and note the measurement.

    Note: When you do, the measurement of difference in magnitude and frequency should both be zero.

Usefully, when one of the cursors is moved to the extreme left of the display, its position on the X-axis is zero. This means that the cursor is sitting on 0Hz. It also means that the measurement readout gives an absolute value of frequency for the other cursor. This makes sense when you think about it because the readout gives the difference in frequency between the two cursors but one of them is zero.

29. Move *C2* to the extreme left of the display.

30. Move *C1* to any point on any of the spectrum's lobes.

    Note: The readout will now be showing you the frequency of a sinewave at that point in the lobe.

31. Use the signal analyzer's *C1* cursor to check that the frequencies you listed in your answer to Question 3 are indeed nulled as you predicted.



Ask the instructor to check your work before continuing.

Question 5
Theoretically, how many harmonics make up each lobe in the spectrum of the Sequence Generator module's *X* output?

Question 6
Why can't you see each of the harmonics individually?

32. To verify the answer to your questions, set the signal analyzer's *Frequency Span* to 2,500Hz.

    Note: Once the signal analyzer's display has updated, you should see a number of discrete sinewaves representing all of the harmonics in the signal's first lobe.

33. Use the signal analyzer's *C1* cursor to locate the null at 2.083kHz.

34. Count the number of significant harmonics in the signal's first lobe.

    Note: Your count should match your answer to Question 5. If not, investigate which one is wrong.



Ask the instructor to check your work before continuing.

Now let's consider a longer sequence. But first, a little more preparation.

Question 7
Calculate the frequency of the first four nulled harmonics in the Sequence Generator module's *Y* sequence?

35. Return the signal analyzer's *Frequency Span* to 40,00Hz.

36. Set the signal analyzer's *Source Channel* to *SCOPE CH 1*.

37. Use the signal analyzer's *C1* cursor to verify your answer to Question 7.

Question 8
Theoretically, how many harmonics make up each lobe in the spectrum of the Sequence Generator module's *Y* output?

38. See if you can verify your answer to Question 8 by setting the signal analyzer's *Frequency Span* to 2,500Hz to examine the spectral composition of the signal's first lobe.

© 2008 Emona Instruments

Question 9
Why can't you accurately count the harmonics in the signal's first lobe?

Question 10
Which of the Sequence Generator module's two sequences has the greater harmonic content?

39. As there are 255 harmonics in the each of the signal's lobes, they should be about 8.16Hz apart (2.083kHz ÷ 255). Reduce the signal analyzer's *Frequency Span* to see if you can measure this separation between them using the cursors.

    Note: You may need the instructor's help with adjusting some of the signal analyzer's other controls.



Ask the instructor to check your work before continuing.

Part C – Using PN sequences to generate noise

Generating the theoretical proposition of white noise is impossible. To explain, an infinite number of sinewaves (with or without equal power density) would require an infinite amount of power! However, as you have just seen, long PN sequences are rich in harmonics. Moreover, although the spectrum of PN sequences have lobes of changing amplitude, small portions of its spectrum are relatively flat (a point you may have noticed at Step 38). That being the case, it's possible to isolate a small portion of a PN sequence's spectrum using a filter to model band-limited white noise. The next part of this experiment demonstrates this.

40. Suspend the signal analyzer's VI.

41. Completely dismantle the current set-up.

42. Launch and run the NI ELVIS II Function Generator VI.

43. Adjust the function generator for a 150kHz output.

    Note: It's not necessary to adjust any other controls as the function generator's *SYNC* output will be used and this is a digital signal.

44. Connect the set-up shown in Figure 11 below.

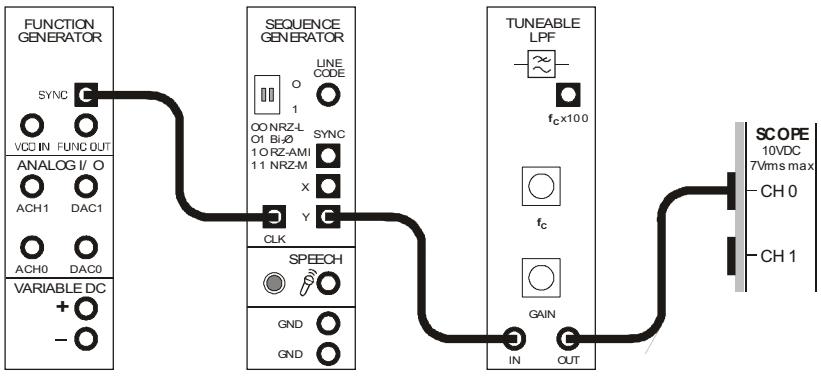

Figure 11

The set-up in Figure 11 can be represented by the block diagram in Figure 12 below. A quick mathematical analysis tells us that, with a 150kHz bit-clock, the spectral composition of the Sequence Generator module's *Y* output includes 255 sinewaves per lobe and so they are separated by 588Hz.

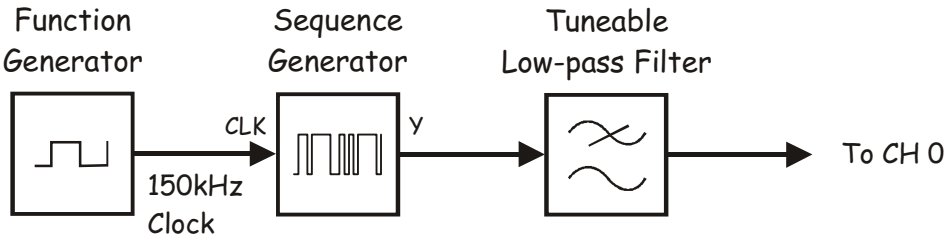

Figure 12

45. Launch the DATEx soft front-panel (SFP) and check that you have soft control over the DATEx board.

46. Locate the Tuneable Low-pass Filter module on the DATEx SFP and set its soft *Gain* to about the middle of its travel.

47. Turn the Tuneable Low-pass Filter module's soft *Cut-off Frequency Adjust* control fully clockwise.

    Note: This sets the Tuneable Low-pass Filter module's cut-off frequency to 15kHz.

48. Restart the scope's VI.

49. Adjust the scope to view the Tuneable Low-pass Filter module's output. Essential scope settings include:

    - *Timebase* to *1ms/div*
    - *Trigger Type* to *Immediate*
    - CH 1 deactivated

50. Observe the signal.

Question 11
What does the signal on the Tuneable Low-pass Filter module's output look like?



Ask the instructor to check your work before continuing.

The signal on the Tuneable Low-pass Filter module's output isn't "white" noise because it is bandwidth limited. Nor is the signal truly "noise". This can be demonstrated using the scope. True noise is non-repetitive. However, the signal on the Tuneable Low-pass Filter module's output repeats itself every 1.7ms. [This figure is calculated using the bit-clock's period (1÷150,000Hz) and multiplying it by the PN sequence's number of bits (255).] The repetitive nature of the "noise" you have modelled can be observed using the scope.

51. Suspend the scope's VI to stop the signal from jumping around on the screen.

52. Look closely at the signal - You should see it repeat itself about 5 times.

53. Activate the scope's cursors and use them to measure the signal's period.

    Note: You should find it is close to the figure quoted above.

Question 12
Given the signal on the Tuneable Low-pass Filter module's output is repetitive, what's a better name for it than "noise"?



Ask the instructor to check your work before continuing.

Question 13
How many sinewaves fall inside the Tuneable Low-pass filter's 15kHz pass-band?

---

54. Restart the signal analyzer's VI and make the following adjustments:

    - *Source Channel* to *SCOPE CH 0*
    - *Frequency Span* to *20,000Hz*
    - *Trigger Type* to *Immediate*

55. Use the signal analyzer's *C1* cursor to indicate on the screen the Tuneable Low-pass Filter's cut-off frequency.

56. Count the number of significant harmonics between 0Hz and the filter's cut-off frequency.

    Note: Your count should match your answer to 13. If not, work out which one is wrong.

57. Suspend the signal analyzer's VI.

58. Restart the scope's VI.

59. Modify the set-up as shown in Figure 13 below.

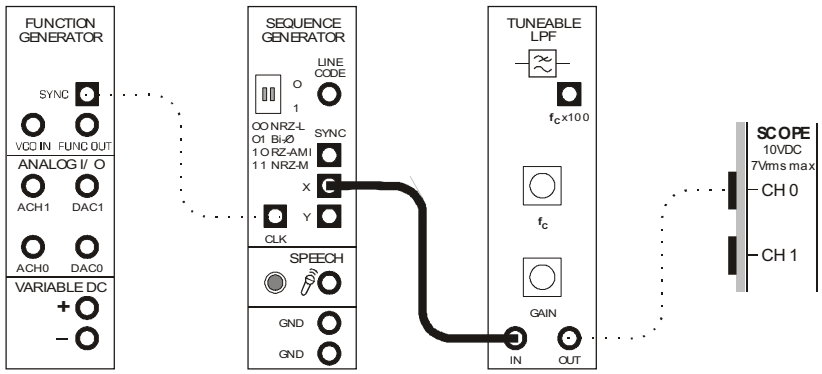

Figure 13

60. Observe the Tuneable Low-pass filter module's new output signal.

Question 14
Why doesn't the signal look like electrical noise any more?

61. To verify your answer to Question 14, suspend the scope's VI.

62. Restart the signal analyzer's VI.

63. Count the number of significant harmonics between 0Hz and the filter's cut-off frequency.



Ask the instructor to check your work before finishing.

© 2008 Emona Instruments

Why are the DATEx Sequence Generator module's outputs 31 and 255 bits long?
You may be wondering why the length of the sequences for the DATEx Sequence Generator module's outputs are 31 and 255 bits long. To explain, shift register circuits known as *linear feedback shift registers* have been used to generate them. These circuits are similar to ring counters in that they recycle data through the shift register. However, they also include feedback via exclusive OR gates at key points to change the data word as it cycles through. That said, this doesn't generate purely random numbers as the data pattern must repeat. However, certain feedback connections create particularly long sequences and these are known as *maximal length sequences* (MLS).

Maximal length sequences have several interesting properties:

i) They have almost equal 1s and 0s…(actually 1 less 0 than 1s)

ii) They have equal number of "runs" of 1s and 0s (you can readily see this using the Sequence Generator module's 31-bit sequence

iii) They create a spectrum with no missing harmonics

iv) They never repeat within themselves (unlike the sequences mentioned at bottom of page 14-3)

These properties make maximal length sequences ideal for PN sequences used for applications like encryption, encoding etc. Naturally then, linear feedback shift registers generating maximal length sequences are used for the Emona DATEx Sequence Generator module.

For the *X* output, a 5-bit shift register is used making it 31 bits long (that is, 2^5-1) and for the *Y* output an 8-bit bit shifter register is used giving 255 bits (that is, 2^8-1).

Name: _____

Class: _____

15 - Line coding and bit-clock regeneration

Experiment 15 – Line coding and bit-clock regeneration

Preliminary discussion

Line coding

As you know, logic-0 and logic-1 in digital systems are represented by assigned voltages. For example, the TTL logic-0 is represented by 0V and the TTL logic-1 is represented by 5V (or by acceptable voltages relatively close to 0V and 5V). As you also know, the logic levels for other logic families like CMOS, ECL, etc are not necessarily 0V and 5V. This tells us that logic levels can be represented by any pair of voltages we like. That said, the choice of which voltages to use is not as arbitrary as that may seem. It's usually an engineering decision made to confer an advantage.

Importantly, this is also true for the choice of voltages used when sending digital signals over transmission lines like telephone lines. Standard TTL and CMOS voltages are less than ideal for this purpose. Moreover, even the basic premise of holding the voltage at a particular value for the entire duration of the logic state's value can be disadvantageous. For these reasons, digital signals within systems are often conditioned for transmission line communications and this is called *line coding*.

There are quite a few line codes. Four of them are:

- Non-return to zero – level (bipolar) (NRZ-L)
  As you can see from Figure 1 on the next page, this code is a simple scale and level shift of the original digital signal.

- Bi-phase – level (BiΦ-L also known as Manchester code)
  Figure 1 shows that this code changes state from +V to –V in the middle of the bit period for all logic-1s and changes from –V to +V in the middle of the bit period for all logic-0s. For consecutive bits with the same logic level, the voltage must invert after half a bit length in order to satisfy this rule for the next bit.

- Return to zero – alternate mark inversion (RZ-AMI)
  Figure 1 shows that this code uses 0V to represent logic-0 and a half-bit pulse to represent logic-1. Importantly, the polarity of the pulses alternates for every successive logic-1 (even if they're not consecutive bits).

- Non-return to zero – mark (bipolar) (NRZ-M)
  Figure 1 shows that this code changes state for each new logic-1 and doesn't change state for any logic-0s.

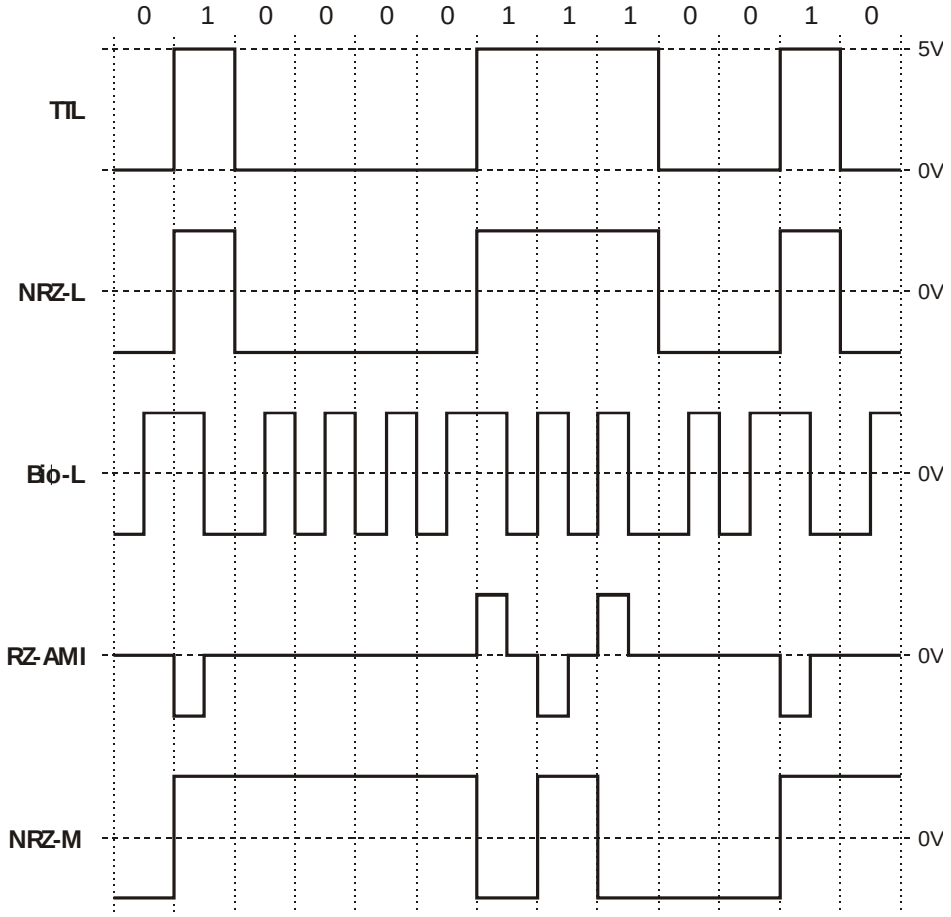

Figure 1

Table 1 below compares the minimum bandwidth requirements for propagating these signals along transmission lines. It also shows the line code's usefulness for bit-clock regeneration.

Table 1

Line code	Minimum bandwidth	Bit-clock regeneration
NRZ-L	$\frac{f_b}{2}$	Poor
BiΦ-L	f_b	Very good
RZ-AMI	$\frac{f_b}{2}$	Good
NRZ-M	$\frac{f_b}{2}$	Poor

As you can see, RZ-AMI offers the best compromise of the four between bandwidth and bit-clock regeneration (as well as other line code characteristics not mentioned here) and so it is widely used.

Bit-clock regeneration

In digital communications, once the transmitted signal has been demodulated by the receiver and the digital data signal cleaned up, the data bits are read. Whatever the circuit or device that does the reading, it must have a bit-clock that is synchronised to the bit-clock of the original digital data. If not, some bits are read more than once and/or other bits are not read at all. Both result in data errors.

When implementing other DATEx digital experiments, bit-clock synchronisation is achieved by simply stealing the bit-clock using a patch lead. This is obviously not possible in practice for wireless communications and is impractical for transmission line communications because an additional line is needed. As such, a method of remotely synchronising the two bit-clocks is necessary. This is the aim of *bit-clock regeneration* (BCR).

There are many ways of implementing bit-clock regeneration. To understand open-loop methods of BCR, you have to understand that the spectral composition of the digital data signal consists of a fundamental and harmonics that are sub-multiples and multiples of the original data's bit-clock (this issue is examined in Experiment 14). Usefully, the spectral composition of line codes such as Bi-phase – level (BiΦ-L or Manchester code) consist of a significant harmonic at the original bit-clock. In which case, this harmonic can be recovered using an appropriately selective band-pass filter.

Others line codes (like the other three mentioned on page 15-2) don't have a significant harmonic at the bit-clock frequency. However, their spectral composition is such that, if the digital data signal is mathematically squared, a significant sinewave at the original digital data signal's bit-clock is generated. Again, this signal can be recovered using an appropriately selective band-pass filter.

Once the sinewave at the bit-clock frequency has been filtered, it is sent to a comparator to convert it into a digital signal and is then ready to be used as the local bit-clock (notwithstanding other bit-clock regeneration issues such as *jitter*).

The experiment

For this experiment you'll examine the four DATEx line code equivalents of a standard TTL data signal in the time domain and compare them to their theoretically predicted waveshape. Next you'll examine the signals in the frequency domain to establish that one of them is different to the other three in terms of its spectral composition. Finally, you'll square the line codes to observe the effect on the component in them at the bit-clock frequency.

It should take you about 50 minutes to complete this experiment.

Pre-requisites:
Experiments 1, 2 & 3 (Vol. 1): Intros to the NI ELVIS II, the Emona DATEx and SFP control
Experiment 14 (Vol. 2): PN sequence spectrum and noise generation (desirable)

Equipment

- Personal computer with appropriate software installed
- NI ELVIS II plus USB cable and power pack
- Emona DATEx experimental add-in module
- Three BNC to 2mm banana-plug leads
- Assorted 2mm banana-plug patch leads

Procedure

Part A – Observations of line codes in the time domain
The next part of this experiment gets you observe the four Emona DATEx line code outputs in the time domain.

1. Ensure that the NI ELVIS II power switch at the back of the unit is off.

2. Carefully plug the Emona DATEx experimental add-in module into the NI ELVIS II.

3. Set the *Control Mode* switch on the DATEx module (top right corner) to *PC Control*.

4. Connect the NI ELVIS II to the PC using the USB cable.

   Note: This may already have been done for you.

5. Turn on the NI ELVIS II power switch at the rear of the unit then turn on its *Prototyping Board Power* switch at the top right corner near the power indicator.

6. Turn on the PC and let it boot-up.

7. Launch the NI ELVISmx software.

8. Launch the DATEx soft front-panel (SFP) and check that you have soft control over the DATEx board.

9. Locate the Sequence Generator module on the DATEx SFP and set its soft DIP-switches to 00.

   Note: This selects NRZ-L as the line code for the Sequence Generator module's *LINE CODE* output.

10. Connect the set-up shown in Figure 2 below.

Note: Insert the black plugs of the oscilloscope leads into a ground (*GND*) socket.

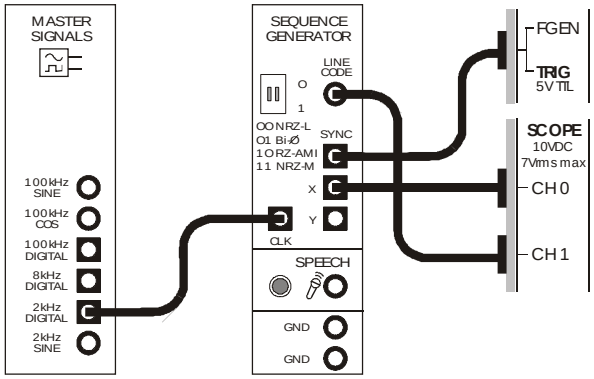

Figure 2

This set-up can be represented by the block diagram in Figure 3 below. The Master Signals module's *2kHz DIGITAL* output is used to provide the Sequence Generator module's bit-clock. The Sequence Generator module's *X* output is a continuous 31-bit sequential binary number. The Sequence Generator module's *LINE CODE* output is a copy of its *X* output using the line code scheme set by the DIP-switches. The module's *SYNC* output is a pulse that corresponds with the sequences' first output bit on every repetition and is used to trigger the scope.

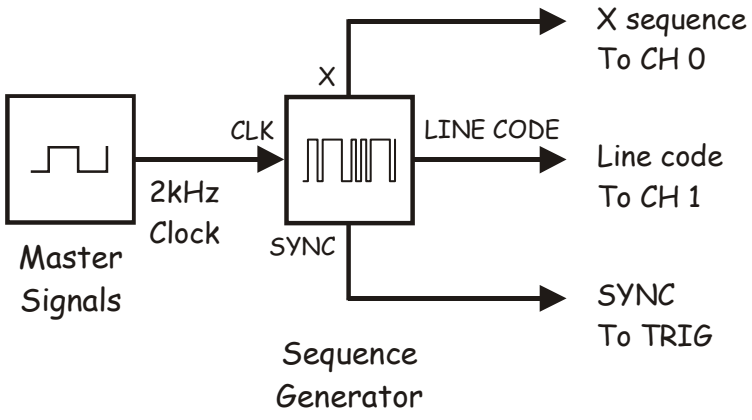

Figure 3

11. Launch and run the NI ELVIS II Oscilloscope VI.

12. Adjust the scope to view the Sequence Generator module's *X* output as a stable display. Essential scope settings include:

    - *Timebase* to *1ms/div*
    - *Trigger Type* to *Digital*

    Note: You'll now be viewing a portion of the *X* output's 31-bit sequence.

13. Activate the scope's Channel 1 input (by checking the Channel 1 *Enabled* box) to view both the Sequence Generator module's *X* and *LINE CODE* outputs.

    Note: The signals will be overlayed.

14. Set the scope's Channel 1 *Vertical Position* control to *-3V* to separate the signals and make them easier to compare.

    Note 1: Once done, the Channel 1 0V reference no-longer corresponds with the middle horizontal line on the graticule. However, the reference's new position is shown using a thin blue dashed line.

    Note 2: Notice that the Channel 1 0V reference runs through the middle of the line code signal. This means that one of signal's voltages is positive and the other negative.

15. Draw the two waveforms to scale and time-coincident with each other in the space provided on the next page.

    Note: Leave room for three more signals.

16. Select the BiΦ-L line code by setting the Sequence Generator module's soft DIP-switches to 01.

17. Draw the line code signal time-coincident with the other two.

18. Select the RZ-AMI line code by setting the Sequence Generator module's soft DIP-switches to 10 and draw the signal time-coincident with the others.

19. Select the NRZ-M line code by setting the Sequence Generator module's soft DIP-switches to 11 and draw the signal time-coincident with the others.



Ask the instructor to check your work before continuing.



Ask the instructor to check your work before continuing.

20. Compare each of the line code signals with the rules underpinning them summarised in the preliminary discussion.

Note: If any the signals appear to change when they shouldn't or don't change when they should, check your drawing. If your drawing is correct, call the instructor for assistance.

Question 1
Which of the four line codes is bi-polar?

Question 2
Which of the four line codes represents the logic-0 in the data using 0V?

Question 3
Use the rule for RZ-AMI to determine the number of logic-1s in the portion of the *X* output's data sequence being displayed.



Ask the instructor to check your work before continuing.

Part B – Observations of line codes in the frequency domain

The next part of this experiment gets you observe the four Emona DATEx line code outputs in the frequency domain.

21. Select the NRZ-L line code by returning the Sequence Generator module's soft DIP-switches to 00.

22. Close the scope's VI.

23. Launch and run the NI ELVIS II Dynamic Signal Analyzer VI.

    Note: If the Dynamic Signal Analyzer VI has launched successfully, the instrument's window will be visible (see Figure 4).

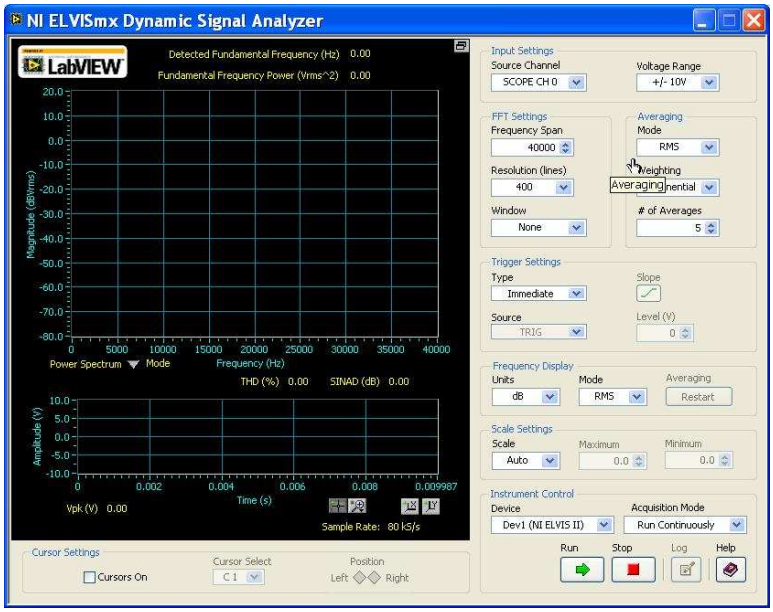

Figure 4

24. Adjust the signal analyzer's controls as follows:

Input Settings

- *Source Channel* to *SCOPE CH 1*
- Voltage Range to ±10V

FFT Settings

- *Frequency Span* to *40,000*
- *Resolution* to *400*
- *Window* to *7 Term B-Harris*

Averaging

- *Mode* to *RMS*
- *Weighting* to *Exponential*
- *# of Averages* to *3*

Trigger Settings

- *Type* to *Digital*

Frequency Display

- *Units* to *dB*
- *Mode* to *RMS*
- *Scale* to *Auto*
- *Cursors On* box unchecked (for now)

Once adjusted correctly, the signal analyzer's display should look like Figure 5 below.

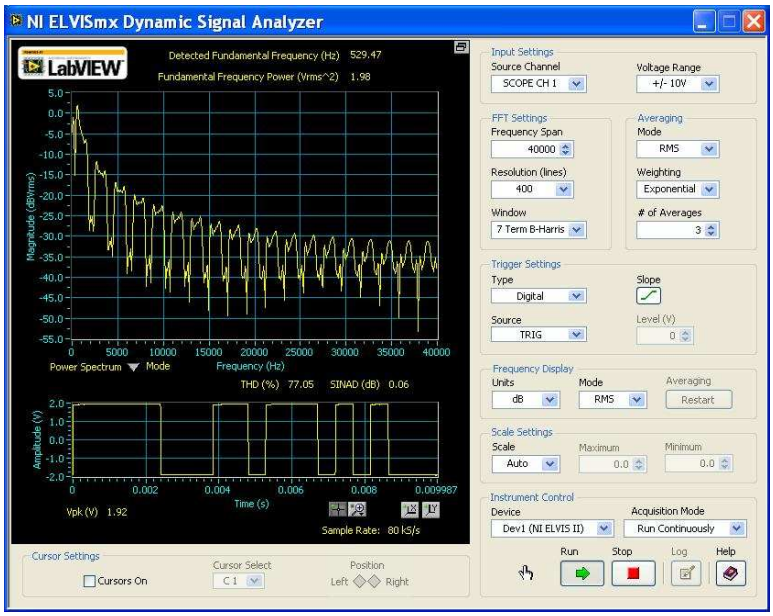

Figure 5

If you've not used the signal analyzer before, its display may need a little explaining here. There are actually two displays, a large one on top and a much smaller one underneath. The smaller one is a time domain representation of the input (in other words, the display is a scope).

The larger of the two displays is the frequency domain representation of the 31-bit sequence on the Sequence Generator module's *LINE CODE* output. The pattern of humps (or lobes) and nulls is typical of digital data signals (for reasons explained in Experiment 14).

25. Compare the spectral composition of the four line codes.

    Note: You should observe that, while all four codes exhibit the pattern mentioned above, their spectral composition is different. Recall that this is one of the reasons for choosing to use one code over another.

One of the disadvantages of BiΦ-L (Manchester code) is that it requires twice the bandwidth of the other three codes to propagate the signal along a transmission line. While this limitation cannot be demonstrated using the DATEx directly, we can examine the spectrum of the four signals more closely to see that BiΦ-L is different to the other three in important ways.

26. Adjust the Sequence Generator module to output the NRZ-L line code.

27. Count the number of lobes in the signal's spectrum (for a span of 40kHz). Record this number in Table 2 below.

28. Repeat Steps 26 and 27 for the other three codes.

Table 2

Line code	Lobes (in 40kHz span)
NRZ-L	
BiΦ-L	
RZ-AMI	
NRZ-M	



Ask the instructor to check your work before continuing.

To compare BiΦ-L to the other codes in another way, we'll use the signal analyzer's cursors to examine the null frequencies.

29. Activate the signal analyzer's cursors by checking (that is, ticking) *Cursors On* box.

    Note 1: When you do, green horizontal and vertical lines should appear on the signal analyzer's frequency domain display.

    Note 2: If you have used the signal analyzer's cursors before, jump to Step 34 on the next page.

The NI ELVIS II Dynamic Signal Analyzer has two cursors *C1* and *C2* that default to the left most side of the display when the signal analyzer's VI is launched. They're repositioned by "grabbing" their vertical lines with the mouse and moving the mouse left or right.

30. Use the mouse to grab and move the vertical line of cursor *C1*.

    Note: As you do, notice that cursor *C1* moves along the signal analyzer's trace and that the vertical and horizontal lines move so that they always intersect at *C1*.

31. Repeat Step 30 for cursor *C2*.

    Note: Fine control over the cursors' position is obtained by using the cursor's *Position* control in the *Cursor Settings area (below the display*).

The NI ELVIS II Dynamic Signal Analyzer includes a tool that measures the ***difference*** in magnitude and frequency between the two cursors. This information is displayed in green between the upper and lower parts of the display.

32. Move the cursors while watching the measurement readout to observe the effect.

33. Position the cursors so that they're on top of each other and note the measurement.

    Note: When you do, the measurement of difference in magnitude and frequency should both be zero.

Usefully, when one of the cursors is moved to the extreme left of the display, its position on the X-axis is zero. This means that the cursor is sitting on 0Hz. It also means that the measurement readout gives an absolute value of frequency for the other cursor. This makes sense when you think about it because the readout gives the difference in frequency between the two cursors but one of them is zero.

34. Adjust the Sequence Generator module to output the NRZ-L line code.

35. Move *C1* to the extreme left of the display.

36. Align *C2* with the first null (that is, the deep trough between the first and second lobes in the signal's spectrum).

37. Measure the null's frequency and record this in Table 3 below.

38. Measure and record the frequency of the first null in the spectrum of the other three line codes.

Table 3

Line code	Frequency of first null
NRZ-L	
BiΦ-L	
RZ-AMI	
NRZ-M	

Question 4
Based on your results in Tables 2 and 3, which of the four codes is the odd one out?



Ask the instructor to check your work before continuing.

Part C – Bit-clock regeneration – without squaring

Recall from the preliminary discussion that, for line codes containing a significant spectral component at the bit-clock frequency, BCR simply involves using a band-pass filter with an appropriate selectivity to pick-out the bit-clock component. Naturally, this is a sinewave but it can be readily turned into a squarewave using a comparator and used as a local bit-clock.

Line codes vary in terms of the significance of their bit-clock component. The next part of the experiment demonstrates this.

39. Adjust the Sequence Generator module to output the NRZ-L line code.

40. Set the signal analyzer's *Frequency Span* to 4,000Hz instead of 40,000Hz.

41. Use the *C2* cursor to locate the sinewave in the line code signal's spectrum that is at the bit-clock frequency.

    Note: The Master Signals module's *2kHz DIGITAL* output is actually 2.083kHz. So, the bit-clock component is the sinewave at or very near this frequency.

42. Determine the component's relative size and record the value in Table 4 below.

    Note 1: The relative size of the component is determined by following the horizontal dashed line from the cursor's to the Y-axis and reading off its dB figure.

    Note 2: This is the component's size in decibels relative to the largest component in the line code signal.

43. Convert the dB figure to a ratio using the equation:

$$A_V = Log^{-1}(\frac{dB}{20})$$

44. Determine the relative size of the component at the bit-clock frequency in the other three line codes (in both dB and as a ratio).

Table 4

Line code	Bit-clock component (in dB)	Bit-clock comp. (as a ratio)
NRZ-L		
BiΦ-L		
RZ-AMI		
NRZ-M		

Question 5

Which of the DATEx line codes has the biggest component at the original bit-clock frequency?



Ask the instructor to check your work before continuing.

Part D – Bit-clock regeneration – with squaring

For line codes without a significant spectral component at the bit-clock frequency, BCR necessarily involves squaring the signal first. This generates a more significant spectral component at the bit-clock frequency that may be significant enough to be readily filtered and cleaned-up with a comparator for use as a local bit-clock. The next part of the experiment demonstrates this.

45. Adjust the Sequence Generator module to output the NRZ-L line code.

46. Locate the Tuneable Low-pass Filter module on the DATEx SFP and set its soft *Gain* control to about the middle of its travel.

47. Turn the Tuneable Low-pass Filter module's soft *Cut-off Frequency Adjust* control fully clockwise.

48. Modify the set-up as shown in Figure 6 below.

    Note: Remember that the dotted lines show leads already in place.

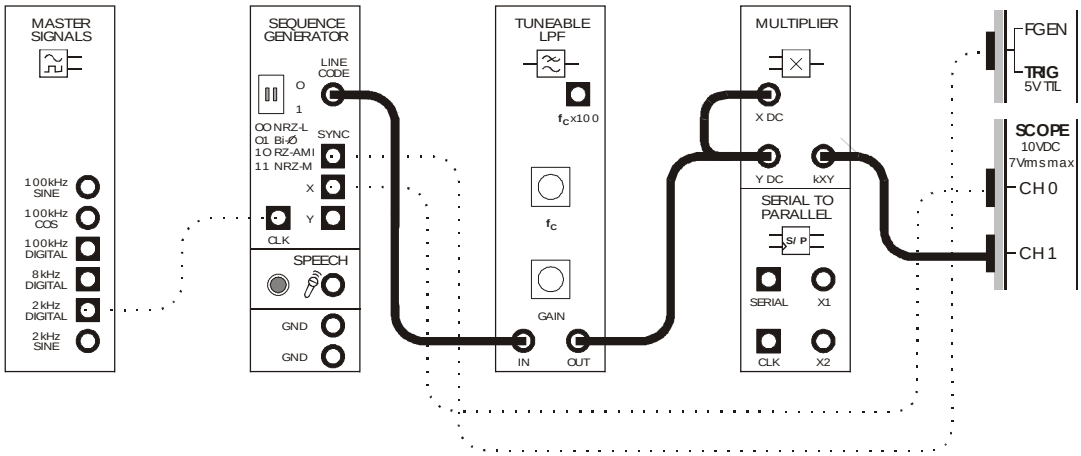

Figure 6

The set-up in Figure 6 can be represented by the block diagram in Figure 7 below. The Tuneable Low-pass Filter module is used to model signal-shaping to reduce signal's bandwidth. The Multiplier module is used to multiply the shaped line code signal with itself effectively squaring it. This multiplies every sinewave in the signal with each other producing a multitude of sum and difference frequencies. Some of these sinewaves are the same frequency as the component in the signal at the original data signal's bit-clock frequency and so add to and enlarge it.

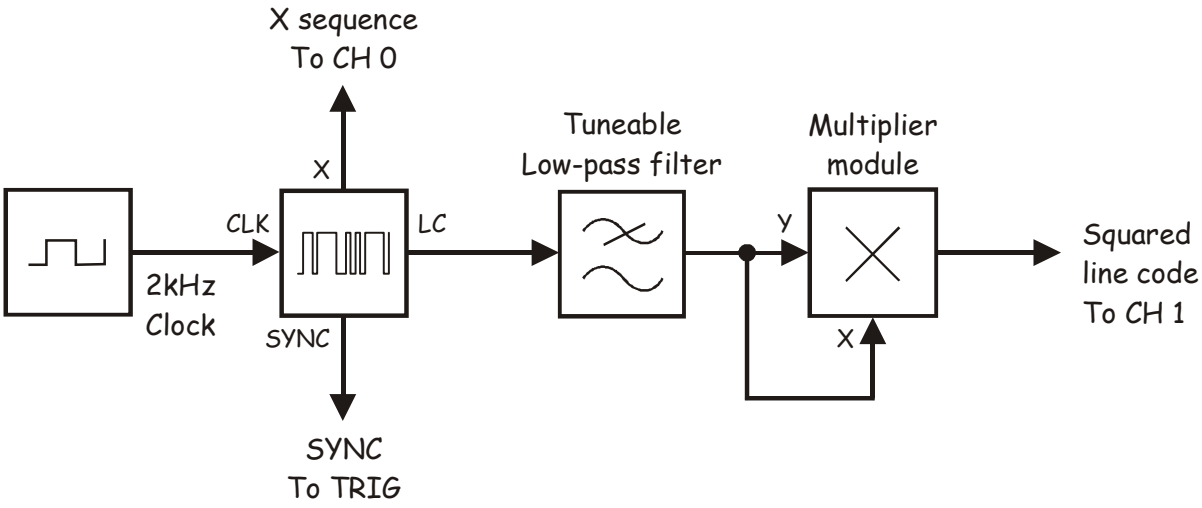

Figure 7

49. Use the *C2* cursor to locate the sinewave in the squared line code signal's spectrum that is at the bit-clock frequency.

50. Determine the component's relative size and record the value in Table 4 below.

51. Determine the relative size of the component at the bit-clock frequency in the other three line codes.

Table 5

Line code	Bit-clock component (in dB)
NRZ-L	
BiΦ-L	
RZ-AMI	
NRZ-M	

Question 6
Compare the Figures in Table 5 with those in Table 4. What effect does squaring the line code's signal have on the sinewave in its spectrum at the bit-clock frequency?

Question 7
Which of the squared line codes has the biggest component at the original bit-clock frequency?

Question 8
What is needed to pick this sinewave out of the signal's spectrum and turn it into a squarewave?



Ask the instructor to check your work before finishing.

Name: _____

Class: _____

16 - Delta modulation and demodulation

Experiment 16 – Delta modulation and demodulation

Preliminary discussion

Despite its cryptic name, *delta modulation* (or Δ-modulation) is a pulse modulation scheme. Other examples of pulse modulation schemes that you may have learnt more about using the Emona DATEx include: pulse amplitude modulation (PAM), pulse code modulation (PCM) and pulse-width modulation (PWM).

Delta modulation is like PWM in that it samples the analog input signal and converts it directly into a serial stream of 1s and 0s without the need for a discrete analog-to-digital conversion process. As such, delta modulation is also like PWM in that the digital signal on the delta modulator's digital output is a complex waveform that includes a component at the message frequency.

Despite the similarity between delta modulation and PWM, it's actually more useful to describe its operation by comparing it to that of PCM. PCM samples the analog input signal at fixed intervals and the samples are converted to fixed length sequential binary numbers. Importantly, these binary numbers are directly (or, in some cases, mathematically) proportional to the samples' size.

Delta modulation effectively samples the analog input signal at regular fixed intervals also. However, it then compares the present sample to the previous one and outputs a 1-bit data word to indicate whether the new sample is smaller or larger than the previous one.

The block diagram of a basic delta modulation system is shown in Figure 1 below.

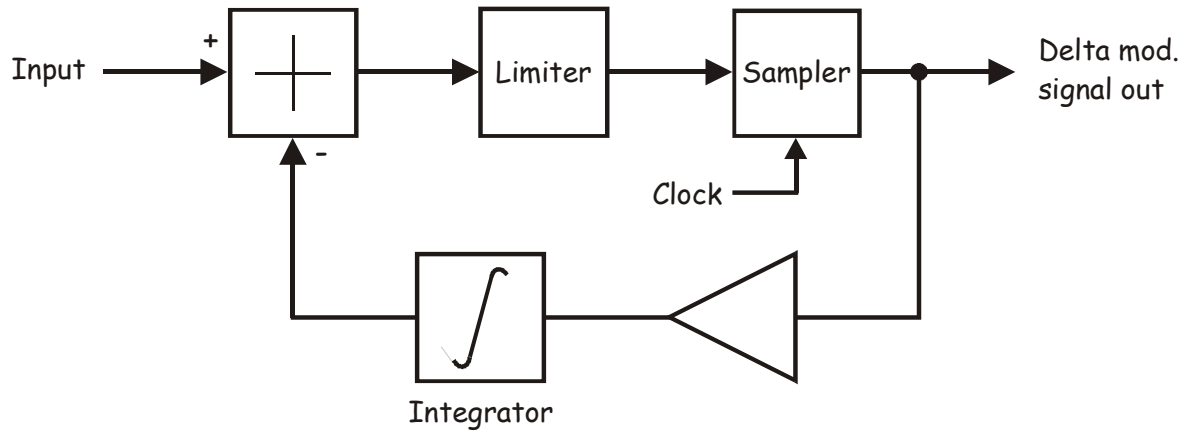

Figure 1

As the delta modulation system in Figure 1 is a feedback loop, a mathematical analysis of its operation is complicated and not attempted here. For the purpose of this exercise, think of its operation in the following way.

The Sampler's output (which is also the modulator's output) is a bi-polar pulse train. That is, instead of using 0V and 5V for the two logic states, positive and negative voltages are used (eg ±2.5V). This is done so that the Integrator produces a ramp voltage that changes direction in response to changes in logic state on the Sampler's output.

The Integrator's output is subtracted from the message using a Summing circuit to produce an error signal. The polarity of the error signal is a function of the relative absolute voltages of the analog input (the message) and Integrator's output. So, if the Integrator's output is greater than the message, the error signal is one polarity. If the Integrator's output is smaller than the message the error signal is the opposite polarity. This allows the modulator to "know" which of the two signals is bigger (though this information is captured only at the moment of sampling – see below) and this is essential for achieving an Integrator output that approximates the message. Specifically, the Integrator's output "hunts" the analog input voltage and so its positive or negative going ramp voltages produce a sawtooth waveform that tracks the message signal's shape (and this can be seen in Figure 2 on the next page).

The Limiter continuously converts the status of the relative sizes of the sawtooth and message waveforms to a logic state. That is, one logic state indicates when the sawtooth waveform is bigger than the message but reverses the moment that it is smaller. The Sampler samples this information to convert it to clocked data and level translates it to the corresponding positive or negative voltage (mentioned above). Importantly, by definition, sampling is a periodic process and so the Sampler's output only reflects the relative sizes of the sawtooth and message waveforms at the sampling moment.

Now let's put this together. At switch-on, the Sampler's output starts at either a positive or negative voltage which commences a ramp on the Integrator's output. Now, suppose that the Integrator's output is smaller than the message (a likely proposition) but travelling in the same direction. This produces an error signal on the Summer's output with a particular polarity that is immediately converted to a particular logic state by the Limiter. This logic state is captured on sampling and a decision is made by the Sampler to maintain its output voltage. In other words, nothing changes.

These conditions are maintained for every sample until such time as the absolute ramp voltage exceeds absolute message voltage (either because the ramp catches up with the message or the message reverses direction). Once this happens, the polarity of the error signal reverses which immediately causes the logic state on the Limiter's output to reverse. This new logic state is sampled and captured by the Sampler forcing to reverse its output voltage, in turn causing the Integrator's ramp to reverse direction. These new conditions are now maintained for every sample until such time as the ramp returns to an absolute voltage that is smaller than the absolute message voltage.

Figure 2 below shows an example of the sawtooth waveform that would be generated on the Integrator's output and the digital signal on the Sampler's output for a sinusoidal message to a delta modulator. (Note: The clock frequency of the Sampler in this example is three times the message frequency.)

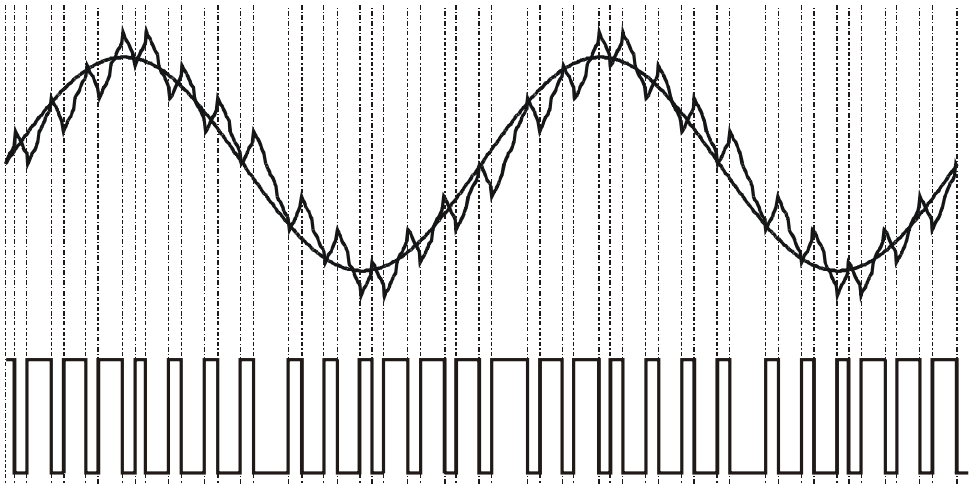

Figure 2

There is an interesting point to observe about these signals. At first glance, it appears as though the sampling rate is irregular. However, this is not the case. In instances where there are wider than normal gaps between the changes in the ramp's direction, sampling has taken place. But, as the relative relationship between the sawtooth waveform and the message is the same as the previous sample, there is no change of direction in the sawtooth waveform and therefore no change in logic state on the Sampler's output.

Finally, Figure 1 shows a discrete amplifier section between the Sampler and the Integrator to control the loop gain. In practice the amplification can be incorporated into the Integrator or Summer circuits.

The experiment

For this experiment you'll use the Emona DATEx to implement the delta modulation scheme. You'll then experiment with adjusting the integrator's step size to observe the effect on the delta modulator's slope overload and granularity characteristics. Finally, you'll demodulate the delta signal using low-pass filtering and investigate the quality of the recovered message qualitatively and quantitatively using SNDR.

It should take you about 50 minutes to complete this experiment.

Pre-requisites:

Experiments 1, 2 & 3 (Vol. 1): Intros to the NI ELVIS II, the Emona DATEx and SFP control
Experiment 13 (Vol. 1): Sampling and reconstruction
Experiment 10 (Vol. 2): Pulse code modulation and signal-to-noise distortion ratio
Experiment 14 (Vol. 1): PCM encoding (desirable)
Experiment 15 (Vol. 1): PCM decoding (desirable)
Experiment 6 (Vol. 2): Pulse-width modulation and demodulation (desirable)

Equipment

- Personal computer with appropriate software installed
- NI ELVIS II plus USB cable and power pack
- Emona DATEx experimental add-in module
- Two BNC to 2mm banana-plug leads
- Assorted 2mm banana-plug patch leads

Procedure

Part A – Setting up the delta modulator

Part A of this experiment gets you to implement the delta modulator using the Emona DATEx.

1. Ensure that the NI ELVIS II power switch at the back of the unit is off.

2. Carefully plug the Emona DATEx experimental add-in module into the NI ELVIS II.

3. Set the *Control Mode* switch on the DATEx module (top right corner) to *PC Control*.

4. Connect the NI ELVIS II to the PC using the USB cable.

   Note: This may already have been done for you.

5. Turn on the NI ELVIS II power switch at the rear of the unit then turn on its *Prototyping Board Power* switch at the top right corner near the power indicator.

6. Turn on the PC and let it boot-up.

7. Launch the NI ELVISmx software.

8. Locate the Adder module and set its soft *G* and *g* controls to the middle of their travel (which should have the arrowheads pointing to the 12 o'clock position).

9. Connect the set-up shown in Figure 3 below.

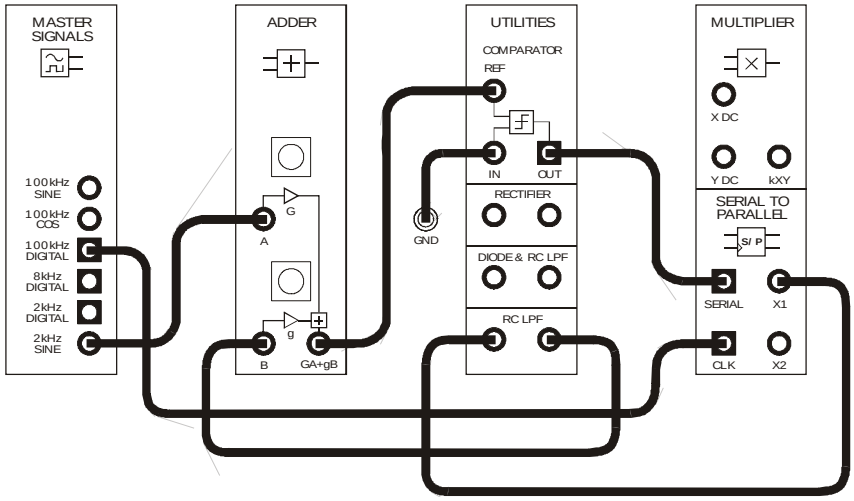

Figure 3

This set-up can be represented by the block diagram in Figure 4 on the next page. The Master Signals module's *2kHz SINE* output models the message. The remaining blocks implement the delta modulator.

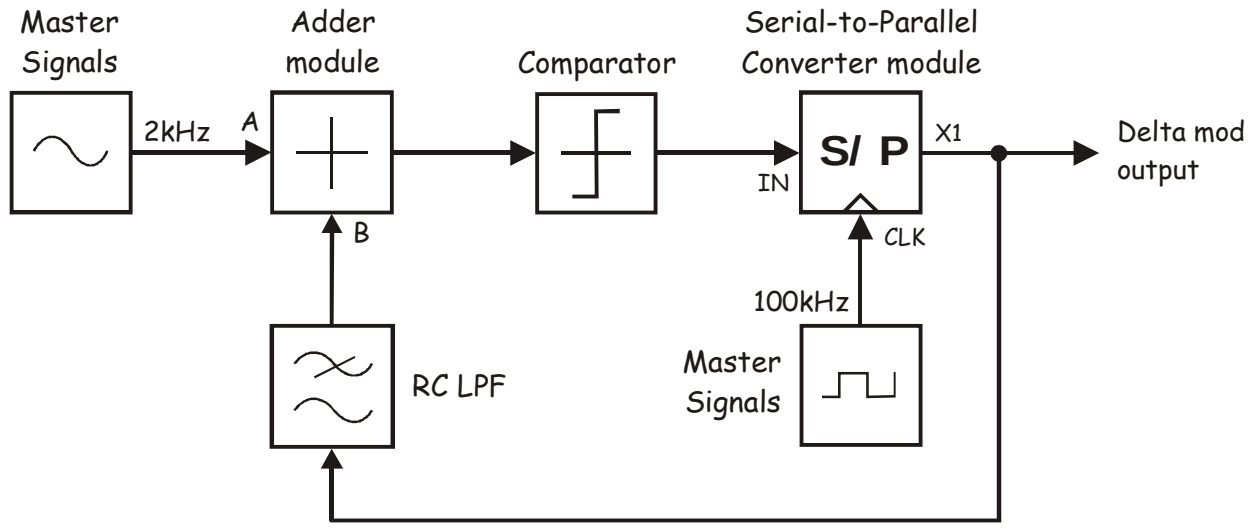

Figure 4

Relating this functional block diagram to the generic block diagram of a delta modulator in the preliminary discussion (Figure 1), the Utilities module's RC LPF models the Integrator, the Adder module implements the Summer, the Utilities module's Comparator implements the Limiter, and the Serial-to-Parallel Converter module models the Sampler. Loop gain is provided and controlled by the Adder module.

A few important points should be made here before you continue with the experiment. First, as the DATEx doesn't have a Sampler, the Serial-to-Parallel Converter module is used in its place. Although this module is designed primarily for another purpose, it has a bipolar output and provides a clocked version of the data on its input which are the two key functions required of the Sampler in a delta modulator. Second, the modulator's sampling and data rate correspond with a 50kHz clock and not the 100kHz clock connected to the Serial-to-Parallel Converter module. This is because the module sends the data to alternate outputs on every clock pulse so the data rate of each output corresponds with a 50kHz clock. Third, the accumulated phase shifts around the loop return a signal to the Adder module's *B* input that is inverted relative to the message. This facilitates the delta modulator's requirement for a subtraction of the Integrator's output from the message using the Adder module (in the same way that adding a negative number to a positive number results in a subtraction of the two).

10. Connect the scope's Channel 0 input to the set-up as shown in Figure 5 below.

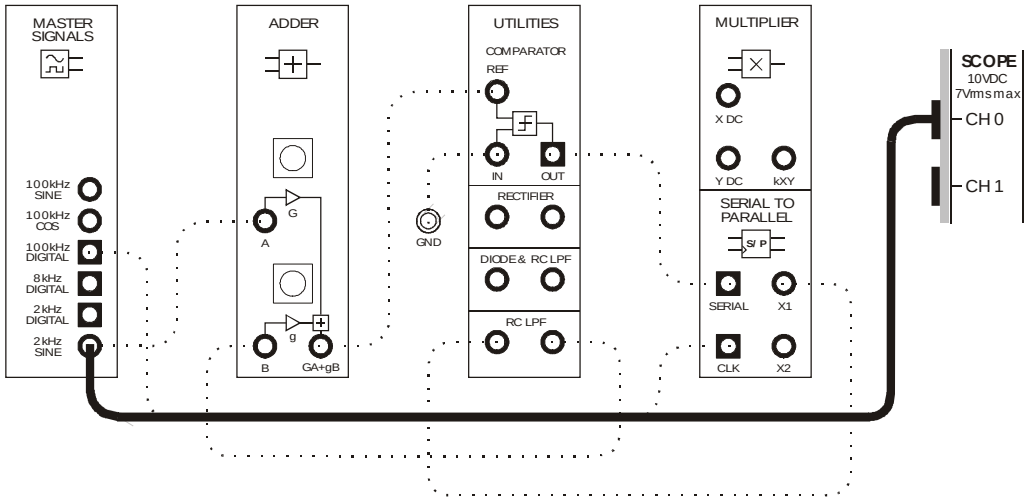

Figure 5

11. Launch and run the NI ELVIS II Oscilloscope.

12. Adjust the scope to view the message. Essential scope settings include:

    - *Timebase* to *200µs/div*
    - *Trigger Type* to *Edge*
    - *Trigger Source* to *CH 0*

13. Determine the message signal's peak-to-peak amplitude and make a note of the value.

14. Modify the set-up as shown in Figure 6 below.

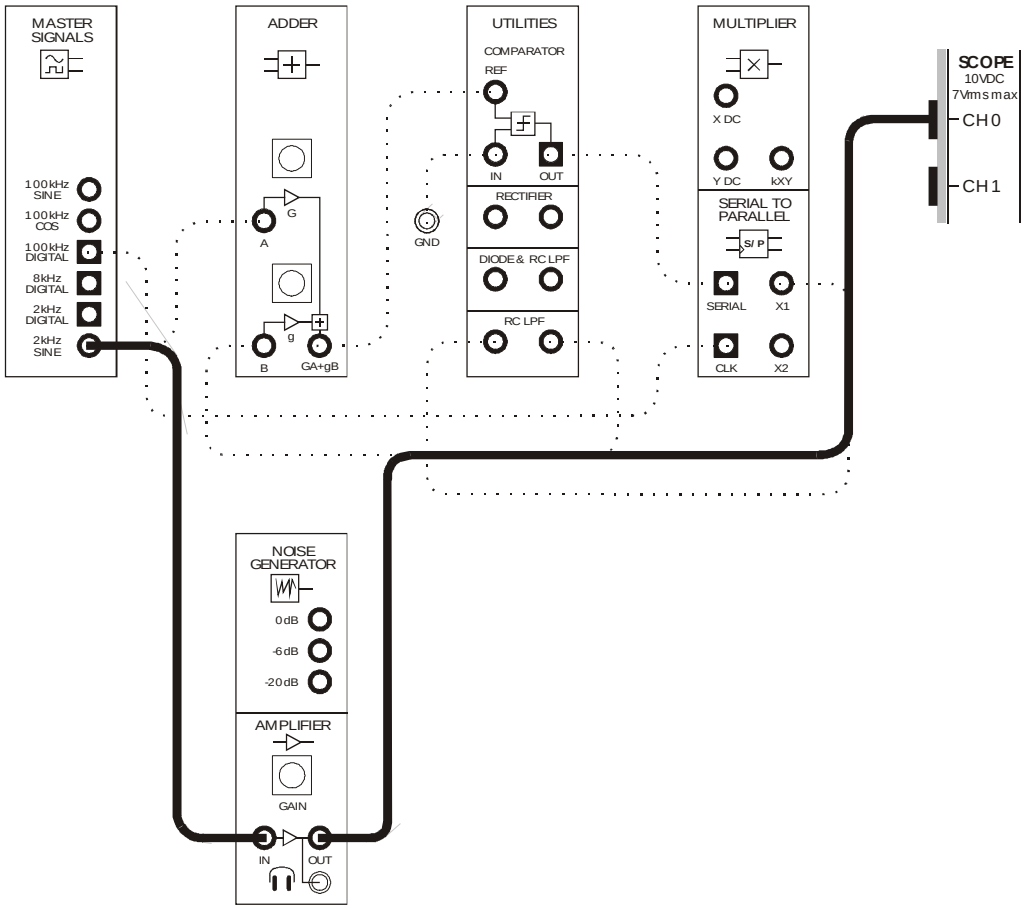

Figure 6

15. Use the Amplifier module's soft *GAIN* control to set its output to the same amplitude that you measured at Step 13.

Ask the instructor to check your work before continuing.

16. Connect the scope's Channel 1 input to the set-up as shown in Figure 7 below.

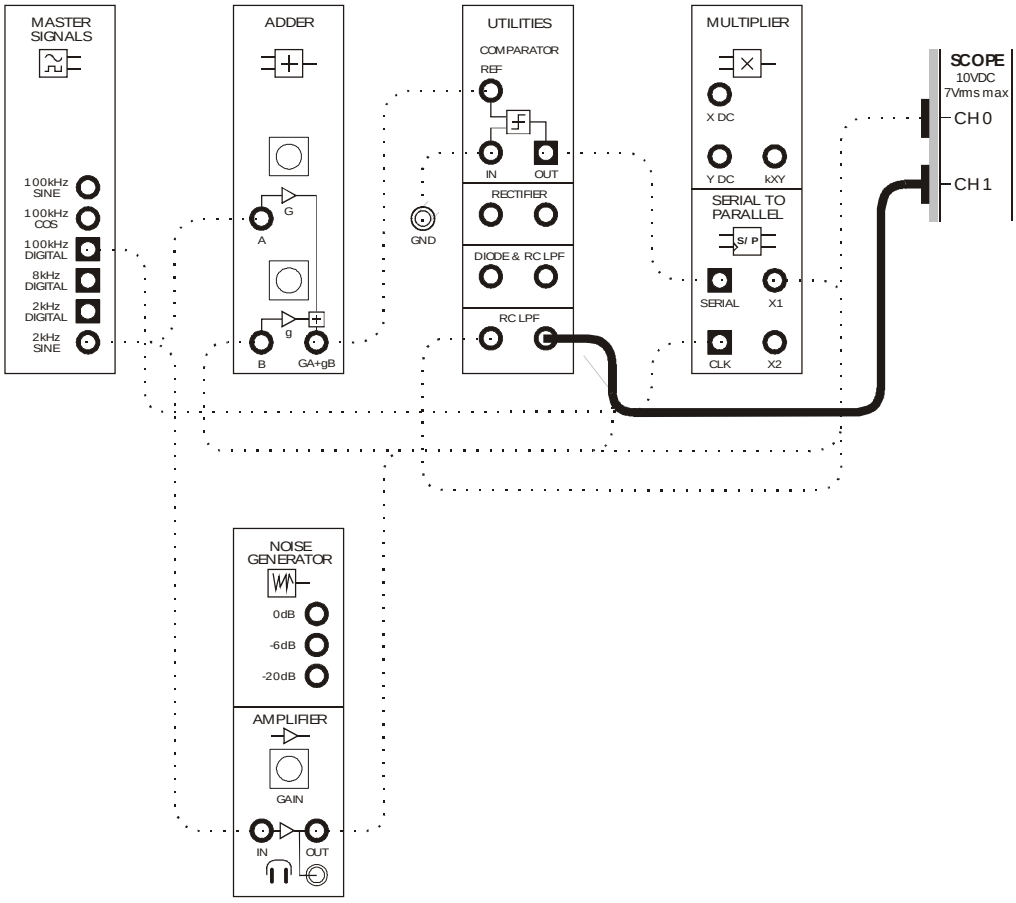

Figure 7

The scope's connections to the set-up can be represented by the block diagram in Figure 8 on the next page. Notice that the Amplifier module isn't shown. This is because it's not contributing to the implementation of delta modulation. Instead, it's being used to invert the message so that it's in phase with the Integrator's output and the two signals can be conveniently compared.

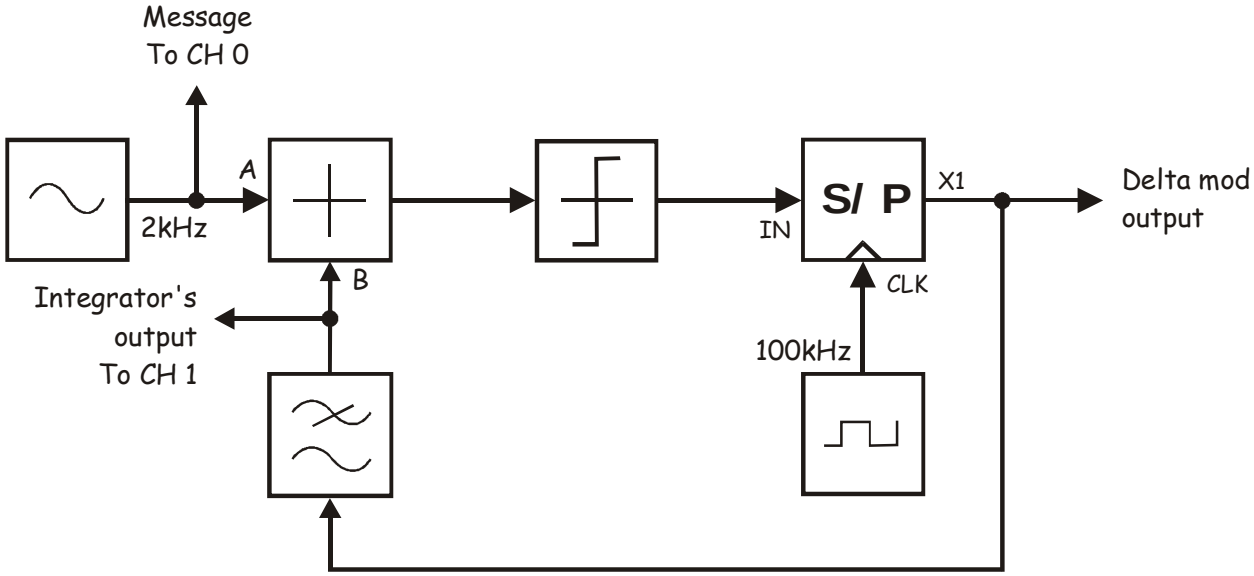

Figure 8

17. Check that the scope's two *Scale* controls are on the same setting (the *1V/div* position is probably best).

18. Enable the scope's Channel 1 input to observe the signal on the RC LPF's output as well as the message.

    Note: Remember that the RC LPF is being used to model the Integrator.

19. Check that the RC LPF's output tracks the message in much the same way as theoretically predicted in Figure 2 (in the preliminary discussion).

    Note 1: The RC LPF's output will not be as good an approximation of the message as the Integrator's output in Figure 2 but it should exhibit similar features. Reasons for the differences between them will be investigated in Part B.

    Note 2: If the RC LPF's output isn't similar to the Integrator's output in Figure 2, you'll need to double-check your wiring.

Ask the instructor to check your work before continuing.

20. Modify the scope's Channel 1 connection to the set-up as shown in Figure 9 below.

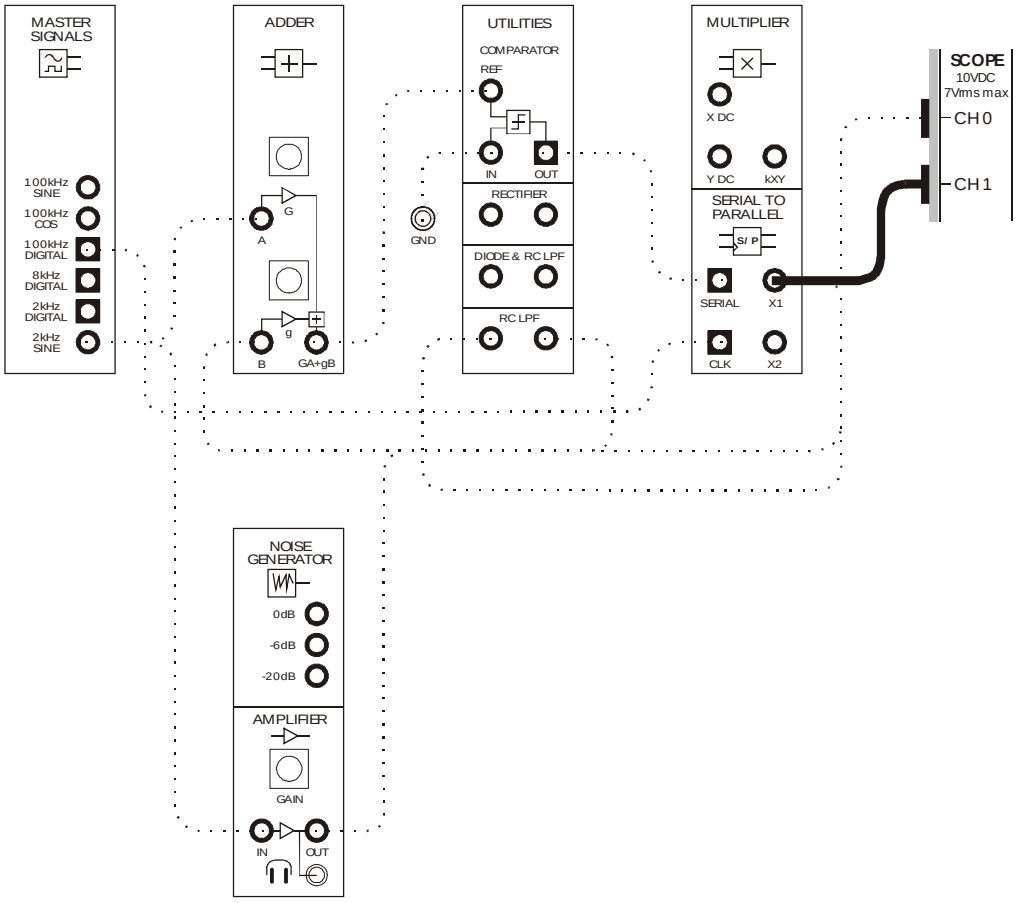

Figure 9

The new scope connection to the set-up can be represented by the block diagram in Figure 10 on the next page.

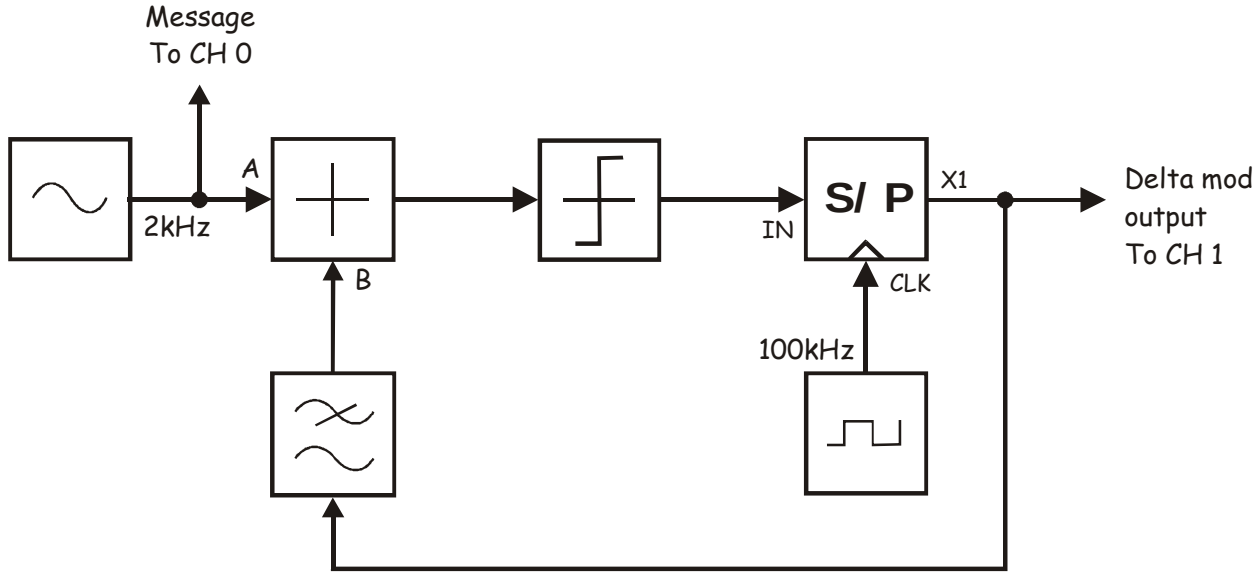

Figure 10

21. Separate the signals by setting the scope's Channel 0 *Vertical Position* control to +2V and its Channel 1 *Vertical Position* control to -2V.

Question 1
The digital signal on the delta modulator's output is a serial stream of 1-bit numbers. What do these numbers represent?

Question 2
The digital signal on the delta modulator's output is a complex waveform (that is, it's made up of many sinewaves). State the frequency of one of these sinewaves. **Tip:** No calculations are needed to answer this question.

Question 3

What's the significance of this sinewave?



Ask the instructor to check your work before continuing.

Part B – Slope overload and granularity

You will have noticed at Step 19 that the RC LPF's sawtooth output is not as good an approximation of the message as the Integrator's output in Figure 2. This is an important issue with delta modulation because, the more closely the Integrator's output approximates the message, the easier it is to recover the message from the digital data without distortion and noise.

There are several factors that the affect closeness of the Integrator's output to the message and these include: the integration rate, the loop gain and the sampling frequency. Part B gets you to investigate one of these and introduces you to two delta modulation performance specifications called *slope overload* and *granularity*.

22. Return the scope's Channel 1 input to the RC LPF's output as shown in Figure 11 below.

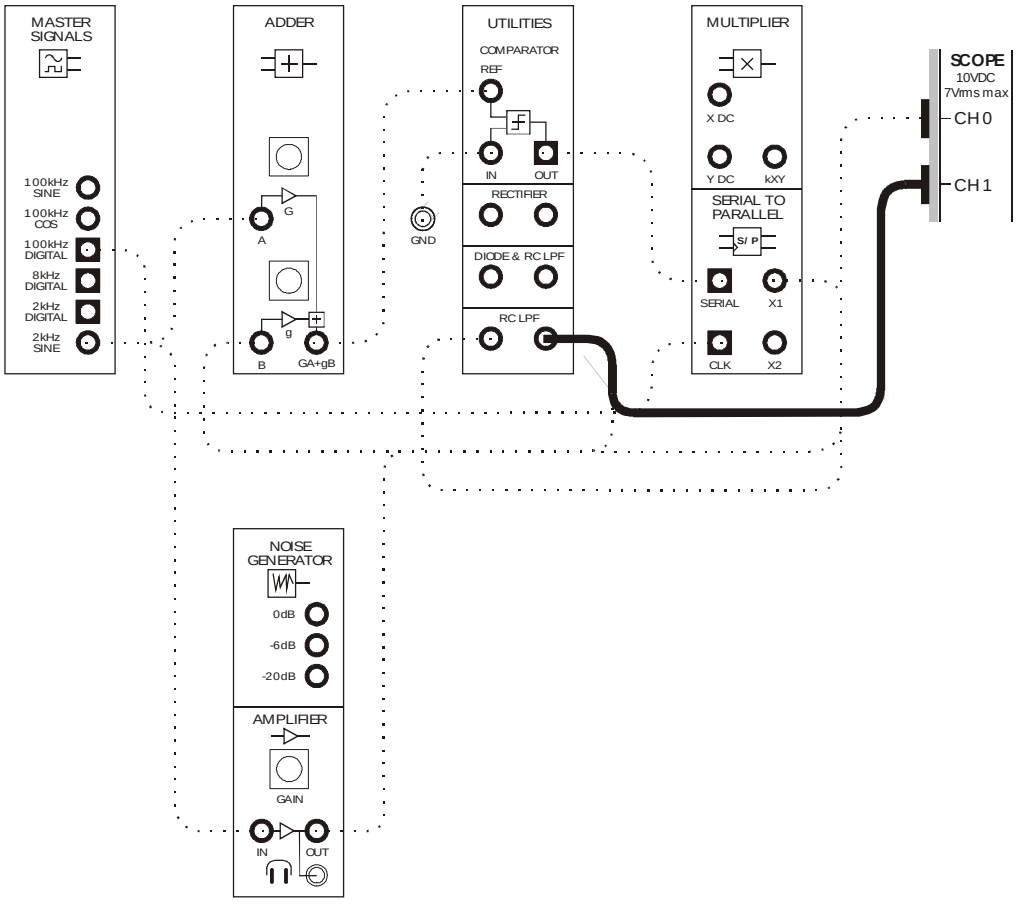

Figure 11

23. Realign the traces by setting both of the scope's *Vertical Position* controls 0V.

24. Look closely at the two signals and note when the sawtooth waveform changes back and forth across the message and when it doesn't.

You'll notice that the sawtooth waveform changes back and forth across the message when the message's rate of change is relatively slow (at the peaks in the case of a sinewave). But, you'll also notice that the sawtooth waveform doesn't cross the message when the message's rate of change is relatively fast (at the sinewave's zero crossover points). This inability of the Integrator's output to keep up with quick changes in the message is called *slope overload* and is also shown in Figure 12 below.

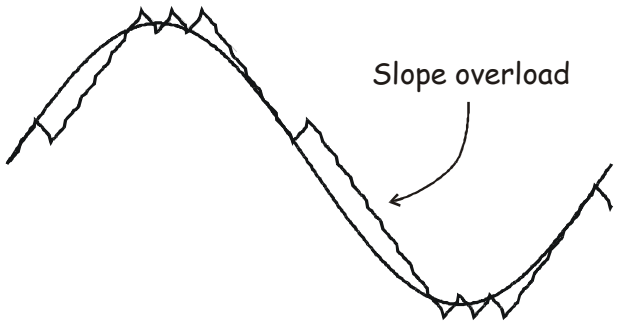

Figure 12

Slope overload produces spectral components in the digital data signal at frequencies near the copy of the message and so can distort it at the demodulator's output. To minimise slope overload, the Integrator's "step size" must be increased. That is, the amount that the ramp can change in a given sampling period must be increased. This can be achieved in one of two ways. Either increase the integration rate (which we cannot do here because this is a fixed property of the RC LPF) or increase the loop gain. This second option is available to us.

25. Slowly increase the voltage gain of the Adder module's *B* input by turning its soft *g* control clockwise and observe the effect on the RC LPF's output.

    Note: This increases the loop gain, in turn increasing the Integrator's step size.

26. Stop increasing the voltage gain of the Adder module's *B* input when its soft *g* control is at the 3 o'clock position.

To maintain the comparison between the Integrator's output and the message, the Amplifier module's gain must be reduced.

27. Set both of the scope's *Scale* controls to the *500mV/div* position.

28. Reduce the Amplifier module's gain but stop the moment the Integrator's sawtooth waveform crosses the message every time it changes direction.

    Note: When the Amplifier's gain is the correct level, the two signals should look similar to Figure 13 below.

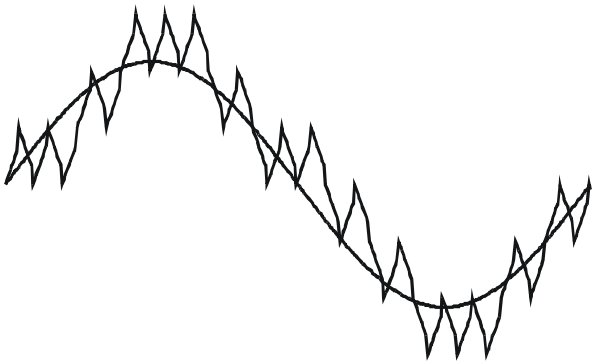

Figure 13

Notice that the Integrator's output now has several more "teeth" during the time that the message signal changes quickly (at the sinewave's zero crossing points) than it did when the Integrator's step size was smaller. With the bigger step size the Integrator's output can better track the message and so the slope overload is reduced.

However, a price has been paid. Notice now that the teeth in the Integrator's output at the time that the message signal changes slowly (at the sinewave's peaks) deviate further from the message on one side than they did previously. This is a quantisation error problem which contributes to quantisation noise or *granularity* on the demodulator's output. Thus, obtaining an appropriate step size for the Integrator is a compromise between overload distortion and granularity.

Question 4
Which is worst when the Integrator's step size is relatively small?

☐ Slope overload distortion

☐ Granularity

Question 5
Which is worst when the Integrator's step size is relatively large?

☐ Slope overload distortion

☐ Granularity



Ask the instructor to check your work before continuing.

Part C – Oversampling

An alternative to managing the compromise between slope overload distortion and granularity involves increasing the sampling rate. This allows the step size to be greater while preventing the steps from overshooting the message by so much when the message changes slowly. From a spectrum perspective, increasing the sampling rate forces the other sinewaves that make up the delta signal higher up the spectrum and so easier to remove at demodulation. As such, oversampling is widely used with delta modulation and Part C of the experiment lets you see the improvement for yourself.

29. Launch and run the NI ELVIS II Function Generator VI.

30. Adjust the function generator for a 100kHz output.

    Note: It's not necessary to adjust any other controls as the function generator's *SYNC* output will be used and this is a digital signal.

31. Modify the set-up as shown in Figure 14 below.

    Note: Once the connection is made the scope should display the signals that you had before.

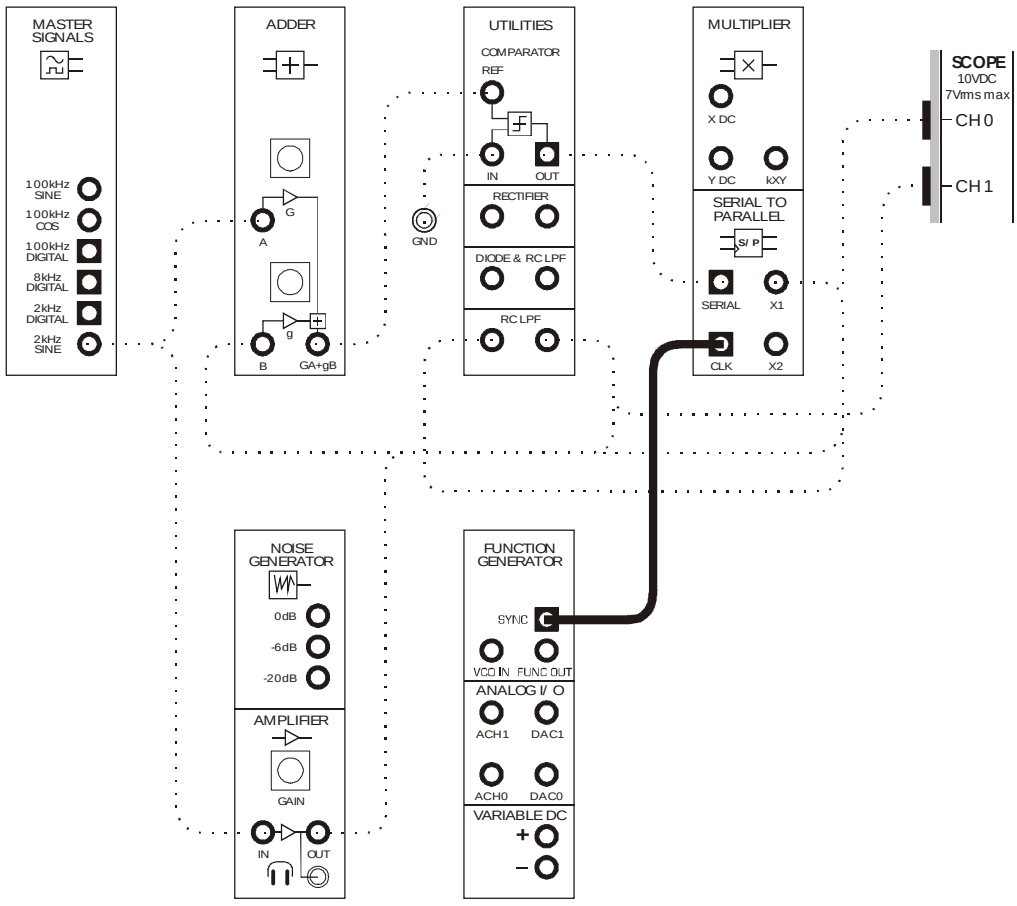

Figure 14

32. Increase the clock in 25kHz steps to 200kHz and observe the effect this has on Integrator's output signal.

Question 6
Oversampling improves

- ☐ the slope overload distortion only.
- ☐ the granularity only.
- ☐ both the slope overload and the granularity.
- ☐ neither the slope overload nor the granularity.



Ask the instructor to check your work before continuing.

Part D – Delta demodulation

Recall that delta modulation produces a pulse train with a spectral composition that includes a copy of the message signal. It's possible to recover the message using low-pass filtering and Part D gets you to do this.

33. Locate the Tuneable Low-pass Filter module and set its soft *Gain* control to the middle of its travel.

34. Turn the Tuneable Low-pass Filter module's soft *Cut-off Frequency Adjust* control fully clockwise.

35. Modify the set-up as shown in Figure 15 below.

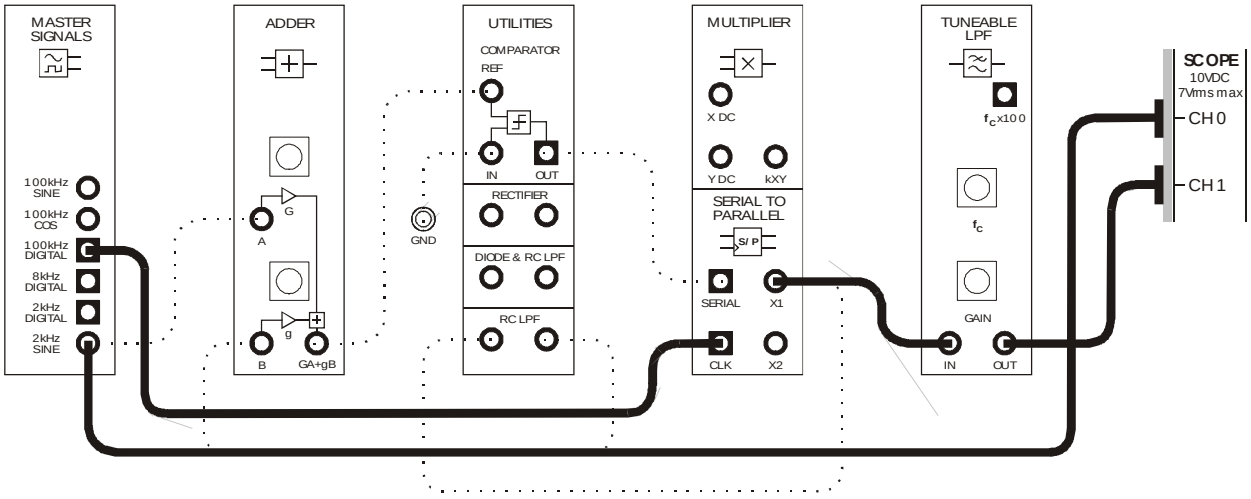

Figure 15

This entire set-up including the modification can be represented by the block diagram in Figure 16 on the next page. The Tuneable Low-pass Filter module is used to demodulate the delta signal and recover the 2kHz message.

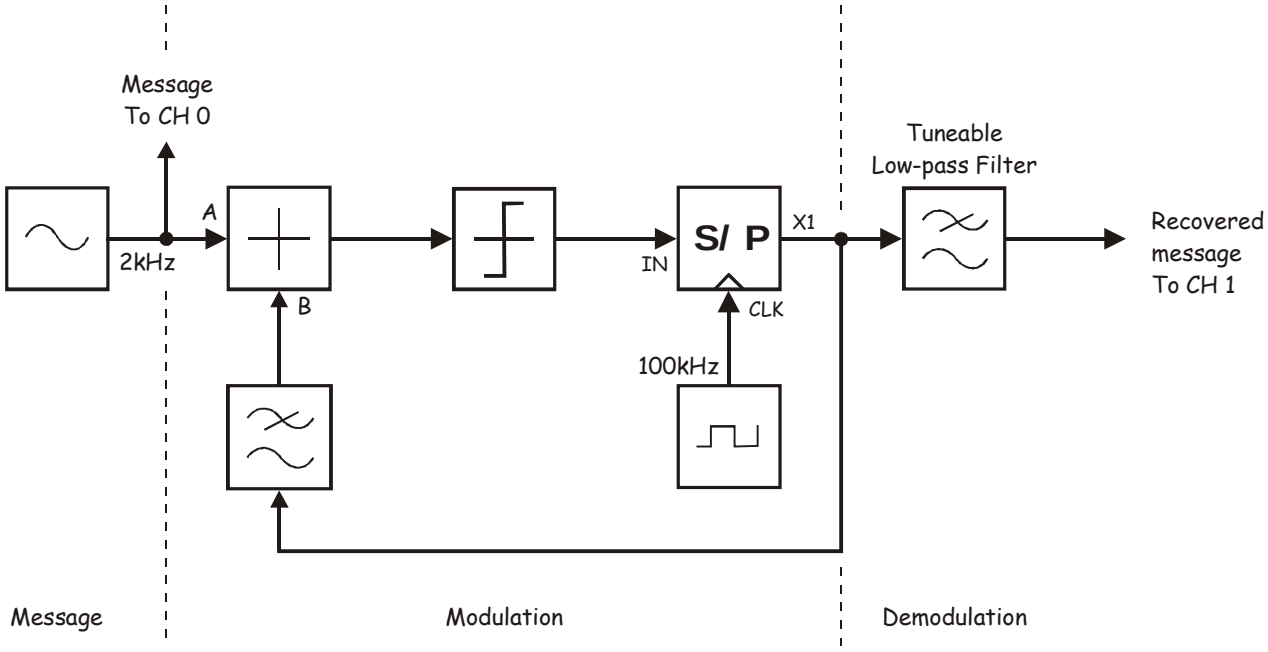

Figure 16

36. Slowly reduce the Tuneable Low-pass Filter module's cut-off frequency until the message has been recovered (ignoring phase shift).

Ask the instructor to check your work before continuing.

Now let's see what your hearing tells you…

37. Turn the Tuneable Low-pass Filter module's soft *Cut-off Frequency Adjust* control fully clockwise again.

38. Modify the set-up as shown in Figure 17 below.

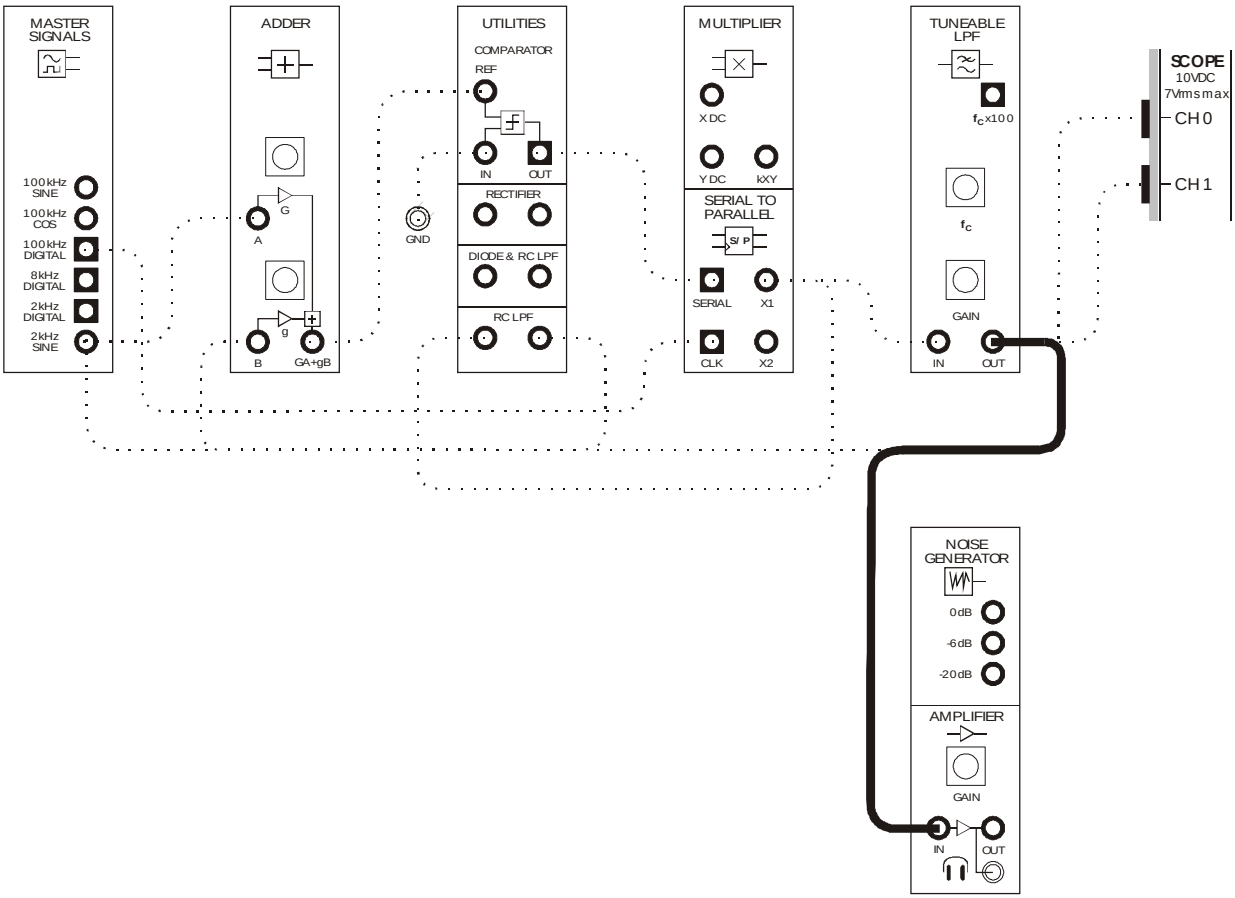

Figure 17

39. Turn the Amplifier module's soft *Gain* control fully anti-clockwise.

40. Without wearing the headphones, plug them into the Amplifier module's headphone socket.

41. Put the headphones on.

42. Increase the Amplifier module's gain until you can comfortably hear the Tuneable Low-pass Filter module's output.

    Note: You should be able to hear the copy of the message (ie the 2kHz tone) plus the other frequency components that make up the delta signal's spectral composition (up to about 15kHz which is the Tuneable Low-pass Filter module's maximum cut-off frequency).

43. Slowly reduce the Tuneable Low-pass Filter module's cut-off frequency until the message has been recovered and it sounds like these other frequency components are minimised or completely removed.

It should be noted here that the Tuneable Low-pass Filter module on the DATEx is a sophisticated circuit - It's a 9th order active elliptical filter. As delta modulation is often used as a low cost analog-to-digital converter, simpler filters costing less are likely to be used for the demodulator. Such filters have a gentler slope and so don't attenuate signals in the roll-off region as sharply.

Question 7
What change to the delta modulator can be made to allow simpler filters to be used by the demodulator without introducing more noise and distortion?



Ask the instructor to check your work before continuing.

Part E – Delta modulation and signal-to-noise distortion ratio (SNDR)
You have just used visual and aural means to tune the delta demodulator to recover the message with minimal noise and distortion. Part E gets you to determine the "quality" of the delta demodulator's output signal quantitatively using SNDR.

44. Determine the RMS voltage of the filter's output and record this value in Table 1 on page 16-30.

45. Locate the Phase Shifter module and set its soft *Phase Change* control to the *0°* position.

46. Set the Phase Shifter module's soft *Phase Adjust* control about the middle of its travel.

47. Modify the set-up as shown in Figure 18 below.

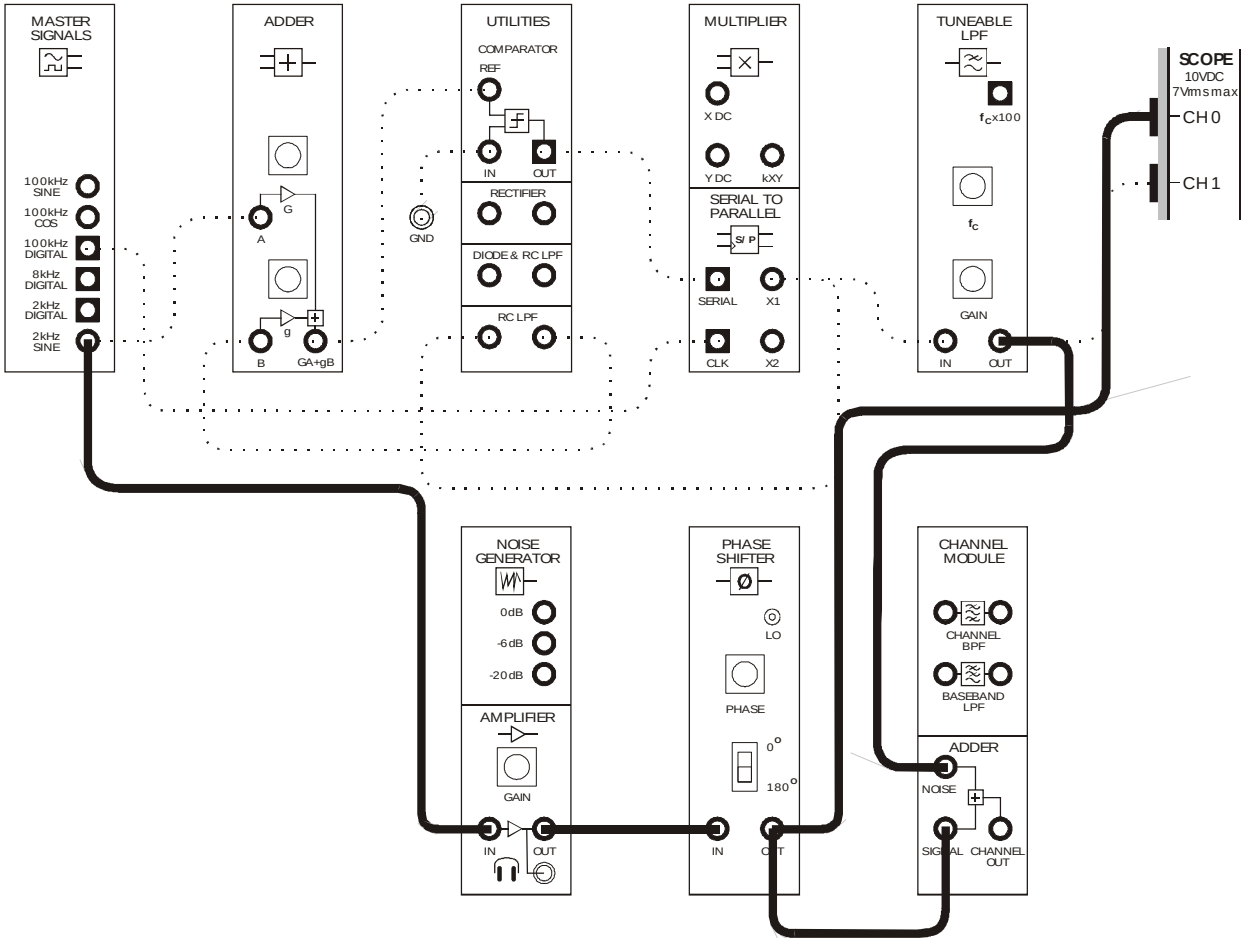

Figure 18

The additions to the set-up in Figure 18 can be represented by the block diagram in Figure 19 below. The 2kHz message is stolen from the Master Signals module and phase shifted using the Phase Shifter module. The signal is then added to the signal on the Tuneable Low-pass Filter module's output using the noise Adder module. Importantly, the noise Adder module wouldn't normally be used for this purpose as it has fixed-gain input. However, the regular Adder module is used to implement the delta modulator. The means that the Amplifier module must be used for one of the noise Adder module's input signals (in this case, for the stolen message) so that the two signals can be made the same size. This is essential for the nulling process in SNDR measurements.

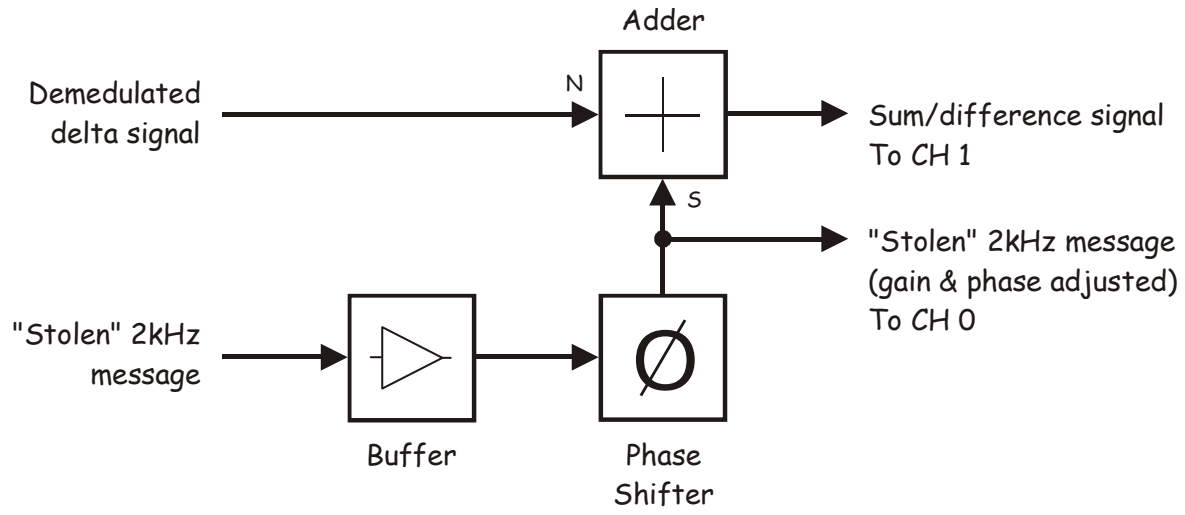

Figure 19

The entire set-up can be represented by the block diagram in Figure 20 on the next page.

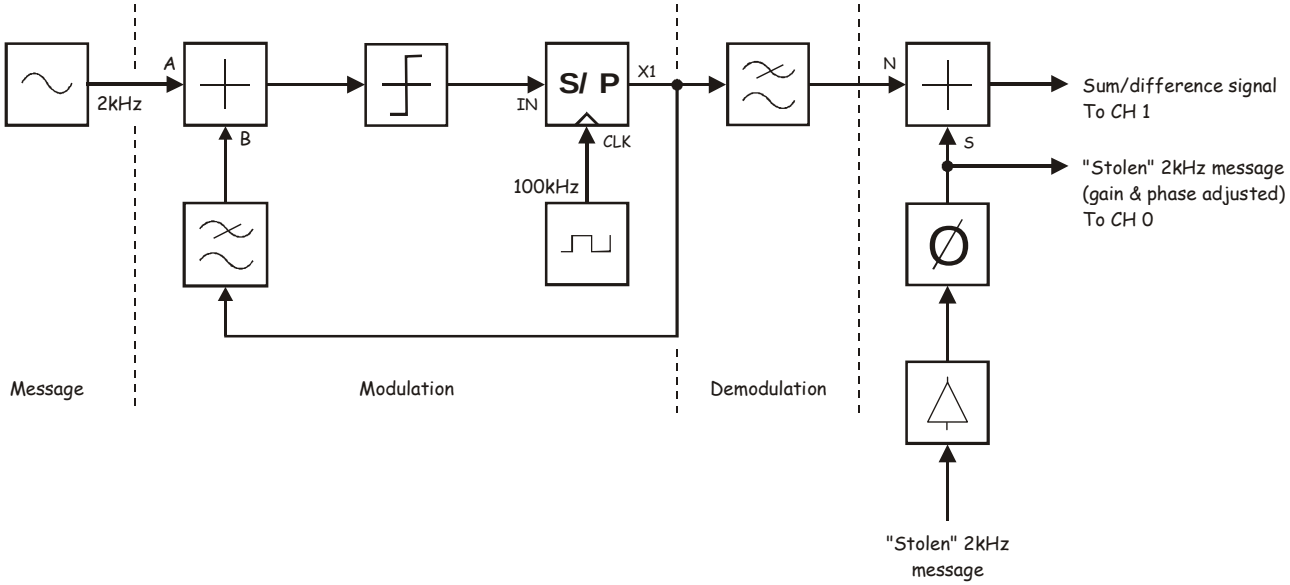

Figure 20

48. Use the Amplifier module's soft *Gain* control to set the stolen message to about the same amplitude as the recovered message.

    Note: Ensure that the scope's two *Scale* controls are set to the same position (the *0.5V/div* position is probably best).

49. Use the Phase Shift Shifter module's soft *Phase Adjust* control to align the waveforms.

50. Use the Amplifier module's soft *Gain* control to set the stolen message to as close to the recovered message's amplitude as you can obtain.

    Note: Making the two signals exactly the same amplitude will allow the message component on the demodulator's output to be completely nulled at the output of the Adder module in the next few steps.

51. Modify the scope's connections to the set-up as shown in Figure 21 below.

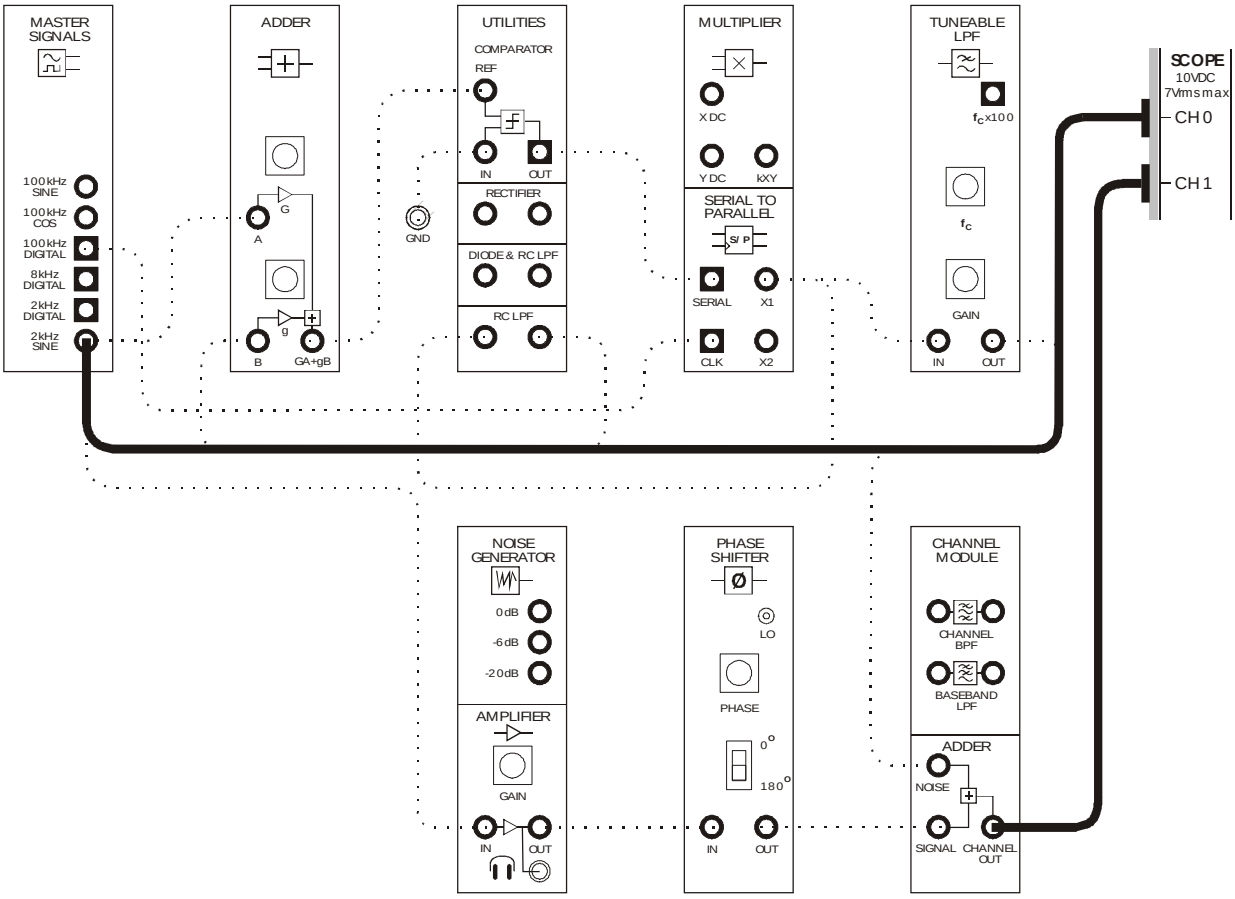

Figure 21

The scope's new connections to the set-up in Figure 21 can be represented by the block diagram in Figure 22 below.

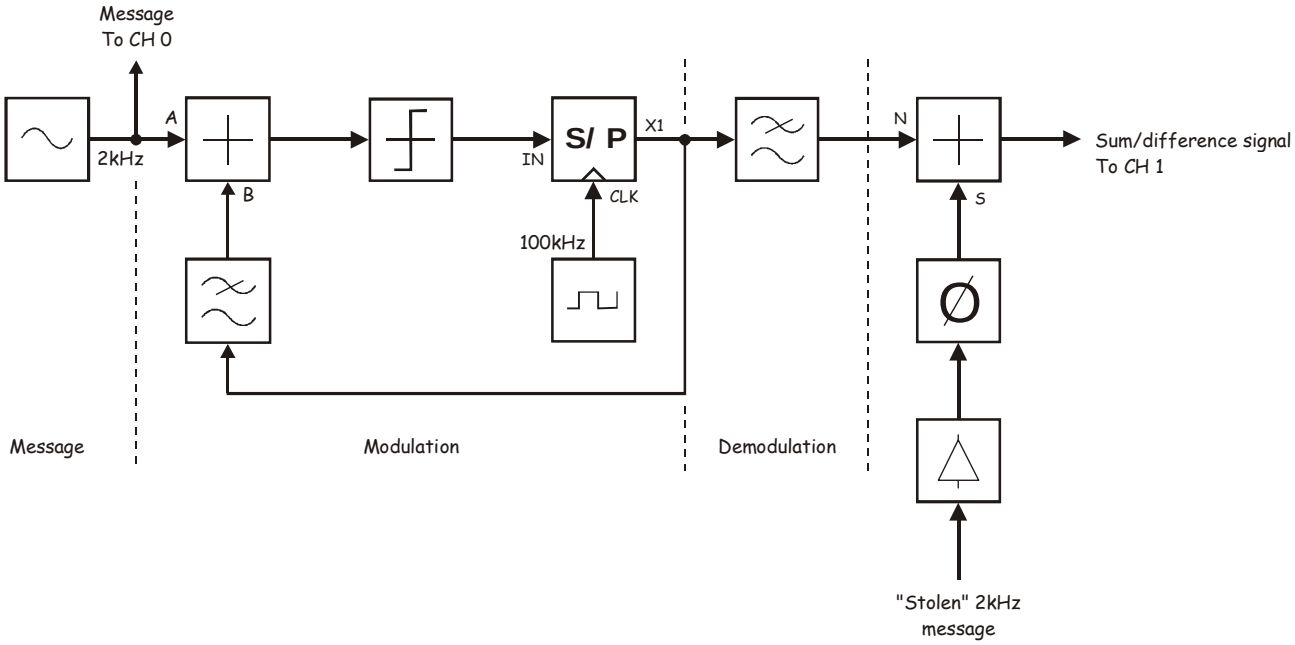

Figure 22

52. Vary the Phase Shifter module's soft *Phase Adjust* control left and right.

    Note: As you do this, you'll vary the phase relationship between the signal on the demodulator's output and the stolen message. Importantly, when the phase relationship between these two signals is 180°, they completely cancel each other out (as long as their amplitudes are the same).

53. Adjust the Phase Shifter module's soft *Phase Adjust* control until you obtain the smallest RMS output voltage from the Adder module.

    Note: If this is a little tricky because the smallest output occurs when this control is at or near the end of its travel, try switching the Phase Shifter module's soft *Phase Change* control to the *180°* position

54. Tweak the Amplifier module's soft *Gain* control a little to see if you can make the Adder module's output even smaller.

    Note: This fine-tune's the stolen message's amplitude to ensure that it's as close to the recovered message's amplitude as possible.

Once you have nulled the message component on the demodulator's as much as possible, the signal on Adder module's output is now the combination of all the sinewaves on the output of the Tuneable Low-pass Filter (the delta demodulator) minus the copy of the message. In other words, these are the elements on the filter's output that distort and add noise to the recovered message. This "noise and distortion signal" can be used to determine the delta modulator-demodulator system's SNDR.

55. Record the RMS noise and distortion signal voltage in Table 1 below.

56. Calculate and record the SNDR figure using the equation:

$$SNDR = \frac{S+N}{N}$$

57. Convert the SNDR figure to decibels and record this also.

Table 1

Signal on the demodulator's o/p	
Noise & Distortion	
SNDR	
SNDR (in decibels)	

Question 8

What would you expect to happen to the SNDR figure if a cheaper filter (that is, one with a less steep slope) is used to recover the message? Explain your answer.



Ask the instructor to check your work before finishing.

Name: _____

Class: _____

17 - Delta-sigma modulation and demodulation

Experiment 17 – Delta-sigma modulation and demodulation

Preliminary discussion

Delta-sigma modulation (or ΔΣ–modulation) is another pulse modulation scheme that is an apparently simple variation of delta modulation.

Recall that the block diagram of a basic delta modulation looks like Figure 1 below.

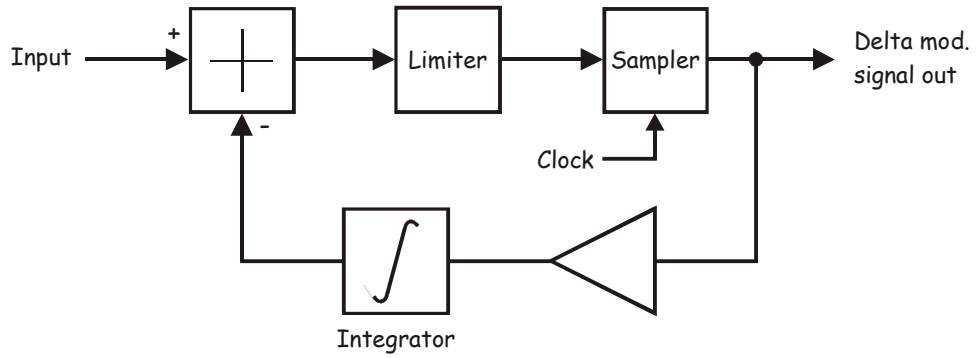

Figure 1

Delta-sigma modulation effectively swaps the Integrator and Sampler blocks as shown in Figure 2 below to achieve a pulse modulation with some advantages over delta modulation.

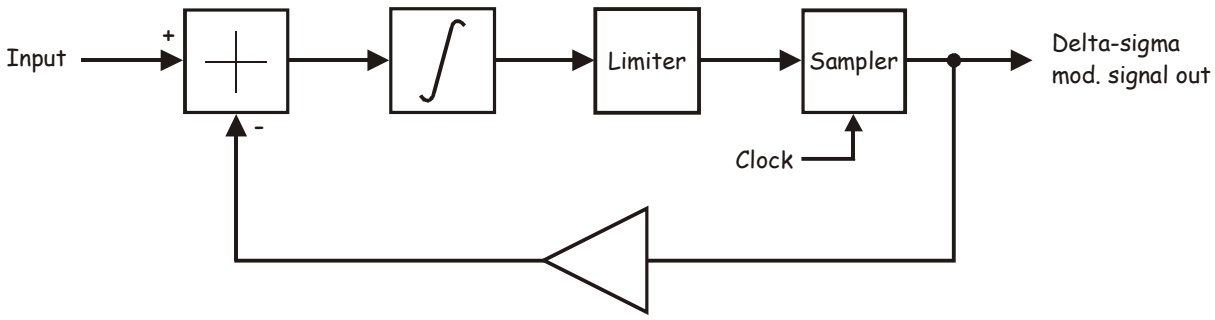

Figure 2

Importantly, where delta modulation quantises the difference between the message and the integral of the delta signal, delta-sigma modulation quantises the integral of the difference between the message and the delta-sigma signal. So, although the two modulation schemes look similar they're quite different mathematically. The result is a spectral composition that better suites low-pass filtering for demodulation because the quantisation noise occurs at higher frequencies.

The experiment

For this experiment you'll use the Emona DATEx to implement the delta-sigma modulation scheme. You'll then demodulate the delta-sigma signal using low-pass filtering.

It should take you about 30 minutes to complete this experiment.

Pre-requisites:

Experiments 1, 2 & 3 (Vol. 1): Intros to the NI ELVIS II, the Emona DATEx and SFP control
Experiment 13 (Vol. 1): Sampling and reconstruction
Experiment 10 (Vol. 2): Pulse code modulation and signal-to-noise distortion ratio
Experiment 16 (Vol. 2): Delta-sigma modulation and demodulation

Equipment

- Personal computer with appropriate software installed
- NI ELVIS II plus USB cable and power pack
- Emona DATEx experimental add-in module
- Two BNC to 2mm banana-plug leads
- Assorted 2mm banana-plug patch leads

Procedure

Part A – Setting up the delta modulator

Part A of this experiment gets you to implement the delta-sigma modulator using the Emona DATEx.

1. Ensure that the NI ELVIS II power switch at the back of the unit is off.

2. Carefully plug the Emona DATEx experimental add-in module into the NI ELVIS II.

3. Set the *Control Mode* switch on the DATEx module (top right corner) to *PC Control*.

4. Connect the NI ELVIS II to the PC using the USB cable.

   Note: This may already have been done for you.

5. Turn on the NI ELVIS II power switch at the rear of the unit then turn on its *Prototyping Board Power* switch at the top right corner near the power indicator.

6. Turn on the PC and let it boot-up.

7. Launch the NI ELVISmx software.

8. Locate the Adder module and set its soft *G* and *g* controls to the middle of their travel (which should have the arrowheads pointing to the 12 o'clock position).

9. Connect the set-up shown in Figure 3 below.

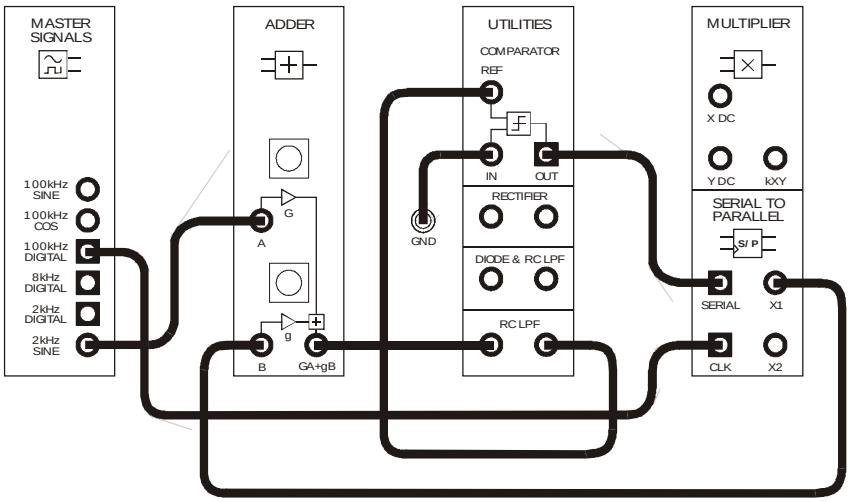

Figure 3

The set-up in Figure 3 can be represented by the block diagram in Figure 4 below. The Master Signals module's *2kHz SINE* output models the message. The remaining blocks implement the delta-sigma modulator.

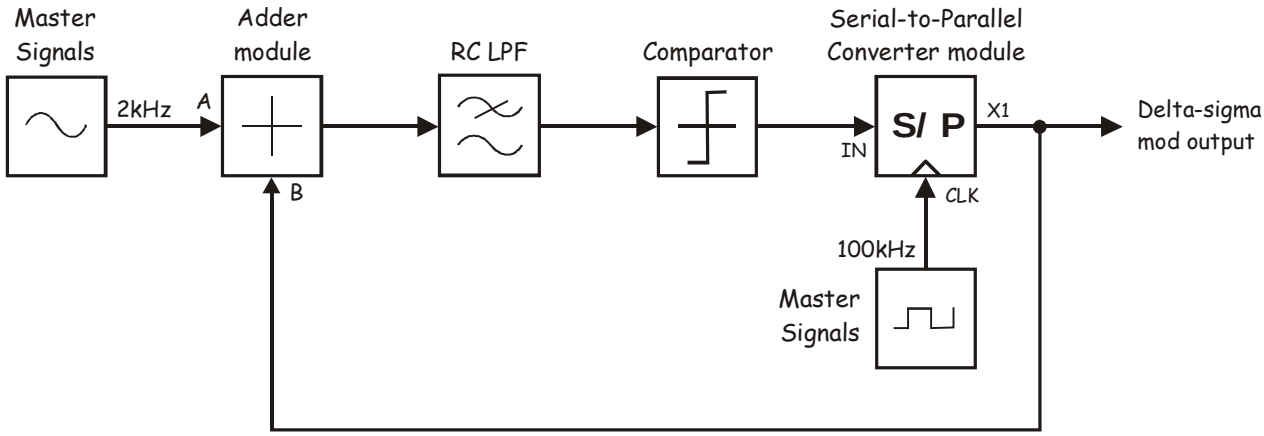

Figure 4

Relating this functional block diagram to the generic block diagram of a delta-sigma modulator in the preliminary discussion (Figure 2), the Utilities module's RC LPF models the Integrator, the Adder module implements the Summer, the Utilities module's Comparator implements the Limiter, and the Serial-to-Parallel Converter module models the Sampler with a 50kHz (effectively). Loop gain is provided and controlled by the Adder module.

10. Connect the scope's Channel 0 input to the set-up as shown in Figure 5 below.

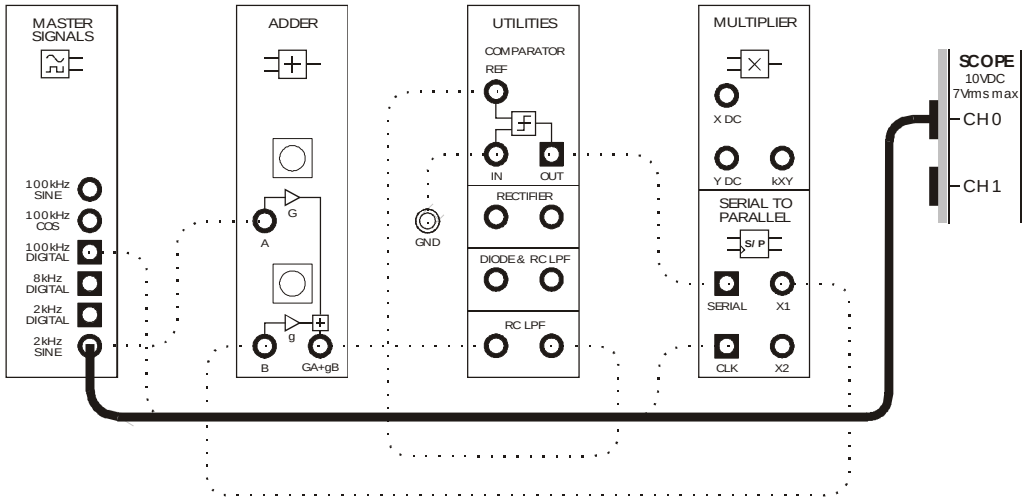

Figure 5

11. Launch and run the NI ELVIS II Oscilloscope.

12. Adjust the scope to view the message. Essential scope settings include:

    - *Timebase* to *200µs/div*
    - *Trigger Type* to *Edge*
    - *Trigger Source* to *CH 0*

13. Determine the message signal's peak-to-peak amplitude and make a note of the value.

14. Modify the set-up as shown in Figure 6 below.

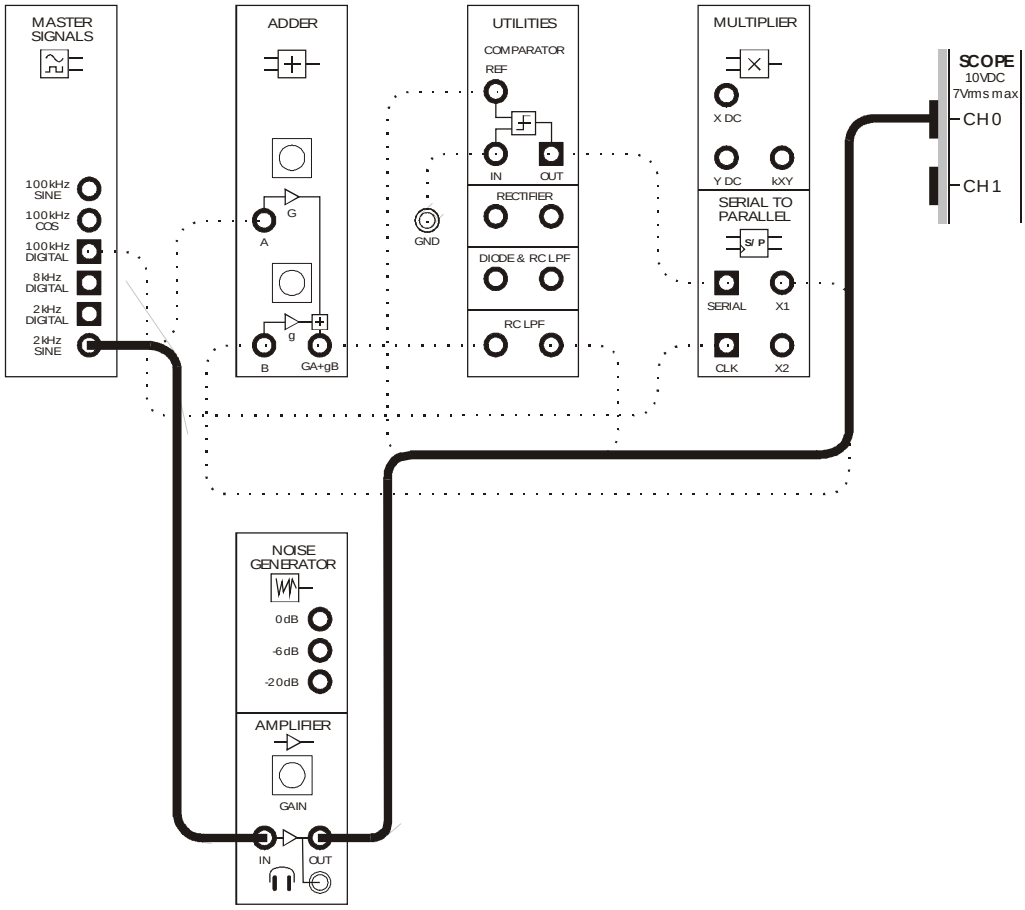

Figure 6

15. Use the Amplifier module's soft *GAIN* control to set its output to the same amplitude that you measured at Step 7.

Ask the instructor to check your work before continuing.

16. Connect the scope's Channel 1 input to the set-up as shown in Figure 7 below.

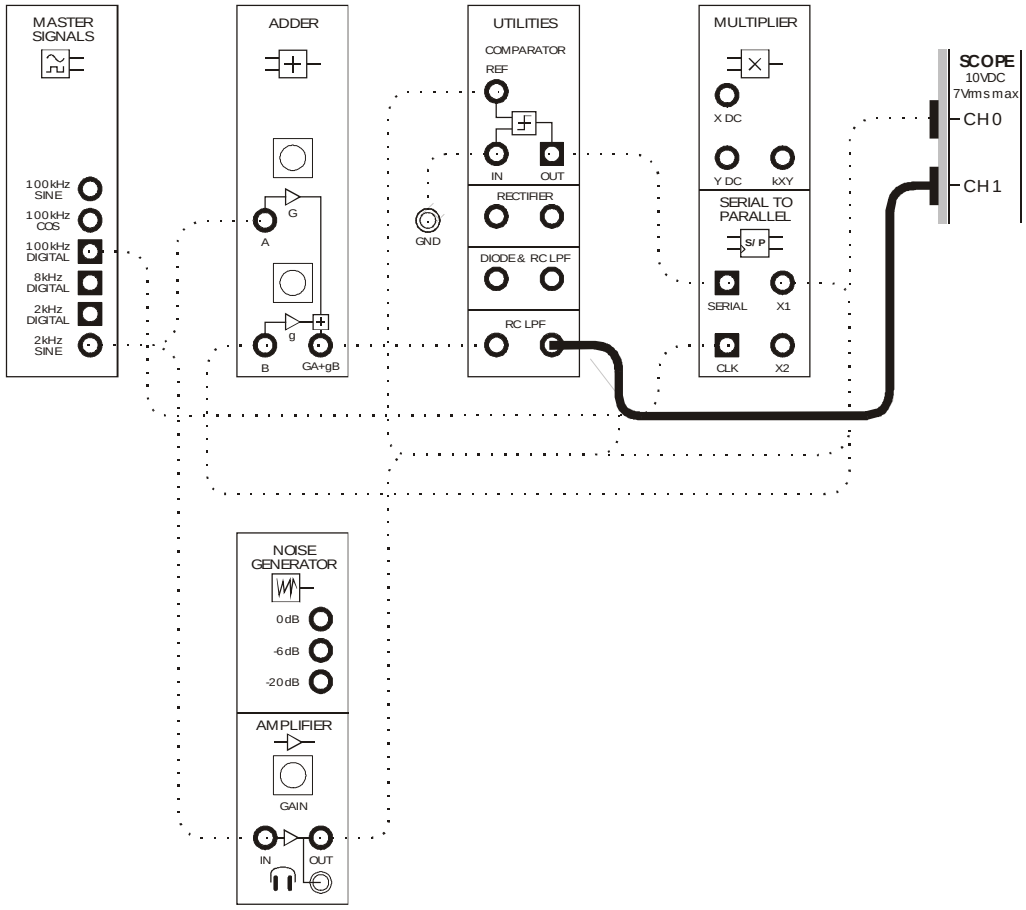

Figure 7

The scope's connections to the set-up can be represented by the block diagram in Figure 8 on the next page. Notice that the Amplifier module isn't shown. This is because it's not contributing to the implementation of delta-sigma modulation. Instead, it's being used to invert the message so that it's in phase with the Integrator's output and the two signals can be conveniently compared.

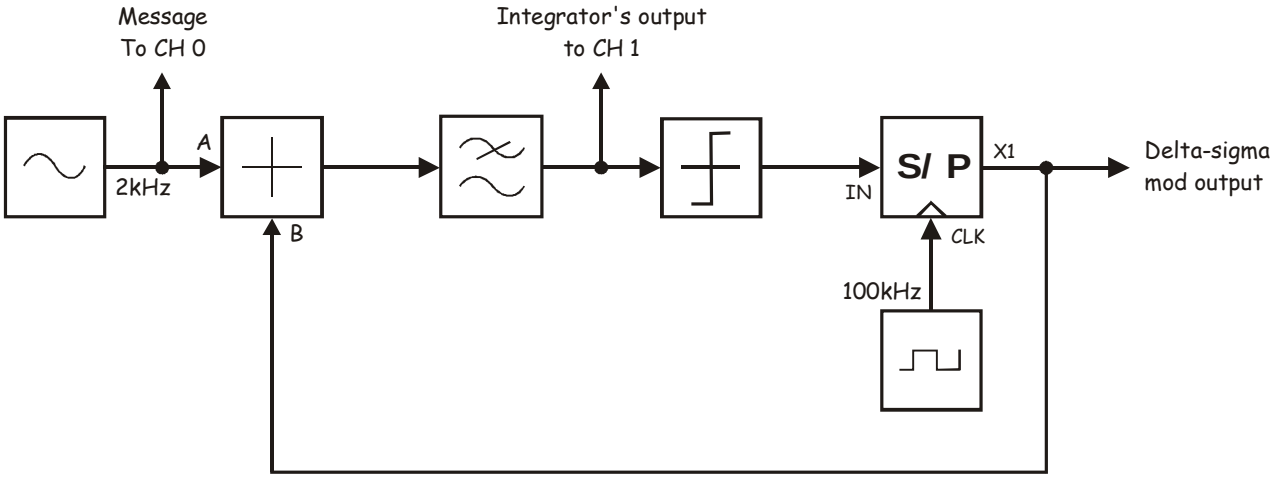

Figure 8

17. Check that the scope's Channel 0 *Scale* control is set to the *1V/div* position.

18. Set the scope's Channel 1 *Scale* control to the *0.5V/div* position.

19. Enable the scope's Channel 1 input to observe the signal on the RC LPF's output as well as the message.

    Note: Remember that the RC LPF is being used to model the Integrator.

At first glance, the Integrator's output should seem similar to the same signal in a delta modulator. However, look closely at the Integrator's output when the message changes direction. Can you see a difference?

Ask the instructor to check your work before continuing.

20. Modify the scope's Channel 1 connection to the set-up as shown in Figure 9 below.

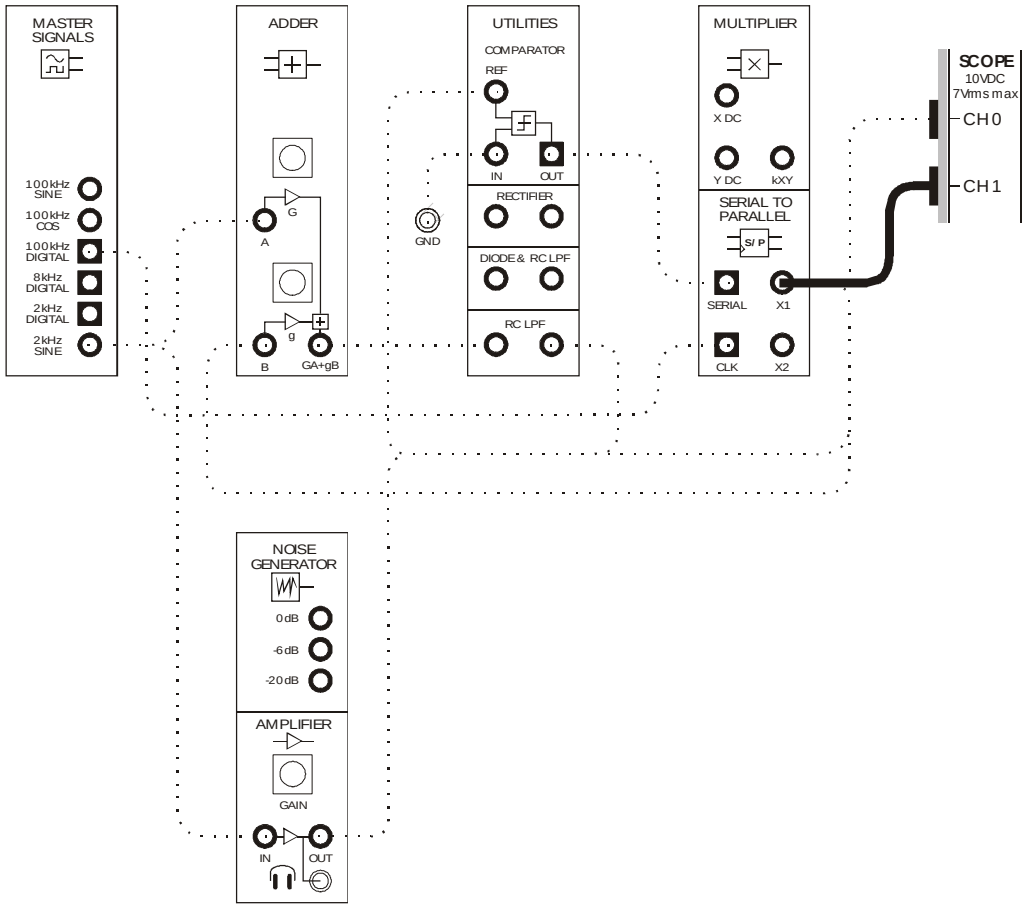

Figure 9

The new scope connection to the set-up can be represented by the block diagram in Figure 10 on the next page.

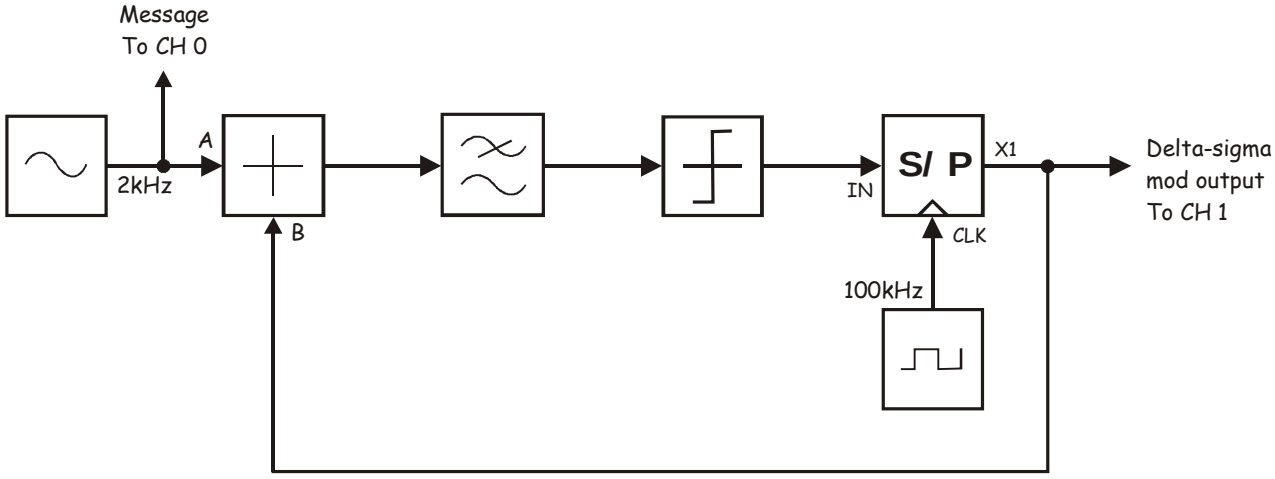

Figure 10

21. Set the scope's Channel 1 *Scale* control to the *1V/div* position.

22. Separate the signals by setting the scope's Channel 0 *Vertical Position* control to +2V and its Channel 1 *Vertical Position* control to -2V.

Question 1
How does the pulse train on the delta-sigma modulator's output compare to that of the delta modulator?

Question 2
What's different about the delta-sigma and delta signals in terms of their spectral composition?

Question 3
What's the same about the delta-sigma and delta signals in terms of their spectral composition?

Question 4
How can the message be recovered?



Ask the instructor to check your work before continuing.

Part B – Delta-sigma demodulation

Recall that delta-sigma modulation produces a pulse train with a spectral composition that includes a copy of the message signal. It's possible to recover the message using low-pass filtering and Part B gets you to do this.

23. Locate the Tuneable Low-pass Filter module and set its soft *Gain* control to the middle of its travel.

24. Turn the Tuneable Low-pass Filter module's soft *Cut-off Frequency Adjust* control fully clockwise.

25. Modify the set-up as shown in Figure 11 below.

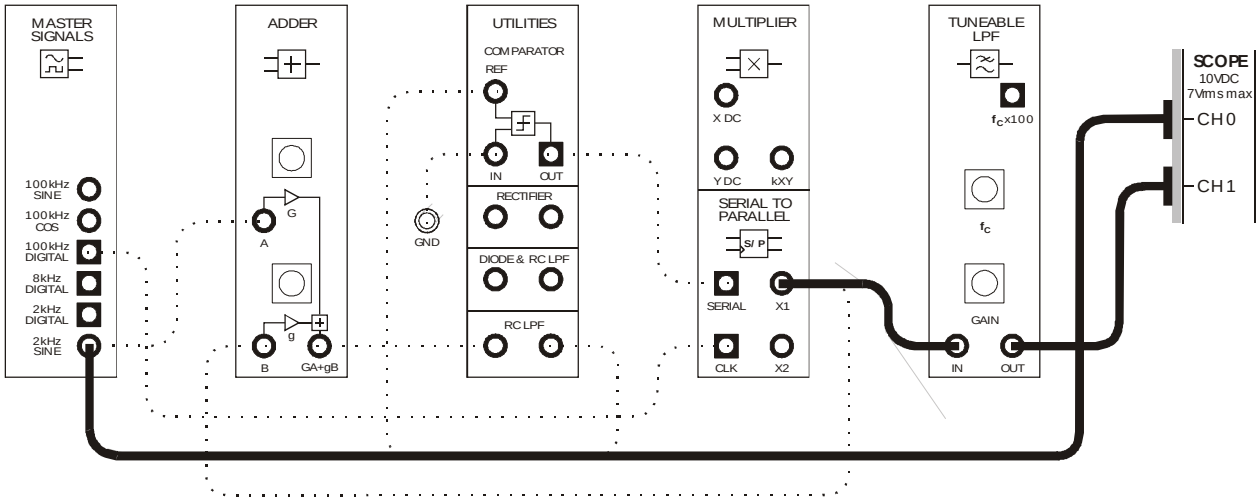

Figure 11

The entire set-up including the modification in Figure 11 can be represented by the block diagram in Figure 12 below. The Tuneable Low-pass Filter module is used to demodulate the delta-sigma signal and recover the 2kHz message.

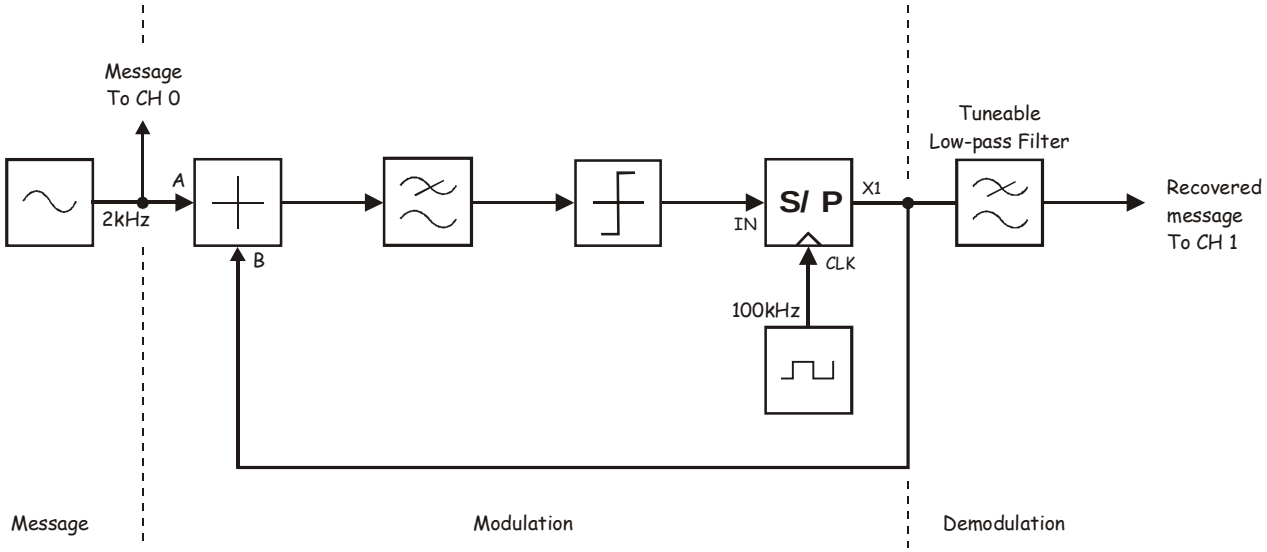

Figure 12

26. Slowly reduce the Tuneable Low-pass Filter module's cut-off frequency until the message has been recovered (ignoring phase shift).

Ask the instructor to check your work before continuing.

Now let's see what your hearing tells you…

27. Turn the Tuneable Low-pass Filter module's soft *Cut-off Frequency Adjust* control fully clockwise again.

28. Modify the set-up as shown in Figure 13 below.

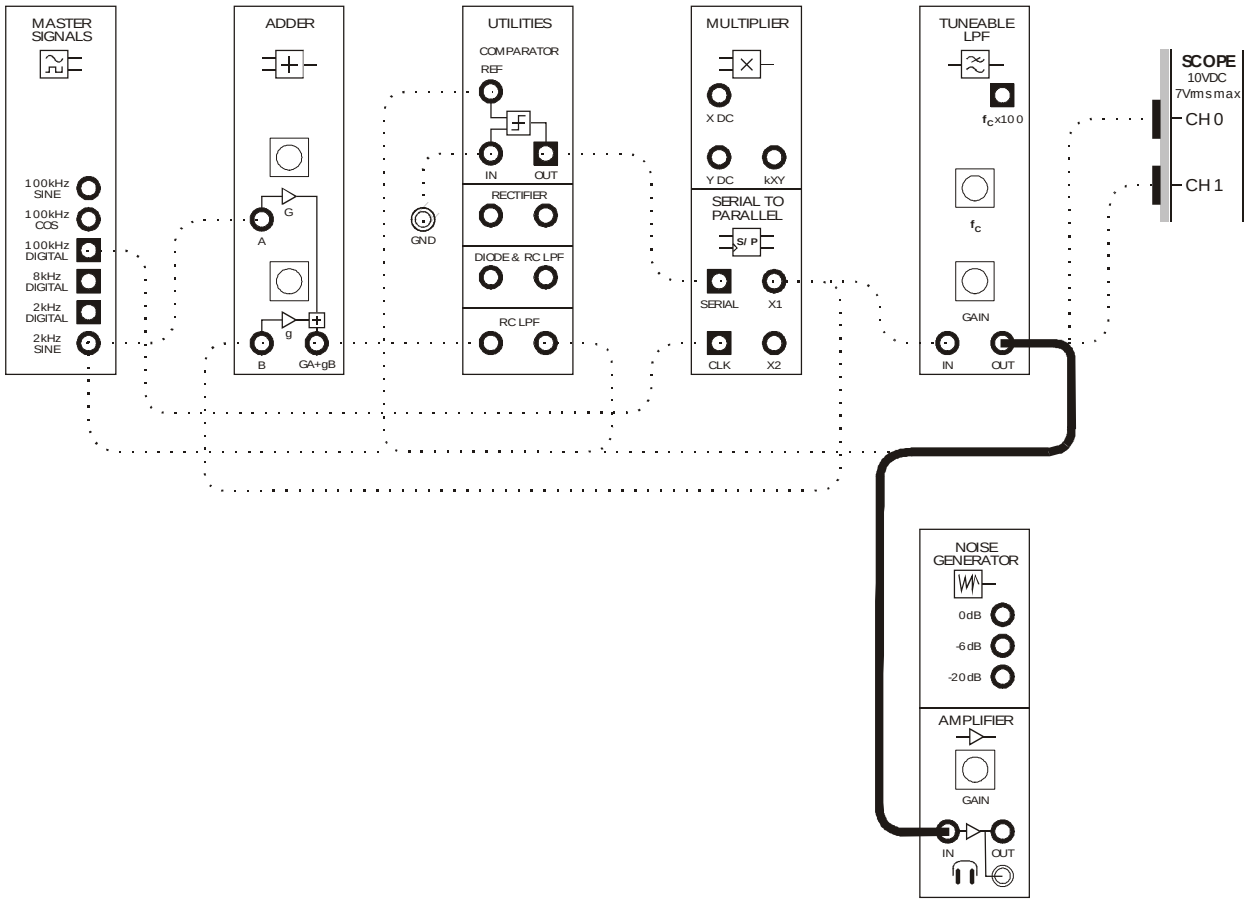

Figure 13

29. Turn the Amplifier module's soft *Gain* control fully anti-clockwise.

30. Without wearing the headphones, plug them into the Amplifier module's headphone socket.

31. Put the headphones on.

32. Increase the Amplifier module's gain until you can comfortably hear the Tuneable Low-pass Filter module's output.

    Note: You should be able to hear the copy of the message (ie the 2kHz tone) plus the other frequency components that make up the delta-sigma signal's spectral composition (up to about 15kHz which is the Tuneable Low-pass Filter module's maximum cut-off frequency).

33. Slowly reduce the Tuneable Low-pass Filter module's cut-off frequency until the message has been recovered and it sounds like these other frequency components are minimised or completely removed.

Question 5

Why does delta-sigma modulation perform better than delta modulation when simple low-pass filtering is used to recover the message?



Ask the instructor to check your work before finishing.

Name: _____

Class: _____

18 - FM generation using the harmonic multiplier method

Experiment 18 – FM generation using the harmonic multiplier method

Preliminary discussion

You'll know from your studies that *angle modulation* includes phase and frequency modulation (PM and FM). As their names imply, frequency and phase modulation vary the carrier's frequency or phase in response to the message's amplitude.

Importantly though, you'll also know that varying the phase of any signal necessarily involves varying its frequency and vice versa. So, phase modulating a carrier simultaneously frequency modulates it (and vice versa). This method of generating an FM signal is called *indirect FM* and is preferred to some direct FM methods (like the VCO) because a crystal oscillator can be used to generate the carrier. This improves the carrier frequency's accuracy and stability without the need for AFC circuitry.

Experiment 4 demonstrates the mathematical implementation of a classic PM generation technique called the Armstrong modulator (named after its inventor). The discussion above makes it clear that the Armstrong modulator can be used to for indirect FM generation. However, the practical implementation of the Armstrong modulator is problematic because the carrier frequency deviation (Δfc) is not as good as for direct FM methods and this has noise performance implications.

To explain, FM has better noise performance than AM for two fundamental reasons. First, by necessity, FM receivers are designed to respond to frequency variations. But recall that electrical noise is manifest as amplitude variations and so these can be, and are, removed at the receiver using a *limiter*. Second, although noise-induced amplitude variations in the carrier cause its phase to vary as well (which of course simultaneously translates to frequency variations that the receiver can demodulate), FM has an inherent noise-reduction ability (not explained here). Importantly, this noise-reduction ability is a function of the FM signal's modulation index (m). The greater the modulation index, the better the inherent noise-reduction. Conversely, the lower the modulation index, the poorer the noise-reduction and so this is the weakness of the Armstrong modulator.

A quick look at the equation for calculating modulation index ($m = \Delta fc \div fm$) gives us an obvious solution to this problem – Decrease the maximum allowable message frequency (fm). While this would increase the modulation index and hence improve the system's noise performance, it would do so at the expense of fidelity (where the message consists of frequencies greater than that allowed).

The better solution involves leaving the maximum allowable message frequency unchanged and using the Armstrong modulator (with its poor deviation performance) to generate an FM signal on a carrier that is a sub-multiple of the desired carrier frequency (eg 30MHz instead of 90MHz). The resulting FM signal is then multiplied by the appropriate amount to obtain the required carrier frequency (eg by 3 based on the figures above). Importantly, this widens the FM signal's spectrum in the same way that increasing its carrier deviation does (and so it's also known as *deviation multiplication*). In turn, this increases its modulation index and hence the FM signal's noise performance.

The experiment
For this experiment you'll use the Emona DATEx to implement a contemporary method of frequency modulation using Armstrong's modulator and harmonic multiplication. Once done, you'll use the FM signal's spectrum to determine its modulation index.

It should take you about 40 minutes to complete this experiment.

Pre-requisites:
Experiments 1, 2 & 3 (Vol. 1): Intros to the NI ELVIS II, the Emona DATEx and SFP control
Experiment 6 (Vol. 1): DSBSC modulation (optional)
Experiment 1 (Vol. 2): AM (method 2) and product detection of AM signals (desirable)

Equipment

- Personal computer with appropriate software installed
- NI ELVIS II plus USB cable and power pack
- Emona DATEx experimental add-in module
- Two BNC to 2mm banana-plug leads
- Assorted 2mm banana-plug patch leads
- Table of Bessel Functions (of the first kind)

Procedure

Part A – Generating an FM signal using Armstrong's modulator and harmonic multiplication

1. Ensure that the NI ELVIS II power switch at the back of the unit is off.

2. Carefully plug the Emona DATEx experimental add-in module into the NI ELVIS II.

3. Set the *Control Mode* switch on the DATEx module (top right corner) to *PC Control*.

4. Connect the NI ELVIS II to the PC using the USB cable.

   Note: This may already have been done for you.

5. Turn on the NI ELVIS II power switch at the rear of the unit then turn on its *Prototyping Board Power* switch at the top right corner near the power indicator.

6. Turn on the PC and let it boot-up.

7. Launch the NI ELVISmx software.

8. Launch and run the NI ELVIS II Function Generator VI.

9. Adjust the function generator's soft controls for an output with the following specifications:

   - Waveshape: Sine
   - Frequency: 33.333kHz
   - Amplitude: 4Vpp
   - DC Offset: 0V

10. Launch the DATEx soft front-panel (SFP) and check that you have soft control over the DATEx board.

11. Locate the Adder module on the DATEx SFP and set its soft *G* and *g* controls to about the middle of their travel (the exact position isn't critical at this stage).

12. Locate the Phase Shifter module on the DATEx SFP and set its soft *Phase Change* control to the *0°* position.

13. Set the Phase Shifter module's soft *Phase Adjust* control to about the middle of its travel.

14. Connect the set-up shown in Figure 1 below.

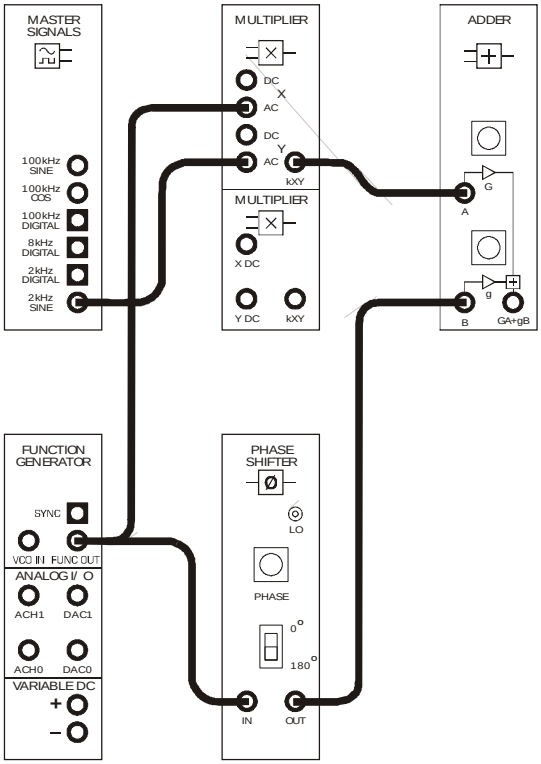

Figure 1

This set-up can be represented by the block diagram in Figure 2 on the next page. It multiplies a 2kHz sinewave message with a 33.333kHz carrier. This produces 31.333kHz and 35.333kHz sinewaves on the Multiplier module's output (in other words, a DSBSC signal). Separate to this, the carrier is phase shifted then simply added to the Multiplier module's output.

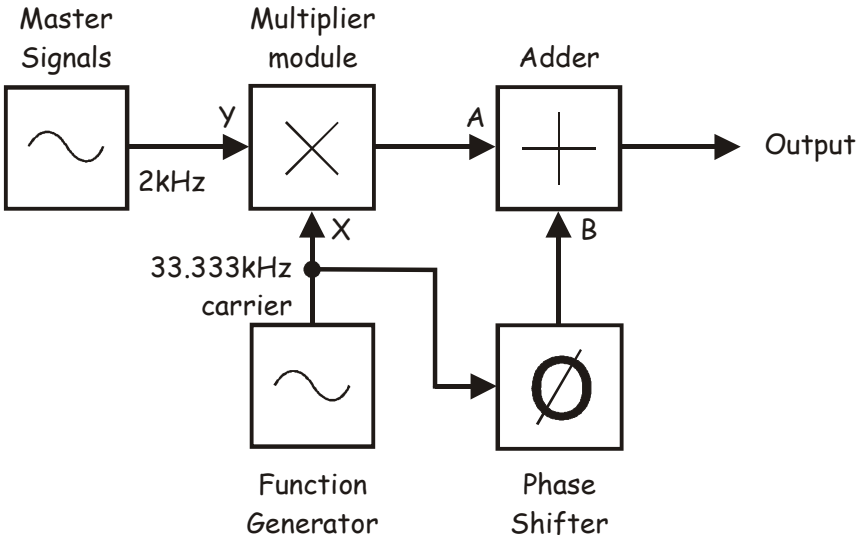

Figure 2

15. Connect the NI ELVIS II Oscilloscope to the set-up as shown in Figure 3 below.

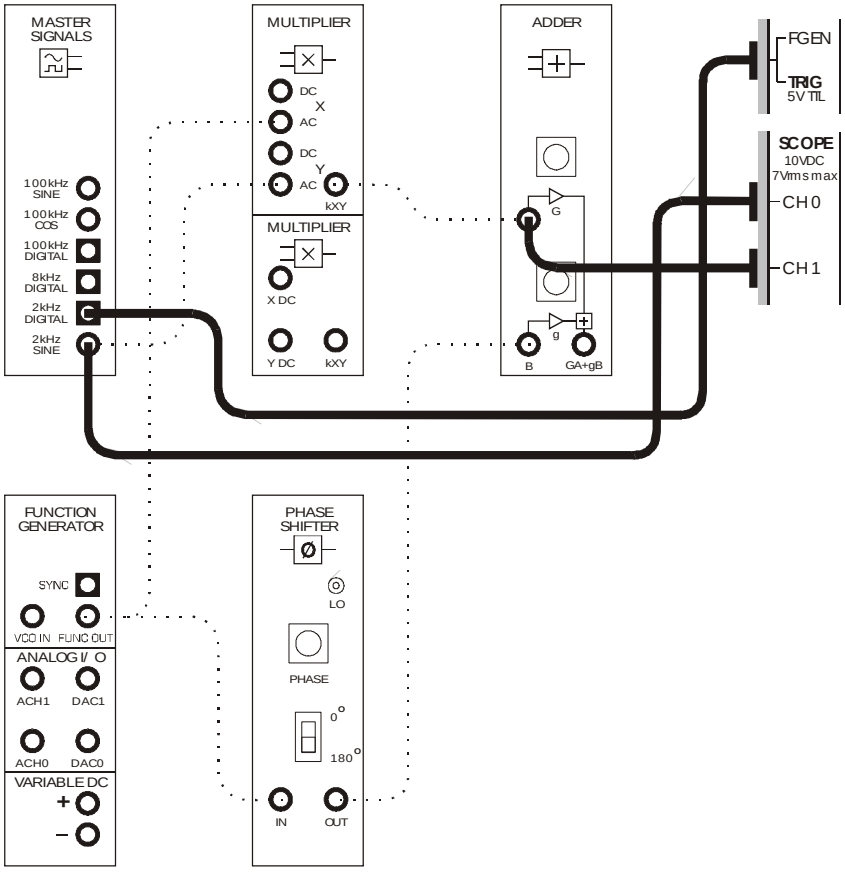

Figure 3

The scope's connections to the set-up in Figure 3 are shown in Figure 4 below. The scope's external trigger input is used to help obtain a stable display.

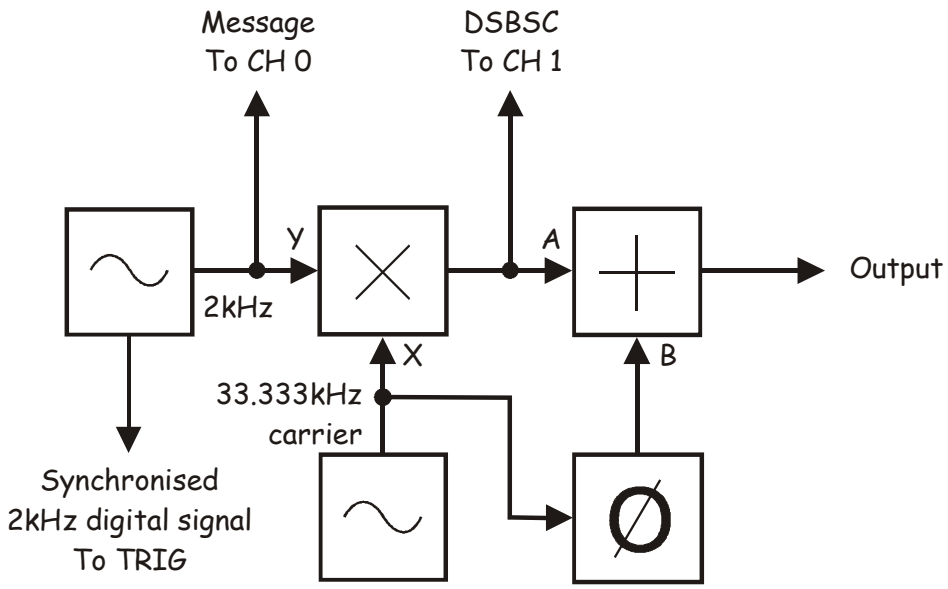

Figure 4

16. Launch and run the NI ELVIS II Oscilloscope.

17. Adjust the scope to view the message and the signal on the Adder module's output. Essential scope settings include:

    - Channel 1 *Scale* to *1V/div* and Channel 2 *Scale* to *2V/div*
    - *Coupling* for both channels to *AC*
    - *Timebase* to *200µs/div*
    - *Trigger Type* to *Digital*

18. Verify that the Multiplier module's output is a signal with alternating halves of its envelope forming a copy of the message (in other words, a DSBSC signal).

Ask the instructor to check your work before continuing.

19. Modify the scope's connection to the set-up as shown in Figure 5 below.

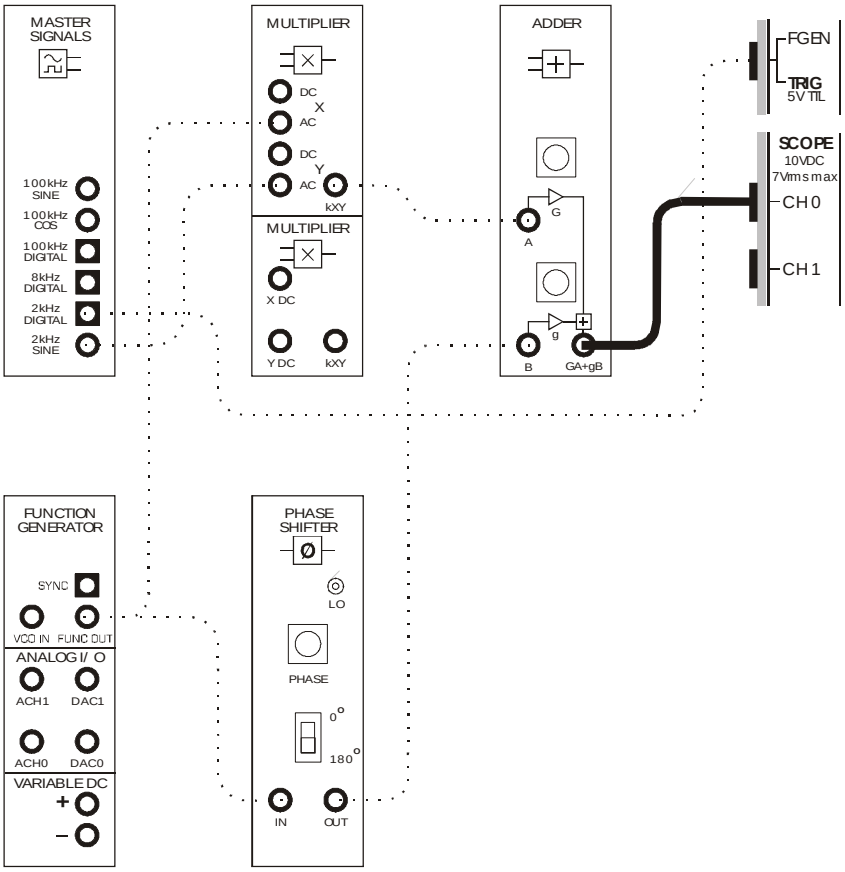

Figure 5

The scope's new connection to the set-up in Figure 5 is shown in Figure 6 below. The scope's Channel 1 input has been removed and its Channel 0 input is connected to the Adder module's output in preparation for the next set of adjustments.

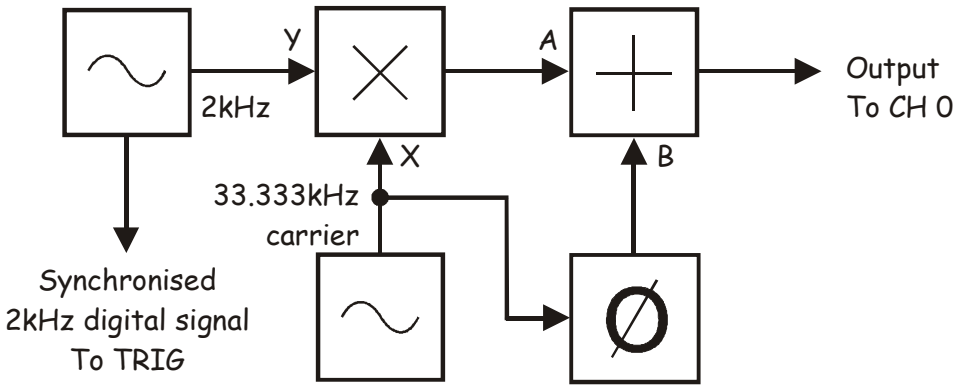

Figure 6

20. Adjust the scope's settings as follows:

    - Channel 1 is disabled
    - Channel 0 *Scale* control to *2V/div*

21. Observe the Adder module's output using the scope.

    Note: You'll notice that the signal looks like an over-modulated AM signal.



Ask the instructor to check your work before continuing.

The next part of this experiment gets you obtain a 90° degree phase relationship between the combined 31.333kHz & 35.333kHz sinewaves and the 31.333kHz carrier (effectively turning the signal on the Adder module's output into quadrature amplitude modulation).

22. Disconnect the patch lead to the Adder module's *A* input.

    Note: This removes the 31.333kHz and 35.333kHz sinewaves (the DSBSC signal) from the Adder module's output.

23. Set the scope's Channel 0 *Scale* control to *1V/div*.

24. Adjust the Adder module's soft *g* control for an output of 4Vp-p.

    Note: There's probably no need to adjust the scope's *Timebase* control to do this.

25. Reconnect the patch lead to the Adder module's *A* input.

26. Disconnect the patch lead to the Adder module's *B* input.

    Note: This removes the 33.333kHz carrier from the Adder module's output.

27. Adjust the Adder module's soft *G* control for an output of 4Vp-p.

28. Reconnect the patch lead to the Adder module's *B* input.

29. Carefully adjust the Phase Shifter module's soft *Phase Adjust* control to make all of the peaks on the upper (or lower) envelope the same height.

    Note: Once done, "quadrature" has been achieved – That is, there is a 90° degree phase relationship between the combined 31.333kHz & 35.333kHz sinewaves and the 31.333kHz carrier. The reason these adjustments achieve quadrature is not explained here (but is explained in Experiment 4).



Ask the instructor to check your work before continuing.

When quadrature is obtained in this way, the modulation index (*m*) of the signal on the Adder module's output is 1. This is too great for the purpose of this experiment so the following instructions get you to reduce *m* to 0.5.

30. Disconnect the patch lead to the Adder module's *B* input.

    Note: This removes the added carrier from the Adder module's output again.

31. Adjust the Adder module's soft *G* control for an output of 2Vp-p.

32. Reconnect the patch lead to the Adder module's *B* input.

    Note: Once done, you'll probably find that the envelopes vary in amplitude only slightly.



Ask the instructor to check your work before continuing.

33. Suspend the scope's operation by clicking on its *Stop* control once.

    Note: The scope's display should freeze and its hardware has been deactivated. This is a necessary step as the scope and signal analyzer share hardware resources and so they cannot be operated simultaneously.

34. Launch and run the NI ELVIS II Dynamic Signal Analyzer VI.

35. Adjust the signal analyzer's controls as follows:

    Input Settings

    - *Source Channel* to *SCOPE CH 0*
    - Voltage Range to ±10V

    FFT Settings

    - *Frequency Span* to *50,000*
    - *Resolution* to *3200*
    - *Window* to *7 Term B-Harris*

    Averaging

    - *Mode* to *RMS*
    - *Weighting* to *Exponential*
    - *# of Averages* to *3*

    Trigger Settings

    - *Type* to *Immediate*

    Frequency Display

    - *Units* to *dB*
    - *Mode* to *RMS*
    - *Scale* to *Auto*
    - *Cursors On* box unchecked (for now)

36. Activate the signal analyzer's cursors and use *C1* to locate the sinewaves at the following frequencies: 31.333kHz, 33.333kHz and 35.333kHz.

You may recognise this pattern of sinewaves as the classic spectral composition of an AM signal (for a 33.333kHz carrier modulated by a 2kHz sinusoidal message). However, remember that the signal on the Adder module's output is quadrature amplitude modulation (QAM) - The signal analyzer cannot show the 90° phase relationship between the carrier and its sidebands.



Ask the instructor to check your work before continuing.

Passing the Adder module's output signal through a non-linear circuit such as an amplitude limiter converts the signal's spectrum in the region about the carrier frequency (33.333kHz in this case) to a good approximation of a 33.333kHz carrier that is phase modulated by its 2kHz sinusoidal message (provided the modulation index of the QAM signal is not too great). Thus, the amplitude limited signal can be readily converted to PM (and, indirectly, FM) using a band-pass filter with the same centre frequency as the original carrier. In fact, this technique is used to generate a (narrow-band) PM signal using a 100kHz carrier in Experiment 4.

Importantly, the non-linear processing of the amplitude limiter also produces equally good approximations of an FM signal about whole odd-number multiples of the carrier (that is, at 100kHz, 167kHz, 233kHz and so on in this case). In other words, the carrier frequency and the FM signal's sidebands are multiplied. Moreover, the bandwidth of these reproductions is wider for each successive carrier-multiple. The next part of the experiment demonstrates this.

37. Set the signal analyzer's *Frequency Span* to *525kHz*.

38. Modify the set-up as shown in Figure 7 below.

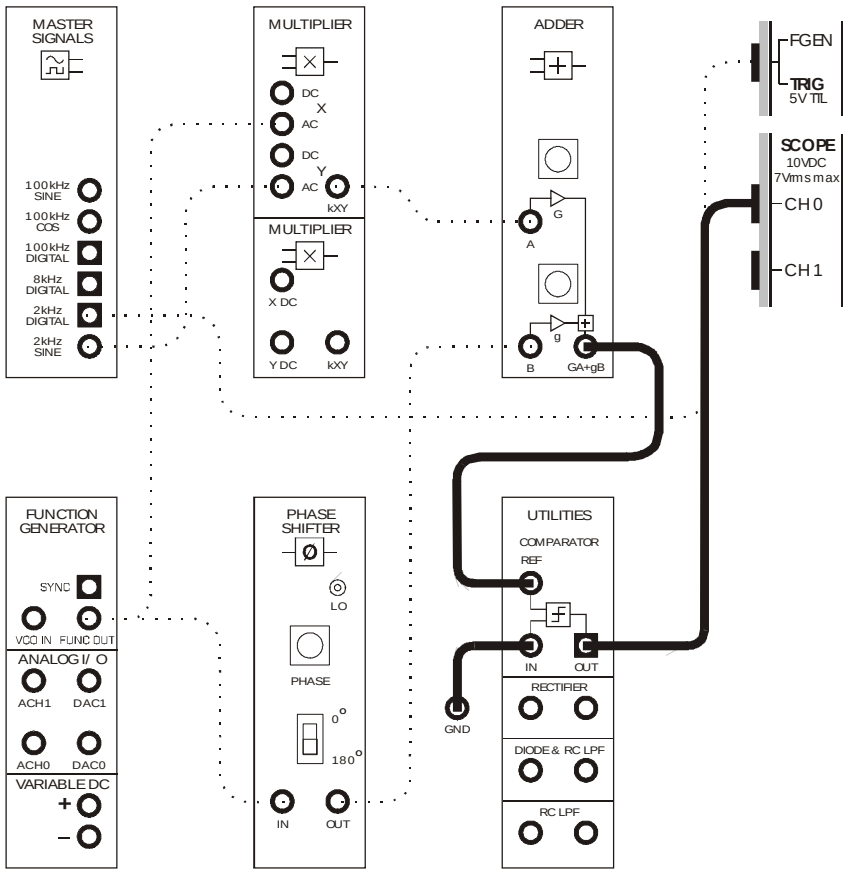

Figure 7

The set-up in Figure 7 can be represented by the block diagram in Figure 8 below. The Adder module's quadrature amplitude modulated output signal is fed to the input of the Comparator wired as an amplitude limiter.

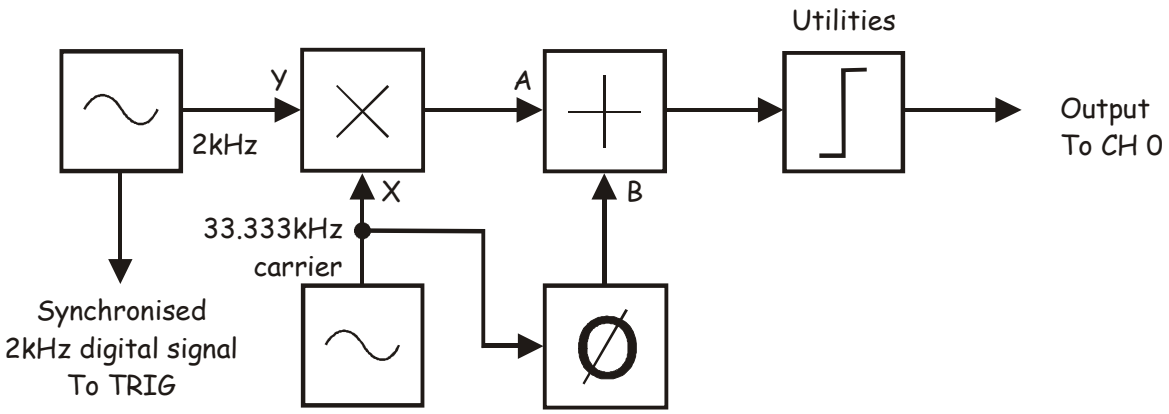

Figure 8

39. Examine the signal's spectrum closely.

Question 1
How many "clusters" of FM spectrum approximations are there in the signal analyzer's 525kHz span?

Question 2
The notional carrier frequency of the first four of these FM clusters have been calculated for you and are: 33.333kHz, 100kHz, 167kHz and 233kHz. Calculate the notional carrier frequency of the remaining clusters up to 525kHz.

Ask the instructor to check your work before continuing.

Question 3
In what way are these FM spectrum clusters different to each other (apart from their notional carrier frequency)?

Question 4
In relation to your answer to Question 3, an increase in what attribute of an FM signal would produce the same effect?

Question 5
What circuit must be used to isolate one of these FM spectrum clusters to obtain a signal with the same spectrum as a single carrier that is FM modulated by a 2kHz sinusoidal message?



Ask the instructor to check your work before continuing.

As you should have identified in your answer to Question 6, a band-pass filter (BPF) can be used to isolate one of the FM spectrum clusters to obtain a signal with a spectrum that is a good approximation to that of a single carrier that is FM modulated by a 2kHz sinusoidal message. The next part of this experiment lets you do this using the 100kHz Channel BPF.

40. Set the signal analyzer's *Scale* control (in the *Scale Settings* area) to *Manual*.

41. Set the signal analyzer's *Maximum* scale value to *10.0* (dB) and the *Minimum* to *-40.0* (dB).

    Note: Making this adjustment forces the signal analyzer to only show sinewaves that are -40dB or greater (relative to the fundamental).

42. Suspend the signal analyzer's VI by clicking on its *Stop* button once.

43. Modify the set-up as shown in Figure 9 below.

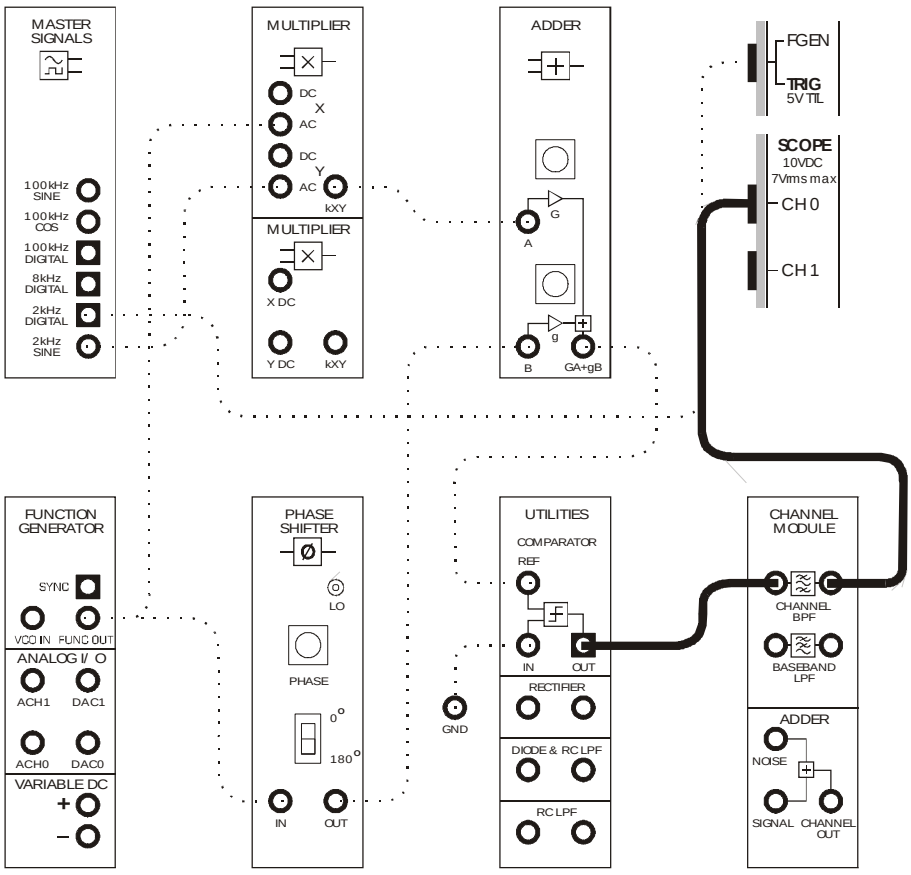

Figure 9

This set-up can be represented by the block diagram in Figure 10 on the next page. The Channel BPF is used recover just one of the FM spectrum clusters.

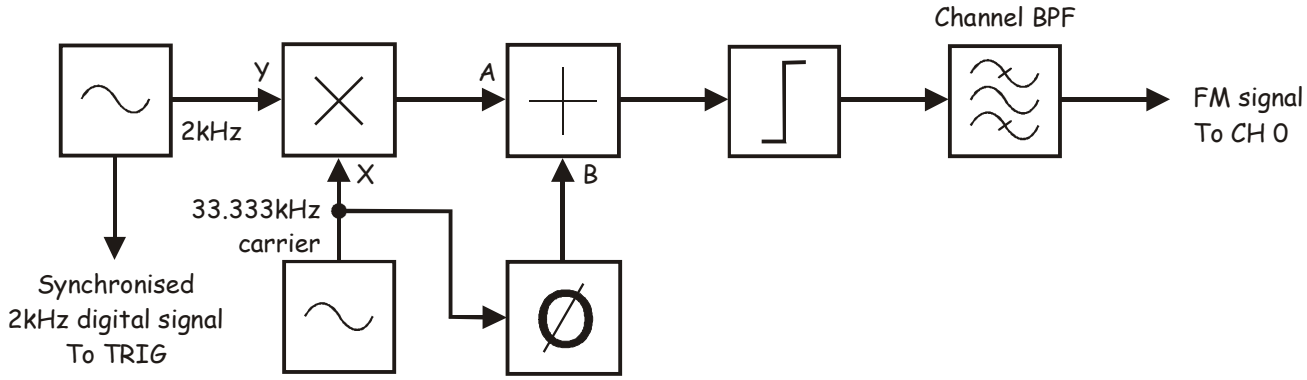

Figure 10

44. Restart the signal analyzer's VI by clicking on its *Run* button once.

    Note: Once done, you should observe a dramatic reduction in the signal's spectral complexity.

45. Set the signal analyzer's *Frequency Span* to *125kHz*.

Question 6
The signal on the Channel BPF's output is the same as a carrier that is FM modulated by a 2kHz sinusoidal message. What is the frequency of this notional carrier?

_____

Question 7
The carrier is referred to here as being "notional" because at no stage has a sinewave at this frequency been used to generate an FM signal. Briefly explain how multiplication obtained this carrier frequency.

_____

_____

Ask the instructor to check your work before continuing.

Part B – Determining the FM signal's modulation index

At first glance, the choice to have the signal analyzer display only the sinewaves in the FM signal that are -40dB or greater may seem arbitrary. Why not choose -30dB or -50dB? To answer that question, recall that the theoretical bandwidth of an FM signal is infinite. That is, the unmodulated carrier's power is shared between an infinite number of side-frequency pairs. However, the majority of the sinewaves in an FM signal's spectrum are made up of only minute amounts of the unmodulated carrier's power and need not necessarily be transmitted. That being the case, for practical purposes, an FM signal's bandwidth is said to include only the "significant" sinewaves.

But what counts as "significant"? That varies depending on the amount of distortion considered acceptable for a particular FM communications application. For voice communications, significant sinewaves may be only those consisting of 5% or more of the original unmodulated carrier's power. However, for high fidelity systems like FM radio, significant sinewaves are said to be those consisting of much smaller amounts of the original unmodulated carrier's power.

The classic table of Bessel functions (of the first kind) that allows electronics and communications students to determine the number of side frequencies in an FM signal and their proportion of the unmodulated carrier's power is based on a significance of 1%. That is, it shows all the side-frequencies made up of 0.01 or more of the unmodulated carrier's power. Relating this back to the question at the top of this page, when 1% is converted to a ratio then to a voltage decibel, the figure is -40dB.

So, the choice of -40dB here is a good one and allows us to use the Bessel table to work backwards to determine the FM signal's modulation index. Part B of the experiment gets you to do this.

46. Use the cursor *C1* to locate the FM signal's carrier frequency.

47. Count the number of side frequencies above **or** below the 100kHz carrier frequency and let this number equal "n".

48. Locate the row in the table of Bessel functions that has J_n side frequencies.

    Note: You'll probably find that there are two.

49. To determine which of the row of values is applicable to your FM signal, compare the relative sizes of side-frequencies on the signal analyzer's display with the theoretical predictions in the table.

50. Once you have decided on the appropriate row of values and then follow the row to the beginning to read-off the FM signal's modulation index (*m*). Record this value in Table 1 on the next page.

Table 1

The FM signal's modulation index	



Ask the instructor to check your work before continuing.

Question 8

What would you expect to happen to the amplitude of the FM signal's 100kHz carrier if it was unmodulated? Explain your answer.

To verify your answer to Question 8…

51. Note the magnitude of the FM signal's carrier frequency.

52. Disconnect the patch lead to the Adder module's *A* input.

    Note: This removes the 31.333kHz and 35.333kHz sinewaves from the Adder module's output, effectively removing the 2kHz sinusoidal message's modulating influence on the 100kHz FM carrier.

53. Observe the effect this has on the 100kHz sinewave in the FM signal's spectrum.



Ask the instructor to check your work before finishing.



Emona DATEx™ Telecommunications Trainer Lab Manual Volume 2 - Further Experiments in Modern Analog and Digital Telecommunications For NI™ ELVIS I and II.

Author: Barry Duncan

Emona Instruments Pty Ltd
78 Parramatta Road
Camperdown NSW 2050
AUSTRALIA

web: **www.emona-tims.com**
telephone: +61-2-9519-3933
fax: +61-2-9550-1378