Emona DATEx
Lab Manual

Volume 1
Experiments in Modern Analog & Digital Telecommunications For NI™ ELVIS II

Barry Duncan



Emona DATEx
Lab Manual

Volume 1
Experiments in Modern Analog & Digital Telecommunications
For NI™ ELVIS II

Barry Duncan



Emona DATEx Lab Manual for NI™ ELVIS II
Volume 1 -
Experiments in Modern Analog and Digital Telecommunications.

Author: Barry Duncan
Technical editors: Tim Hooper & Carlo Manfredini

Issue Number: 3.1

Published by:

Emona Instruments Pty Ltd,
78 Parramatta Road
Camperdown NSW 2050
AUSTRALIA.

web: www.emona-tims.com
telephone: +61-2-9519-3933
fax: +61-2-9550-1378

Copyright © 2007 - 2011 Emona Instruments Pty Ltd and its related entities. All rights reserved. No part of this publication may be reproduced, translated, adapted, modified, edited or distributed in any form or by any means, including any network or Web distribution or broadcast for distance learning, or stored in any database or in any network retrieval system, without the prior written consent of Emona Instruments Pty Ltd.

For licensing information, please contact Emona Instruments Pty Ltd.
DATEx™ is a trademark of Emona TIMS Pty Ltd.

LabVIEW™, National Instruments™, NI™, NI ELVIS™, and NI-DAQ™ are trademarks of National Instruments Corporation. Product and company names mentioned herein are trademarks or trade names of their respective companies.

Printed in Australia

Contents

Introduction ..... i – iv

How to install and power up DATEx™ for NI ELVIS II/+ v

How to install and power up DATEx™ for NI ELVIS I vii

ESD Warning, Unpacking, Handling, Set-up and ESD Preventative Measures ix

1 - An introduction to the NI ELVIS II test equipment ..... Expt 1 - 1

2 - An introduction to the DATEx experimental add-in module ..... Expt 2 - 1

3 - An introduction to soft front panel control ..... Expt 3 - 1

4 - Using the Emona DATEx to model equations ..... Expt 4 - 1

5 - Amplitude modulation (AM) ..... Expt 5 - 1

6 - Double Sideband (DSBSC) modulation ..... Expt 6 - 1

7 - Observations of AM and DSBSC signals in the frequency domain ..... Expt 7 - 1

8 - AM demodulation ..... Expt 8 - 1

9 - Double Sideband DSBSC demodulation ..... Expt 9 - 1

10 - Single Sideband (SSB) modulation & demodulation ..... Expt 10 - 1

11 - Frequency Modulation (FM) ..... Expt 11 - 1

12 - FM demodulation ..... Expt 12 - 1

13 - Sampling & reconstruction ..... Expt 13 - 1

14 - PCM encoding ..... Expt 14 - 1

15 - PCM decoding ..... Expt 15 - 1

16 - Bandwidth limiting and restoring digital signals ..... Expt 16 - 1

17 - Amplitude Shift Keying (ASK) ..... Expt 17 - 1

18 - Frequency Shift Keying (FSK) ..... Expt 18 - 1

19 - Binary Phase Shift Keying (BPSK) ..... Expt 19 - 1

20 - Quadrature Phase Shift Keying (QPSK) ..... Expt 20 - 1

21 - Spread Spectrum - DSSS modulation & demodulation ..... Expt 21 - 1

22 - Undersampling in Software Defined Radio ..... Expt 22 - 1

Electrostatic Discharge Sensitive Product



CAUTION: The inputs/outputs of this product can be damaged if subjected to Electrostatic Discharge (ESD).

To prevent damage, industry-standard ESD prevention measures must be employed during installation, maintenance, and operation.

Introduction

The ETT-202 DATEx ™ Lab Manual Overview

The ETT-202 Lab Manual Volume One covers a broad range of introductory digital and analog telecommunications topics through a series of 20 carefully paced, hands-on laboratory experiments. Each experiment is written to support the theoretical concepts introduced in the class work of a first course in modern telecommunications.

Each DATEx experiment presents an interesting, hands-on learning experience for the student. In each experiment the student is challenged to build, measure and consider: there are no "instant" or "cookbook-style" experiments. DATEx is actually a true engineering modeling system where students see that the block diagrams so common in their textbooks represent real functioning systems.

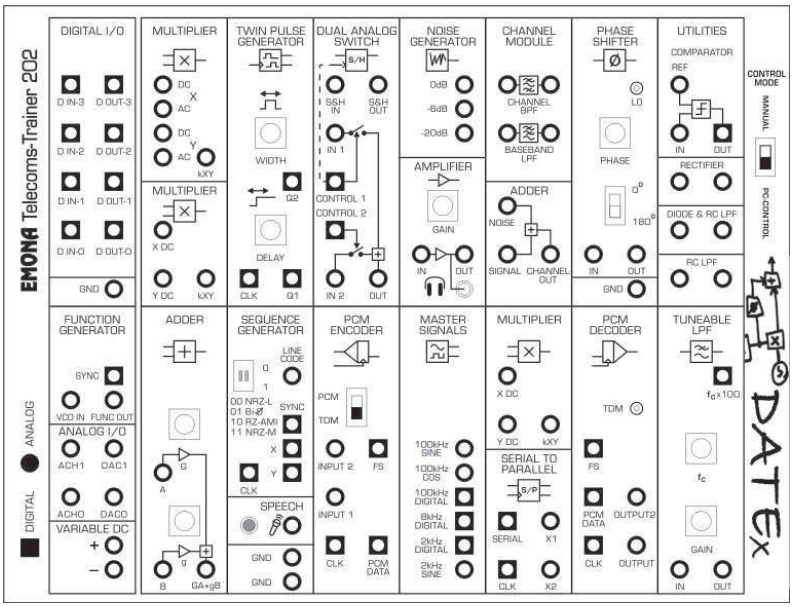

The Emona DATEx Add-in Module has a collection of blocks (called modules) that are patched together to implement dozens of telecommunications experiments.

Equipment Required

Experiments make use of the Emona DATEx telecommunications trainer kit together with the NI ELVIS I or II platform and NI LabVIEW running on a PC. The functionality and range of the virtual instrumentation available depends on the NI DAQ that is coupled with NI ELVIS I platform. ELVIS II has all necessary interfacing circuitry built into it.

Refer to the ETT-202 DATEx USER MANUAL for further details, as well as information on the installation and use of the DATEx/NI ELVIS experiment system.

Student Academic Level

Experiments in this volume have been prepared for students with only a basic knowledge of mathematics and a limited background in physics and electricity.

Students with a higher level of competence in mathematics will also gain a deeper understanding of telecommunications theory by using the DATEx system. Due to the engineering "modeling" nature of the DATEx system, they will be able to investigate more complex issues, carry out additional measurements and then contrast their findings to their theoretical understanding and mathematical analysis.

Didactic philosophy behind the ETT-202 DATEx™ System – Emona TIMS™ and the "Block Diagram" approach

The Emona DATEx telecommunications trainer draws on a well established experimental methodology that brings to life the "universal language" of telecommunications, the BLOCK DIAGRAM. Originally developed in the 1970's by Tim Hooper, a senior lecturer in telecommunications at The University of New South Wales, Australia, and further developed by Emona Instruments, Emona TIMS™, or "Telecommunications Instructional Modeling System", is used by thousands of students around the world, **to implement practically any form of modulation or coding**.

Block Diagrams

Block diagrams are used to explain the principle of operation of electronic systems (like a radio transmitter for example) without worrying about how the circuit works. Each block represents a part of the circuit that performs a separate task and is named according to what it does. Examples of common blocks in communications equipment include the *adder*, *multiplier, oscillator*, and so on.

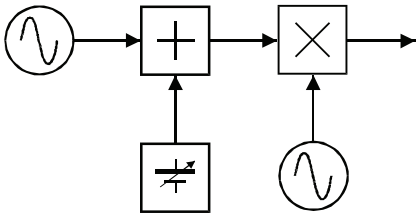

A typical telecom's BLOCK DIAGRAM

The TIMS™ and hence DATEx™ approach to implementing telecommunications experiments through realizing BLOCK DAIAGRAMS has the following benefits in the educational environment:

- Students gain practical experience with true mathematical modeling hardware, designed specifically for implementing telecommunications theory.
- Students actually build each experiment stage-by-stage, in an engineering manner, by following the BLOCK DIAGRAM.
- Students are free to try "what-if" scenarios to validate their understanding of the theory being investigated, by viewing real, real-time electrical signals.
- DATEx is designed to allow students to make mistakes, hence students will learn from their hands-on experiences as they investigate their findings.

One-to-One Relationship

The figure on the right illustrates the one-to-one relationship between each block of the BLOCK DIAGRAM and the independent functional circuit blocks of the DATEx trainer board.

The functional blocks of the DATEx board are used and re-used in experiments, just as blocks of the block diagram reappear in many different implementations.

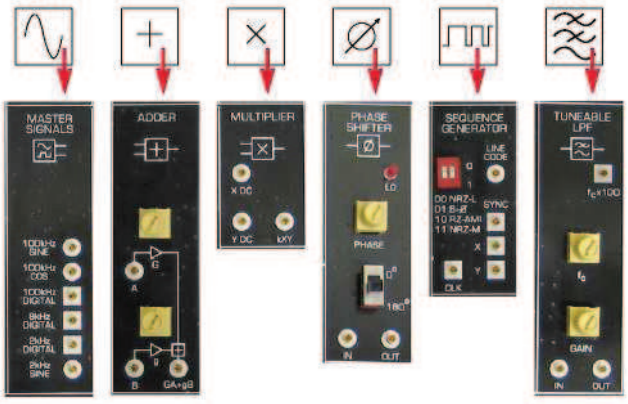

Examples of DATEx ™ functional blocks

NI LabVIEW™ and DATEx™
The Emona DATEx add-in module is fully integrated with the NI ELVIS platform and NI LabVIEW environment. All DATEx™ knobs and switches can be varied either manually or under the control NI LabVIEW VIs.

DATEx™ VIs are provided in the DATEx kit so that the student has the ability further enhance the experiment capabilities of the DATEx hardware, by utilizing the resources of NI LabVIEW and even integration with NI's wide range of RF products.

Guidelines for Using the Lab Manual

The experiments in this volume have been prepared for students with only a basic knowledge of mathematics. However, due to the engineering "modeling" nature of the DATEx add-in module, students with a higher level of competence in mathematics will equally gain a deeper understanding of telecommunications theory by carrying out these experiments.

The 20 chapters cover a broad range of telecommunications concepts, from fundamental topics familiar to all students, such as AM and FM broadcasting, through to the underlying technologies used in the latest mobile telephones and wireless systems. In each experiment, the core technology is revealed to the student, at its most fundamental level. The first chapters also provide a solid introduction to the NI ELVIS platform and the use of NI LabVIEW virtual instrumentation.

Chapters can be covered in any order, however, it is imperative that all students complete the first four chapters before proceeding to the subsequent chapters.

- Chapter 1 introduces the NI ELVIS test equipment.
- Chapter 2 introduces the Emona DATEx experimental add-in module.
- Chapter 3 introduces the DATEx Soft Front Panel control, and
- Chapter 4 introduces the concept of mathematical modeling using electronic functional blocks.

In order to make the student's learning experience more memorable, the student is usually able to both view signals on the NI ELVIS oscilloscope and then listen to their own voice undergoing the modulation or coding being investigated.

Making Mistakes and Mis-wiring
An important factor which makes the learning experience more valuable for the student is that the student is allowed to make wiring mistakes. DATEx inputs and outputs can be connected in any combination, without causing damage. As the student builds the experiment, they need to make constant observations, adjustments and corrections. If signals are not as expected then the student needs to make a decision as to whether the correction required is an adjustment or an incorrectly placed patching wire.

Structure of the Experiments and Topics
Each experiment in the DATEx Lab Manual provides a basic introduction to the topic under investigation, followed by a series of carefully graded hands-on activities. At the conclusion of each sub section the student is asked to answer questions to confirm their understanding of the work before proceeding.

It should be noted that the DATEx add-in module can implement many more experiments than are documented in this Volume One Lab Manual and further experiments will be released in later manuals.

Finally, since the ETT-202 Trainer is a true modeling system, the instructor has the freedom to modify existing experiments or even create completely new experiments to convey new and course specific concepts to students.

How to install and power up DATEx™ with NI ELVIS II/+

Handling DATEx

When holding DATEx, always hold the circuit board by the edges, as illustrated.



Hold DATEx by the edges



How not to hold DATEx

Ensure NI ELVIS II/+ Prototype Board Power OFF

Before installing the DATEx add-in module in the NI ELVIS II/+ PROTOTYPE PCI SLOT, always check the PROTOTYPING BOARD POWER switch is in the OFF position.



Ensure Prototype Board Power is OFF

Installing DATEx on NI ELVIS II/+

When installing the DATEx add-in module in the NI ELVIS II/+ PROTOTYPE PCI SLOT, always carefully check the alignment is correct before pushing DATEx into position.



Carefully align DATEx with the NI ELVIS socket



Check for correct bracket alignment



Carefully push DATEx into position

Power up DATEx

After DATEx is correctly positioned, turn the NI ELVIS II/+ Prototyping Board Power switch ON.



Turn NI ELVIS Prototype Board Power ON

Before removing DATEx™ from the NI ELVIS II/+

Ensure NI ELVIS II/+ Prototype Board Power is OFF

Before removing the DATEx add-in module from the NI ELVIS II/+ PROTOTYPE PCI SLOT, always turn the PROTOTYPING BOARD POWER switch OFF.



Ensure Prototype Board Power is OFF before removing DATEx

How to install and power up DATEx™ for NI ELVIS I

Handling DATEx

When holding DATEx, always hold the circuit board by the edges, as illustrated.



Hold DATEx by the edges



How not to hold DATEx

Ensure NI ELVIS I Prototype Board Power OFF

Before installing the DATEx add-in module in the NI ELVIS I PROTOTYPE PCI SLOT, always check the PROTOTYPING BOARD POWER switch is in the OFF position.



Ensure Prototype Board Power is OFF

Installing DATEx on NI ELVIS I

When installing the DATEx add-in module in the NI ELVIS I PROTOTYPE PCI SLOT, always carefully check the alignment is correct before pushing DATEx into position.

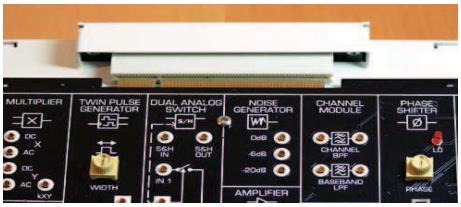

Carefully align DATEx with the NI ELVIS I socket



Check for correct bracket alignment



Carefully push DATEx into position

Power up DATEx

After DATEx is correctly positioned, turn the NI ELVIS I Prototyping Board Power switch ON.



Turn NI ELVIS I Prototype Board Power ON

Before removing DATEx™ from the NI ELVIS I

Ensure NI ELVIS I Prototype Board Power is OFF

Before removing the DATEx add-in module from the NI ELVIS I PROTOTYPE PCI SLOT, always turn the PROTOTYPING BOARD POWER switch OFF.



Ensure Prototype Board Power is OFF before removing DATEx

ESD Warning – ESD Sensitive Product



Caution Although this product has been designed to be as robust as possible, ESD (Electrostatic Discharge) can damage or upset this product. This product must be protected at all times from ESD. Static charges may easily produce potentials of several kilovolts on the human body or equipment, which can discharge without detection. Industry-standard ESD precautions must be employed at all times.



The Emona ETT-202 board is designed and intended for use as an experimental platform for hardware or software in an educational/professional laboratory environment. To facilitate usage, the board is manufactured with its components and connecting traces openly exposed to the operator and the environment. As a result, ESD sensitive (ESDS) components on the board, such as the semiconductor integrated circuits, can be damaged when exposed to an ESD event. To indicate the ESD sensitivity of the Emona ETT-202 board, it carries the symbol shown at left.

Unpacking, Transporting, and Storage

When unpacking the Emona ETT-202 board from its shipping carton, do not remove the board from the antistatic packaging material until you are ready to complete the installation. Before unwrapping the antistatic packaging, discharge yourself by touching a grounded bare metal surface, touching an approved anti-static mat, or wearing an ESD strap. When transporting or storing the Emona ETT-202 board, first place it in an antistatic container or packaging.

Handling and Setup

Handling the Emona ETT-202 board can damage the board components if ESD prevention measures are not applied. Before handling or setup, equalize your potential with the board by touching one of the integrated ESD discharge pads. During all handling and setup, ESD prevention measures must be applied. In addition, the Emona ETT-202 board should be handled by the edges. Touching exposed circuits, components or connectors could result in an ESD event. When setting up Emona ETT-202 board, observe the following guidelines to minimize the potential impact of ESD:

- Patch the desired experiment blocks using 2mm patch cords.
- Set switches and other controls to initial settings.
- Ensure the NI ELVIS is powered correctly by plugging the NI ELVIS AC/DC power supply brick into an appropriate AC outlet.
- Move the board power switch ON.

Operation

When operating the Emona ETT-202 board, ESD can cause upset as well as damage to the board components. Therefore, apply ESD prevention measures whenever operating the Emona ETT-202 board. In addition, observe the following guidelines:

- Do not touch exposed traces or components on the board while the board is powered on.
- Exercise caution when manipulating switches, buttons, knobs, and other controls while the board is powered on.

ESD Prevention Measures

ESD prevention measures focus on reducing or eliminating the build-up of static charge that may result in an ESD event that could damage or upset sensitive electronics. To minimize the potential for an ESD event, implement the following measures:

• Perform all work at an approved work station.
• Use an approved antistatic mat to cover your work surface.
• Wear a conductive wrist strap attached to the antistatic mat and a good earth ground.
• Before handling or beginning work, equalize your potential with the board by touching one of the "GND" pads.

Name: _____

Class: _____

1 - An introduction to the NI ELVIS II test equipment

Experiment 1 – An introduction to the NI ELVIS II test equipment

Preliminary discussion

The *digital multimeter* and *oscilloscope* are probably the two most used pieces of test equipment in the electronics industry. The bulk of measurements needed to test and/or repair electronics systems can be performed with just these two devices.



At the same time, there would be very few electronics laboratories or workshops that don't also have a *DC Power Supply* and *Function Generator*. As well as generating DC test voltages, the power supply can be used to power the equipment under test. The function generator is used to provide a variety of AC test signals.

Importantly, NI ELVIS II has these four essential pieces of laboratory equipment in one unit (and others). However, instead of each having its own digital readout or display (like the equipment pictured), NI ELVIS II sends the information via USB to a personal computer where the measurements are displayed on one screen.

On the computer, the NI ELVIS II devices are called "virtual instruments". However, don't let the term mislead you. The digital multimeter and scope are real measuring devices, not software simulations. Similarly, the DC power supply and function generator output real voltages.

The experiments in this manual make use of all four NI ELVIS II devices and others so it's important that you're familiar with their operation.

The experiment

This experiment introduces you to the NI ELVIS II digital multimeter, variable DC power supplies (there are two of them), oscilloscope and function generator. Importantly, the oscilloscope can be a tricky device to use if you don't do so often. So, this experiment also gives you a procedure that'll set it up ready to display a stable 2kHz 4Vp-p signal every time. Importantly, it's recommended that you use this procedure as a starting point for the other experiments in this manual.

It should take you about 50 minutes to complete this experiment.

Equipment

- Personal computer with appropriate software installed
- NI ELVIS II plus USB cable and power pack
- Emona DATEx experimental add-in module
- Two BNC to 2mm banana-plug leads
- Assorted 2mm banana-plug patch leads

 © 2008 Emona Instruments

Some things you need to know for the experiment

This box contains definitions for some electrical terms used in this experiment. Although you've probably seen them before, it's worth taking a minute to read them to check your understanding.

The **amplitude** of a signal is its physical size and is measured in *volts* (V). It is usually measured either from the middle of the waveform to the top (called the *peak* voltage) or from the bottom to the top (called the *peak-to-peak* voltage).

The **period** of a signal is the time taken to complete one cycle and is measured in *seconds* (s). When the period is small, it is expressed in milli seconds (ms) and even micro seconds (μs).

The **frequency** of a signal is the number of cycles every second and is measured in *hertz* (Hz). When there are many cycles per second, the frequency is expressed in kilo hertz (kHz) and even mega hertz (MHz).

A **sinewave** is a repetitive signal with the shape shown in Figure 1.



Figure 1

A **squarewave** is a repetitive signal with the shape shown in Figure 2.

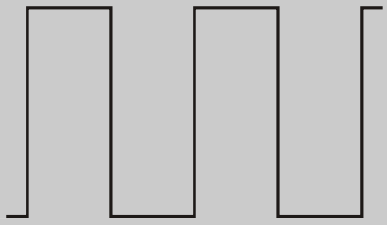

Figure 2

Procedure

Part A – Getting started

1. Ensure that the NI ELVIS II power switch at the back of the unit is off.

2. Carefully plug the Emona DATEx experimental add-in module into the NI ELVIS II.

3. Set the *Control Mode* switch on the DATEx module (top right corner) to *Manual*.

4. Connect the NI ELVIS II to the PC using the USB cable.

   Note: This may already have been done for you.

5. Turn on the NI ELVIS II power switch at the rear of the unit then turn on its *Prototyping Board Power* switch at the top right corner near the power indicator.

6. Turn on the PC and let it boot-up.

7. Launch the NI ELVISmx software per the instructor's directions.

   Note: If the NI ELVISmx software has launched successfully, the window called "ELVIS – Instrument Launcher" will be visible (see Figure 3).



Figure 3

Part B – The NI ELVIS II Digital Multimeter

The NI ELVIS II Digital Multimeter (DMM) is an instrument that can measure the following electrical properties: DC & AC voltages, DC & AC currents, resistance, capacitance and inductance. Its operation is briefly introduced next.

8. Use the mouse to click on the "DMM" button on the NI ELVISmx Instrument Launcher.

   Note: If the digital multimeter virtual instrument has launched successfully, the instrument's window will be visible (see Figure 4).

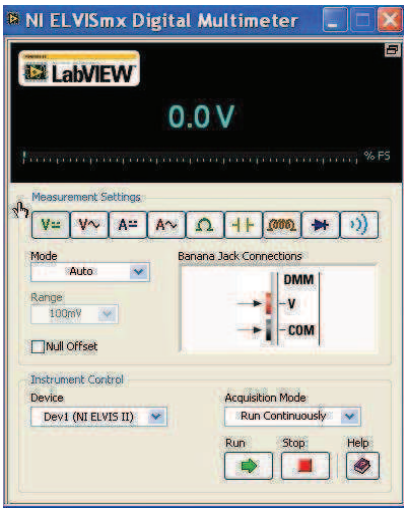

Figure 4

The digital multimeter's measurement options are selected using the *Measurement and Settings* controls on the virtual instrument (near the mouse-pointer in Figure 4).

9. Move the mouse-pointer over these controls but don't click on any of them yet.

   Note: As you do this, you'll notice that a pop-up appears to tell you by name what measurement mode the controls activate.

10. Click back and forth between one of the *Voltage* controls (marked *V*) and one of the *Current* controls (marked *A*).

    Note 1: As you do, notice that the buttons on the virtual instrument are animated. The selected control fades as though it has been physically pressed in.

    Note 2: Notice also that the *Banana Jack Connections* window updates to tell you which of the DMM's banana jacks to use on the left side of the NI ELIVS II for that particular measurement.

Importantly, simply launching the DMM virtual instrument doesn't activate the instrument's hardware. This must be done every time the DMM virtual instrument is launched using its *Run* control (the button with the green arrow).

11. Click on the DMM's *Run* control.

12. Click on each of the *Measurement and Settings* controls in turn while watching the DMM's readout.

    Note: As you do, notice that the readout updates to tell you the unit of measurement (eg *V* for volts, *A* for amps, etc). The readout also indicates the relative size of the measurement (for example, *m* for milli, *M* for mega, etc). See the instructor for more information if you're not familiar with the metric system of multiples and sub-multiples.

Question 1
Given you've not been asked to connect the digital multimeter's inputs to anything yet, why does the DMM read very small values of voltage and current instead of zero?

If you examine the DMM virtual instrument closely you'll notice that there are other settings on the DMM virtual instrument that can be adjusted including the *Mode*, *Null Offset* and *Acquisition Mode*. These controls default to appropriate settings for regular use so we'll not discuss them further here. Where adjustment of these controls is necessary, they'll be explained at the appropriate place in the experiments.



Ask the instructor to check your work before continuing.

Part C – The NI ELVIS II Variable Power Supplies

The NI ELVIS II Variable Power Supplies (VPS) is an instrument that can simultaneously output two DC voltages (one positive and one negative) to terminals on the Emona DATEx. Its operation is briefly discussed next.

13. Use the mouse to click on the "VPS" button on the NI ELVISmx Instrument Launcher.

    Note 1: Don't close the NI ELVISmx DMM virtual instrument because you'll be using it to verify the operation of the Variable Power Supplies.

    Note 2: If the Variable Power Supplies virtual instrument has launched successfully, the instrument's window will be visible (see Figure 5).

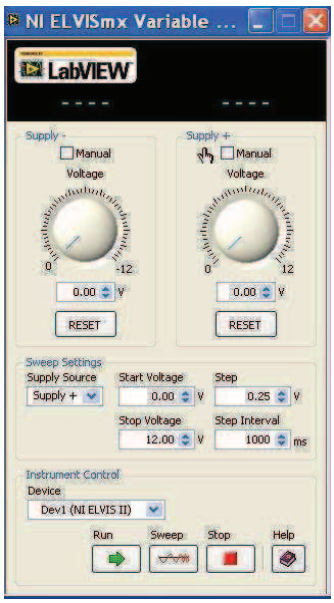

Figure 5

14. Put the NI ELVIS II Variable Power Supplies into *Manual* mode by checking the boxes next to the word *Manual* on both the positive and negative sides of the virtual instrument.

    Tip: One of the boxes is near the mouse-pointer in Figure 5.

    Note: Once you've performed this step, you'll notice that the virtual controls fade. This tells you that the virtual power supplies' outputs are controlled manually using the controls on the top right of the NI ELVIS II (directly below the USB *Ready* & *Active* indicators).

15. Click on the V⎓ DMM's control to put the unit into DC voltage measuring mode.

16. Set the two Variable Power Supplies *Voltage* controls to about half of their travel.

17. Connect the set-up shown in Figure 6 below.

    Tip: Use the 4mm banana plug to 2mm banana plug patch lead.

    Note: As you perform this step, you should see some activity on the DMM virtual instrument and the measurement on its readout change to about 6V.

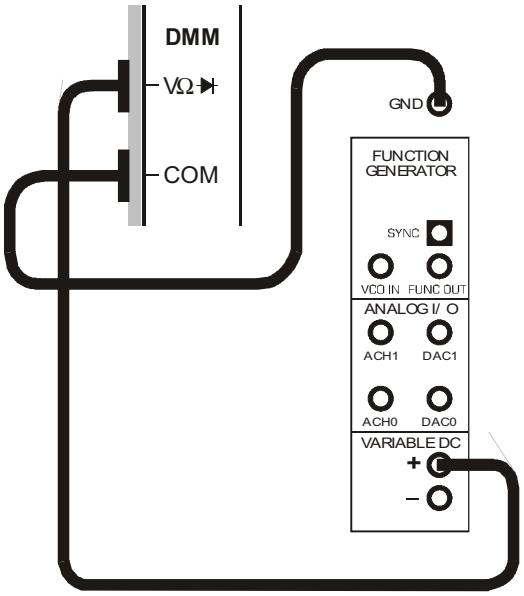

Figure 6

18. Use the *Voltage* control to determine the Variable Power Supplies' minimum and maximum positive output voltages. Record these in Table 1 below.

19. Connect the DMM to the Variable Power Supplies' negative output and repeat Step 18.

Table 1	Minimum output voltage	Minimum output voltage
Positive (+) output		
Negative (-) output		

 © 2008 Emona Instruments

Ask the instructor to check your work before continuing.

While the DMM can be used for measuring the Variable Power Supplies' outputs, the instrument can monitor its own outputs freeing the digital multimeter for other uses. The next steps demonstrate this.

20. Check the box at the top of the NI ELVIS II Variable Power Supplies' virtual instrument shown in Figure 7 below.

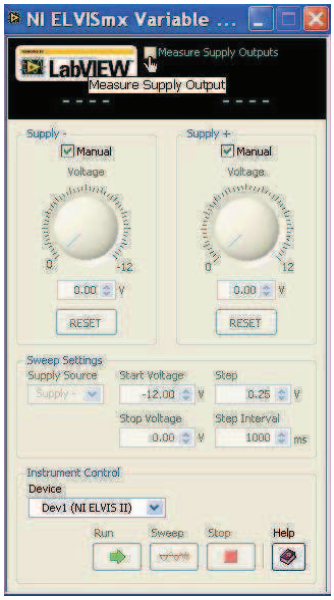

Figure 7

21. Vary the Variable Power Supplies' negative *Voltage* control and compare the values on the displays of the two virtual instruments – they should be the same.

Ask the instructor to check your work before continuing.

Part D – The NI ELVIS II Oscilloscope

The NI ELVIS II Oscilloscope (or just "scope") is a fully functional dual channel oscilloscope that allows engineers and technicians to measure AC waveforms and view their shape. Its operation is briefly discussed next.

22. Close the virtual instruments for the digital multimeter and Variable Power Supplies.

23. Use the mouse to click on the "Scope" button on the NI ELVISmx Instrument Launcher.

    Note: If the scope virtual instrument has launched successfully, the instrument's window will be visible (see Figure 8).

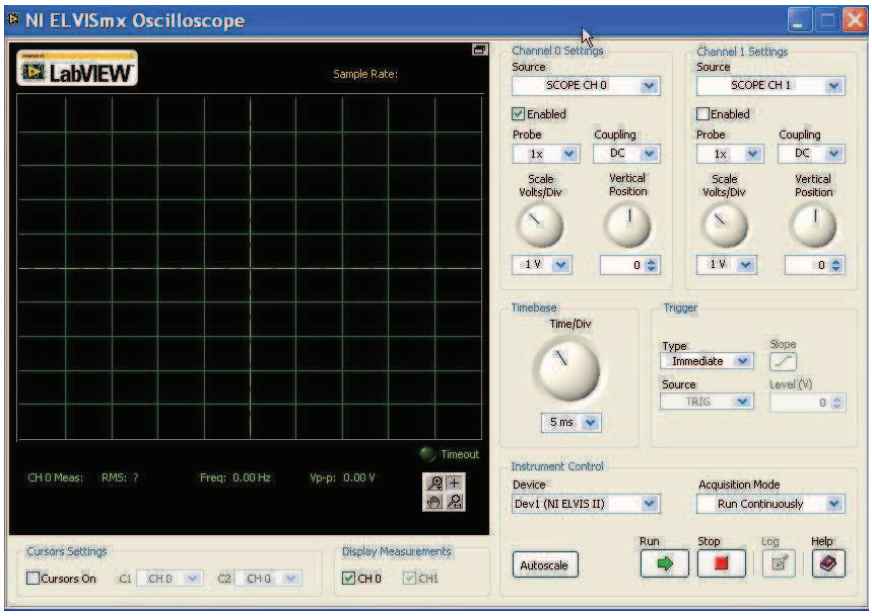

Figure 8

The NI ELVIS II Oscilloscope is operated using the controls on its virtual instrument. Although operating the NI ELVIS II Oscilloscope is much easier than operating other types of scopes, it can still be a little tricky to use when you're new to this piece of test equipment. The procedure on the next page is one that you can use to set it up ready to reliably view waveforms and take measurements when undertaking DATEx experiments.

Procedure for setting up the NI ELVIS II Oscilloscope

24. Follow the procedure below. Call the instructor for assistance if you can't find a particular control.

    Note: Much of this procedure simply involves checking that control settings are in the default positions used by the NI ELVIS II Oscilloscope at the time of writing this manual.

    General

    i) Check that the *Cursors On* box is doesn't have a tick in it.

    Vertical

    i) Check that the Channel 0 *Source* control is set to *SCOPE CH 0* and the Channel 1 *Source* control is set to *SCOPE CH 1*.

    ii) Check that the *Probe* control for both channels is set to *1×*.

    iii) Set the *Coupling* control for both channels to *AC*.

    iv) Check that the *Scale Volts/Div* control for both channels is set to *1V/div*.

    v) Check that the *Vertical Position* control for both channels is in the middle of their travel.

    Timebase

    i) Set the *Time/Div* control to the *500µs/div* position.

    Trigger

    i) Set the *Type* control to *Edge*.

    ii) Set the *Source* control to *CH 0 Source*.

    iii) Check that the *Level* control is set to *0*.

    iii) Check that the *Slope* control is set to the ⎍ position.

25. Activate the scope's hardware by clicking on its *Run* control.

Ask the instructor to check your work before continuing.

The next part of this experiment lets you familiarise yourself with NI ELVIS II Oscilloscope by observing and measuring a DATEx signal.

26. Connect the set-up shown in Figure 9 below.

Note: Notice that the connection to the Master Signals' *2kHz SINE* output must be made with the red banana plug. The black banana plug should be connected to any one of the ground (*GND*) sockets on the Emona DATEx.

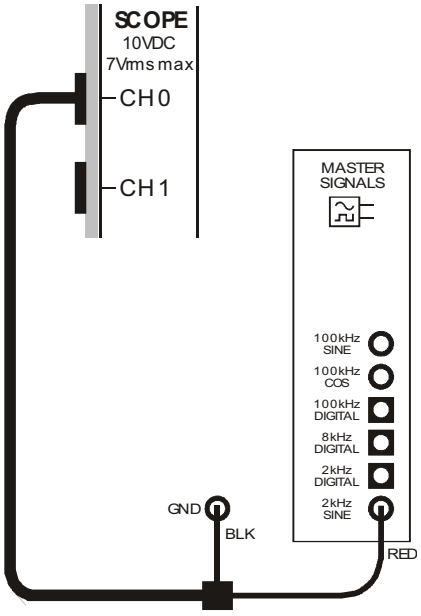

Figure 9

When measuring the amplitude of an AC waveform using a scope, it's common to measure its *peak-to-peak* voltage. That is, the difference between its lowest point and its highest point. This is shown in Figure 10. Importantly, knowing the waveform's peak-to-peak voltage allows us to calculate its *RMS* voltage where required.

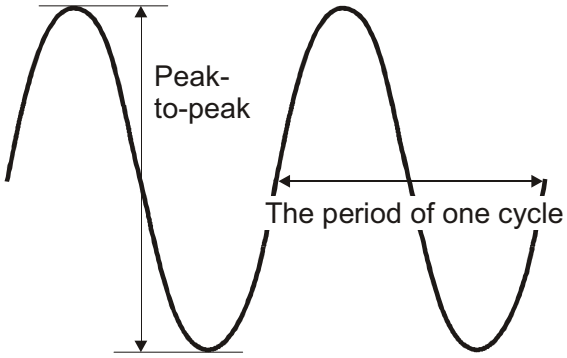

Figure 10

The other dimension of an AC waveform that's important to measure is its period. The period is the time it takes
to complete one cycle and this is also shown in Figure 10. While knowing the waveform's period may be useful in its own right, it also allows us to calculate the signal's frequency using the equation:

$$f = \frac{1}{Period}$$

Measuring the amplitude of signals and determining their frequency using conventional scopes is a little more involved that using a digital multimeter. As such, it can be easy for the novice to make mistakes. Helpfully, the NI ELVIS II Oscilloscope includes meters that measure voltage and frequency for you and readout the information on the display. The location of this information on the virtual instrument is below the graticule as shown in Figure 11 below.

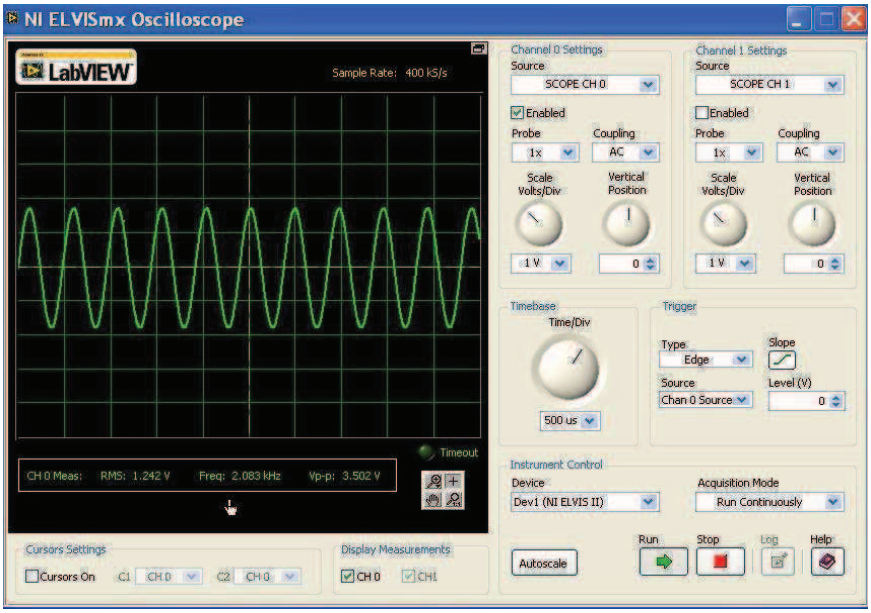

Figure 11

27. Record the scope's measured values for voltage (RMS and peak-to-peak) and frequency in Table 2 below.

28. Use the signal's frequency to work backwards to calculate and record its period.

    Tip: You'll have to transpose the equation on the previous page to make period (*P*) the subject.

Table 2

RMS voltage	
Frequency	
Pk-Pk voltage	
Period	



Ask the instructor to check your work before continuing.

 © 2008 Emona Instruments

Part E – The NI ELVIS II Function Generator

The NI ELVIS II Function Generator (FGEN) is an instrument that can output AC signals of various shapes and at various frequencies to terminals on the Emona DATEx. Its operation is briefly discussed next.

29. Use the mouse to click on the "FGEN" button on the NI ELVISmx Instrument Launcher.

    Note 1: Don't close the NI ELVISmx Scope virtual instrument because you'll be using it to verify the operation of the function generator.

    Note 2: If the function generator virtual instrument has launched successfully, the instrument's window will be visible (see Figure 12).

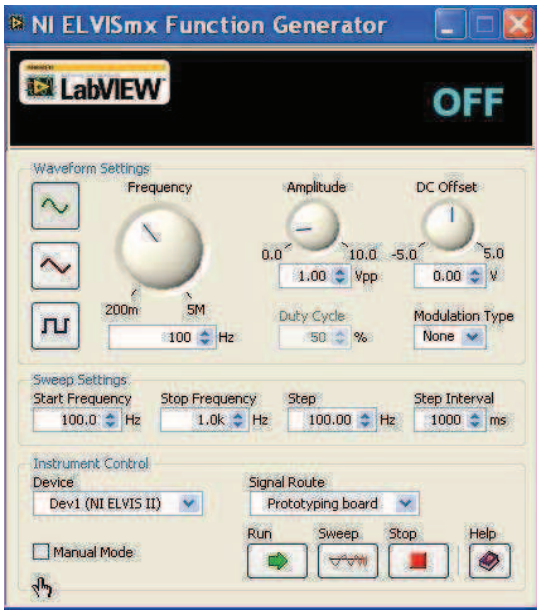

Figure 12

30. Check the box that puts the function generator into *Manual Mode*.

    Note: Once you've performed this step, you'll notice that the virtual controls fade. This tells you that the function generator's output is now a sinewave whose amplitude and frequency are controlled manually by the *Frequency* and *Amplitude* controls on the right side of the NI ELVIS II.

31. Set the function generator's *Amplitude* control on the right side of the NI ELVIS II to about half its travel.

32. To observe the function generator's output, connect the set-up shown in Figure 13 below.

Note: Again, the connection to the function generator's output must be made using the lead's red banana plug.

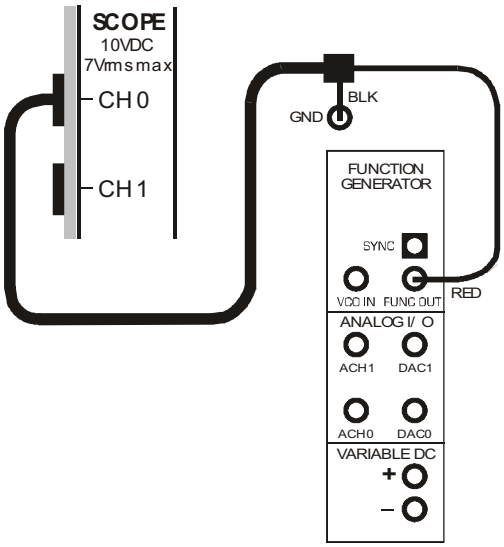

Figure 13

33. Adjust the scope's *Timebase* control for *1ms/div*.

Note: Once this step has been performed, you should see one complete cycle of a sinewave.

34. Vary the function generator's *Amplitude* control left and right and observe the effect on the function generator's output.

35. Determine the function generator's manually adjustable minimum and maximum output voltages and record your measurements in Table 3 below.

Table 3

Minimum output V	
Maximum output V	

 © 2008 Emona Instruments

36. Vary the function generator's *Frequency* control on the right side of the NI ELVIS II and observe the effect on the function generator's output.

Note 1: If this control doesn't seem to have an effect, keeping turning it.

Note 2: This control can vary the frequency of the function generator's output between 0.2Hz and 5MHz. However, it would take a lot of turns of the manual *Frequency* control to sweep between them. Experiment 3 introduces you to the controls on the function generator's virtual instrument which are more convenient to use.



Ask the instructor to check your work before finishing.

Name: _____

Class: _____

2 - An introduction to the DATEx experimental add-in module

Experiment 2 – An introduction to the DATEx experimental add-in module

Preliminary discussion

The Emona DATEx experimental add-in module for the NI ELVIS II is used to help people learn about communications and telecommunications principles. It lets you bring to life the block diagrams that fill communications textbooks. A "block diagram" is a simplified representation of a more complex circuit. An example is shown in Figure 1 below.

Block diagrams are used to explain the principle of operation of electronic systems (like a radio transmitter for example) without having to describe the detail of how the circuit works. Each block represents a part of the circuit that performs a separate task and is named according to what it does. Examples of common blocks in communications equipment include the *adder*, *filter*, *phase shifter* and so on.

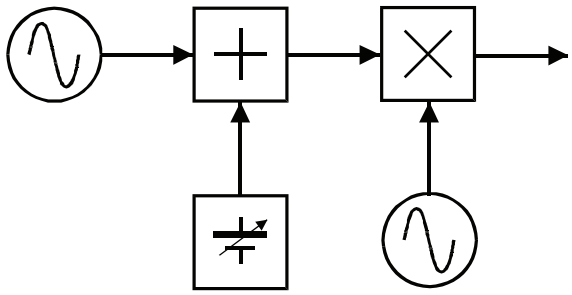

Figure 1

The DATEx has a collection of blocks (called *modules*) that you can put together to implement dozens of communications and telecommunications block diagrams.

The experiment

This experiment is in three stand-alone parts (2-1, 2-2 and 2-3) and each introduces you to one or more of the DATEx's analog modules. It's expected that you've completed Experiment 1 or have already been introduced to the NI ELVIS II system and its virtual instruments software.

It should take you about 50 minutes to complete experiment 2.1, another 50 minutes to complete 2.2 and about 25 minutes to complete 2.3.

Equipment

- Personal computer with appropriate software installed
- NI ELVIS II plus USB cable and power pack
- Emona DATEx experimental add-in module
- Two BNC to 2mm banana-plug leads
- Assorted 2mm banana-plug patch leads
- **For 2.1 only:** One set of headphones (stereo)

Some things you need to know for the experiment

This box contains definitions for some electrical terms used in this experiment. Although you've probably seen them before, it's worth taking a minute to read them to check your understanding.

Two signals that are **in phase** with each other reach key points in the waveform (like the peaks and zero-crossing points) at exactly the same time regardless of their size.

Two signals that **out of phase** reach key points in the waveform at different times. An example is shown in Figure 3 below.

Phase difference describes how much two signals are out of phase and is measured in degrees (like degrees in a circle). Signals that are in phase have a phase difference of 0°. Signals that are out of phase have a phase difference > 0° but < 360°.

A **sinewave** is a repetitive signal with the shape shown in Figure 2.

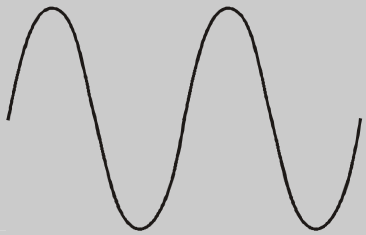

Figure 2

A **cosine wave** is simply a sinewave that is out of phase with another sinewave by exactly 90°. A sinewave and a cosine wave are shown in Figure 3. (They're not marked because, in this case, it doesn't matter which one is which.)

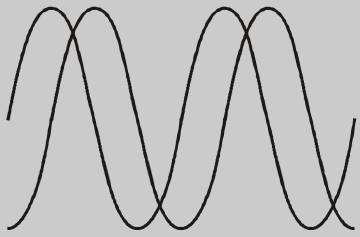

Figure 3

 © 2008 Emona Instruments

2.1 - The Master Signals, Speech and Amplifier modules

The Master Signals module

The Master Signals module is an AC signal generator or *oscillator*. The module has six outputs providing the following:

Analog	Digital
▪ A 2.083kHz sinewave	▪ A 2.083kHz squarewave (digital)
▪ A 100kHz sinewave	▪ An 8.33kHz squarewave (digital)
▪ A 100kHz cosine wave	▪ A 100kHz squarewave (digital)

Each signal is available on a socket on the module's faceplate that's labelled accordingly. Importantly, all signals are synchronised.

Procedure

1. Ensure that the NI ELVIS II power switch at the back of the unit is off.

2. Carefully plug the Emona DATEx experimental add-in module into the NI ELVIS II.

3. Set the *Control Mode* switch on the DATEx module (top right corner) to *Manual*.

4. Connect the NI ELVIS II to the PC using the USB cable.

   Note: This may already have been done for you.

5. Turn on the NI ELVIS II power switch at the rear of the unit then turn on its *Prototyping Board Power* switch at the top right corner near the power indicator.

6. Turn on the PC and let it boot-up.

7. Launch the NI ELVISmx software per the instructor's directions.

   Note: If the NI ELVISmx software has launched successfully, the window called "ELVIS – Instrument Launcher" will be visible.



Ask the instructor to check your work before continuing.

1. Connect the set-up shown in Figure 1 below.

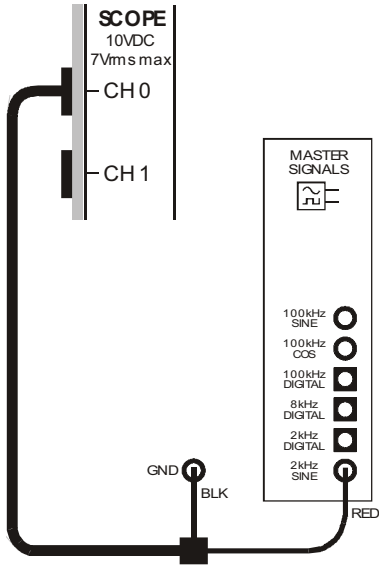

Figure 1

This set-up can be represented by the block diagram in Figure 2 below.

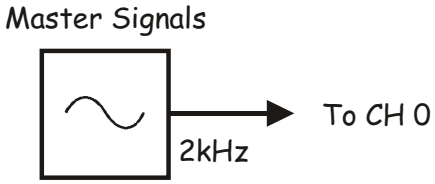

Figure 2

2. Launch and run the NI ELVIS II Oscilloscope and set it up per the procedure in Experiment 1 (page 1-12) ensuring that the *Trigger Source* control is set to *CH 0*.

3. Adjust the scope's *Timebase* control to view only two or so cycles of the Master Signals module's *2kHz SINE* output.

4. Use the scope's measuring function to find the amplitude (peak-to-peak) of the Master Signals module's *2kHz SINE* output. Record this in Table 1 on the next page.

5. Measure and record the frequency of the Master Signals module's *2kHz SINE* output.

6. Repeat Steps 12 to 14 for the Master Signals module's other two analog outputs.

Table 1	Output voltage	Frequency
2kHz SINE		
100kHz COSINE		
100kHz SINE		



Ask the instructor to check your work before continuing.

You have probably just found that there doesn't appear to be much difference between the Master Signals module's SINE and COSINE outputs. They're both 100kHz sinewaves. However, the two signals are out of phase with each other.

It's critical to the operation of several communications and telecommunications systems that there be two (or more) sinewaves with identical frequencies but out of phase with each other (usually by a specific amount). The Master Signals module's two 100kHz outputs satisfy this requirement and are 90° out of phase. The next part of the experiment lets you see this.

7. Connect the set-up shown in Figure 3 below.

   Note: Insert the black plugs of the oscilloscope leads into a ground (*GND*) socket.

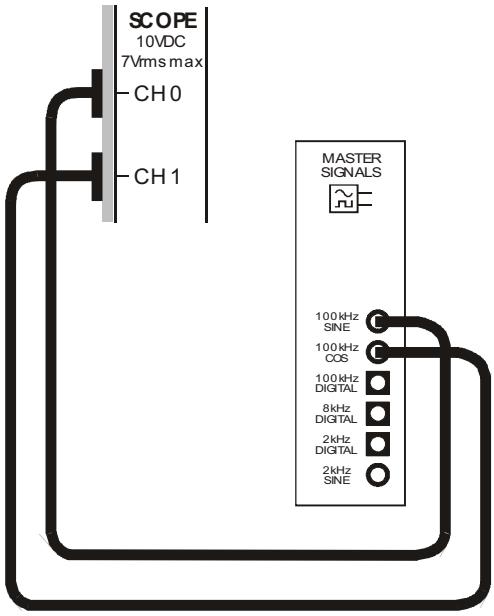

Figure 3

8. Activate the scope's Channel 1 input by checking (that is, putting a tick in) the Channel 1 *Enabled* box as shown in Figure 4 below.

Note 1: When you do, you should see a second signal appear on the display that's a different colour to the Channel 0 signal.

Note 2: You may notice that the two signals don't look like the clean sinewaves that you saw earlier. Importantly, the signals haven't changed shape. The distortion tells us that we're beginning to operate the NI ELVIS II at the limits of its specification (for reasons not discussed here).

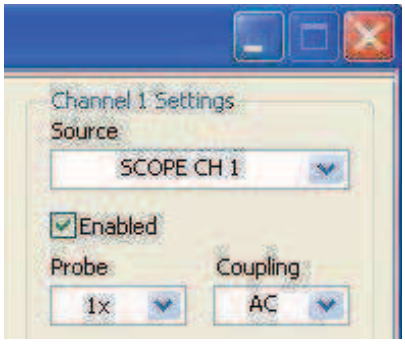

Figure 4

Question 1
By visual inspection of the scope's display, which of the two signals is leading the other? Explain your answer.

Ask the instructor to check your work before continuing.

The Speech module

Sinewaves are important to communications. They're used extensively for the *carrier* signal in many communications systems. Sinewaves also make excellent test signals. However, the purpose of most communications equipment is the transmission of speech (among other things) and so it's useful to examine the operation of equipment using signals generated by speech instead of sinewaves. The Emona DATEx allows you to do this using the Speech module.

9. Deactivate the scope's Channel 1 input.

10. Set the scope's *Timebase* control to the *2ms/div* position.

11. Connect the set-up shown in Figure 5 below.

    Note: Insert the oscilloscope lead's black plug into a ground (*GND*) socket.

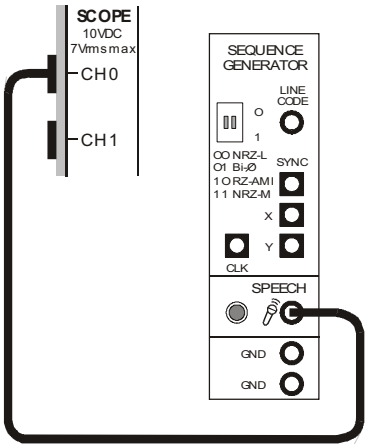

Figure 5

12. Talk and hum into the microphone while watching the scope's display. Be sure to say "one" and "two" several times.



Ask the instructor to check your work before continuing.

 © 2008 Emona Instruments

The Amplifier module

Amplifiers are used extensively in communications and telecommunications equipment. They're often used to make signals bigger. They're also used as an interface between devices and circuits that can't normally be connected. The Amplifier module on the Emona DATEx can do both.

13. Locate the Amplifier module and set its *Gain* control to about a third of its travel.

14. Connect the set-up shown in Figure 6 below.

    Note: Insert the black plugs of the oscilloscope leads into a ground (*GND*) socket.

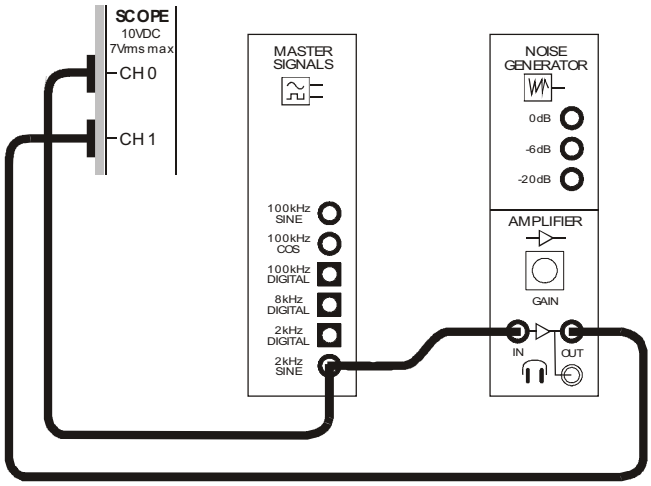

Figure 6

This set-up can be represented by the block diagram in Figure 7 below.

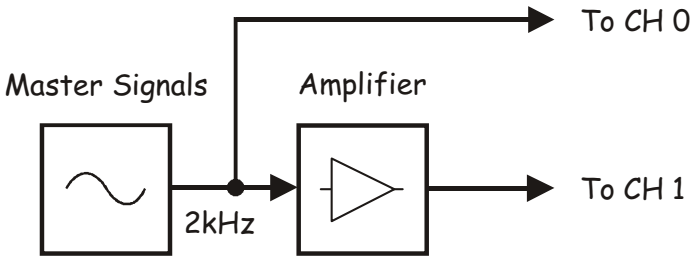

Figure 7

15. Adjust the scope's *Timebase* control to view two or so cycles of the Amplifier module's input.

16. Activate the scope's Channel 1 input.

17. Measure the amplitude (peak-to-peak) of the Amplifier module's input. Record your measurement in Table 2 below.

18. Measure and record the amplitude of the Amplifier module's output.

Table 2

Input voltage	Output voltage

The measure of how much bigger an amplifier's output voltage is compared to its input voltage is called *voltage gain* (A_V). An amplifier's voltage gain can be expressed as a simple ratio calculated using the equation:

$$A_V = \frac{Vout}{Vin}$$

Importantly, if the amplifier's output signal is upside-down compared to its input then a negative sign is usually put in front of the gain figure to highlight this fact.

Question 2
Calculate the Amplifier module's gain (on its present gain setting).



Ask the instructor to check your work before continuing.

The Amplifier module's gain is variable. Usefully, it can be set so that the output voltage is smaller than the input voltage. This is not amplification at all. Instead it's a loss or *attenuation*. The next part of the experiment shows how attenuation affects the gain figure.

19. Turn the Amplifier module's *Gain* control fully anti-clockwise then turn it clockwise just a little until you can just see a sinewave.

20. Resize the Amplifier module's output signal on the scope's display by adjusting Channel 1's *Scale* control to an appropriate setting.

21. Measure and record the amplitude of the Amplifier module's new output.

Table 3

Input voltage	Output voltage
See Table 2	

Question 3
Calculate the Amplifier module's new gain.

Question 4
In terms of the gain figure, what's the difference between gain and attenuation?



Ask the instructor to check your work before continuing.

Amplifiers work by taking the DC power supply voltage and using it to make a copy of the amplifier's input signal. Obviously then, the DC power supply limits the size of the amplifier's output. If the amplifier is forced to try to output a signal that is bigger than the DC power supply voltages, the tops and bottoms of the signal are chopped off. This type of signal distortion is called *clipping*.

Clipping usually occurs when the amplifier's input signal is too big for the amplifier's gain. When this happens, the amplifier is said to be *overdriven*. It can also occur if the amplifier's gain is too big for the input signal. To demonstrate clipping:

22. Turn the Amplifier module's *Gain* control fully clockwise.

23. Resize the Amplifier module's output signal on the display by adjusting Channel 1's *Scale* control to an appropriate setting.

Question 5
What do you think the output signal would look like if the amplifier's gain was sufficiently large?



Ask the instructor to check your work before continuing.

24. **Turn the Amplifier module's *Gain* control fully anti-clockwise**.

Headphones are typically low impedance devices – usually around 50Ω. Most electronic circuits are not designed to have such low impedances connected to their output. For this reason, headphones should not be directly connected to the output of most of the modules on the Emona DATEx.

However, the Amplifier module has been specifically designed to handle low impedances. So, it can act as a buffer between the modules' outputs and the headphones to let you listen to signals. The next part of the experiment shows how this is done.

25. Ensure that the Amplifier module's *Gain* control is turned fully anti-clockwise.

26. Without wearing the headphones, plug them into the Amplifier module's headphone socket.

27. Put the headphones on.

28. Turn the Amplifier module's *Gain* control clockwise and listen to the signal.

29. Disconnect the plugs from the Master Signals module's *2kHz SINE* output and connect them to the Speech module's output.

30. Speak into the microphone and listen to the signal.

31. Disconnect the plugs from the Speech module's output and connect them to the Master Signals module's *100kHz SINE* output.

32. Carefully turn the Amplifier module's *Gain* control clockwise and listen for a signal.

Question 6
Why is the Master Signals module's *100kHz SINE* output inaudible?

33. Turn the Amplifier module's *Gain* control fully anti-clockwise again.



Ask the instructor to check your work before finishing.

2.2 – The Adder and Phase Shifter modules

The Adder module

Several communications and telecommunications systems require that signals be added together. The Adder module has been designed for this purpose.

Procedure

1. If your equipment is still set up from the previous experiment then jump to Step 9. If not, continue on to Step 2.

2. Ensure that the NI ELVIS II power switch at the back of the unit is off.

3. Carefully plug the Emona DATEx experimental add-in module into the NI ELVIS II.

4. Set the *Control Mode* switch on the DATEx module (top right corner) to *Manual*.

5. Connect the NI ELVIS II to the PC using the USB cable.

   Note: This may already have been done for you.

6. Turn on the NI ELVIS II power switch at the rear of the unit then turn on its *Prototyping Board Power* switch at the top right corner near the power indicator.

7. Turn on the PC and let it boot-up.

8. Launch the NI ELVISmx software per the instructor's directions.

   Note: If the NI ELVISmx software has launched successfully, the window called "ELVIS – Instrument Launcher" will be visible.



Ask the instructor to check your work before continuing.

 © 2008 Emona Instruments

9. Launch and run the NI ELVIS II Oscilloscope and set it up per the procedure in Experiment 1 (page 1-12) ensuring that the *Trigger Source* control is set to *CH 0*.

10. Locate the Adder module and turn its *g* control (for *Input B*) fully anti-clockwise.

11. Set the Adder module's *G* control (for *Input A*) to about the middle of its travel.

12. Connect the set-up shown in Figure 1 below.

    Note: Although not shown, insert the black plugs of the oscilloscope leads into a ground (*GND*) socket.

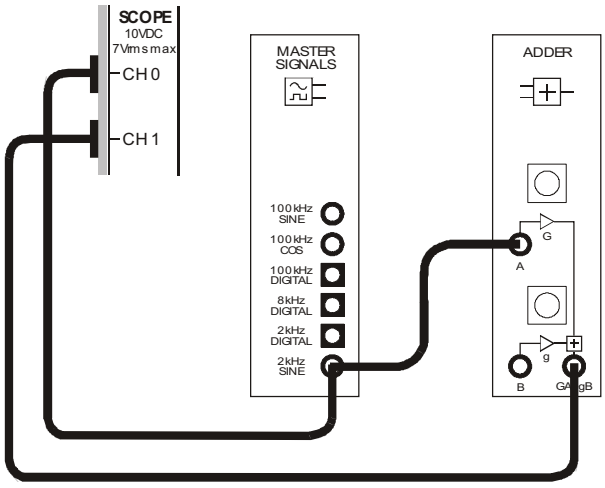

Figure 1

This set-up page can be represented by the block diagram in Figure 2 below.

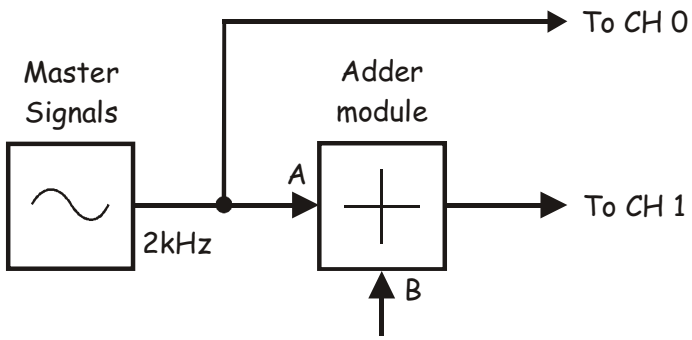

Figure 2

13. Adjust the scope's *Timebase* control to view two or so cycles of the Master Signals module's *2kHz SINE* output.

14. Activate the scope's Channel 1 input (by checking the Channel 1 *Enabled* box) to view the Adder module's output **as well as** the Master Signals module's *2kHz SINE* output.

15. Vary the Adder module's *G* control left and right and observe the effect.

Question 1
What aspect of the Adder module's performance does the *G* control vary?

---

16. Use the scope's measuring function to measure the voltage on the Adder module's *Input A*. Record your measurement in Table 1 below.

17. Turn the Adder module's *G* control fully clockwise.

18. Measure and record the Adder module's output voltage.

19. Calculate and record the voltage gain of the Adder module's *Input A*.

20. Turn the Adder module's *G* control fully anti-clockwise.

21. Resize the Adder module's output signal on the scope's display by adjusting Channel 1's *Scale* control to an appropriate setting.

22. Repeat Steps 18 and 19.

Table 1		Input voltage	Output voltage	Gain
Input A	Maximum			
	Minimum			

Question 2
What is the range of gains for the Adder module's A input?

 © 2008 Emona Instruments



Ask the instructor to check your work before continuing.

23. Leave the Adder module's *G* control fully anti-clockwise.

24. Disconnect the Master Signals module's *2kHz SINE* output from the Adder module's *Input A* and connect it to the Adder's *Input B*.

25. Turn the Adder module's *g* control fully clockwise.

26. Resize the Adder module's output signal on the scope's display by adjusting Channel 1's *Scale* control to an appropriate setting.

27. Measure the Adder module's output voltage. Record your measurement in Table 2 below.

28. Calculate and record the voltage gain of the Adder module's *Input B*.

29. Turn the Adder module's *g* control fully anti-clockwise.

30. Repeat Steps 26 to 28.

Table 2		Input voltage	Output voltage	Gain
Input B	Maximum	See Table 1		
	Minimum			

Question 3

Compare the results in Tables 1 and 2. What can you say about the Adder module's two inputs in terms of their gain?



Ask the instructor to check your work before continuing.

31. Turn both of the Adder module's *Gain* controls fully clockwise.

32. Connect the Master Signals module's *2kHz SINE* output to both of the Adder module's inputs.

33. Resize the Adder module's output signal on the scope's display by adjusting Channel 1's *Scale* control to an appropriate setting.

34. Measure the Adder module's new output voltage. Record your measurement in Table 3 below.

Table 3

Adder's output voltage	

Question 4

What is the relationship between the amplitude of the signals on the Adder module's inputs and output?



Ask the instructor to check your work before continuing.

 © 2008 Emona Instruments

The Phase Shifter module

Several communications and telecommunications systems require that the signal to be transmitted (speech, music and/or video) is phase shifted. Crucial to being able to implement these systems in later experiments is the ability to phase shift any signal by almost any amount. The Phase Shifter module has been designed for this purpose.

35. Locate the Phase Shifter module and set its *Phase Change* switch to the *0°* position.

36. Set the Phase Shifter module's *Phase Adjust* control to about the middle of its travel.

37. Connect the set-up shown in Figure 3 below.

    Note 1: Insert the black plugs of the oscilloscope leads into a ground (*GND*) socket.

    Note 2: The LED on the Phase Shifter module will turn on but don't be concerned by this. The LED is used to indicate that the module has automatically adjusted itself for your low frequency input.

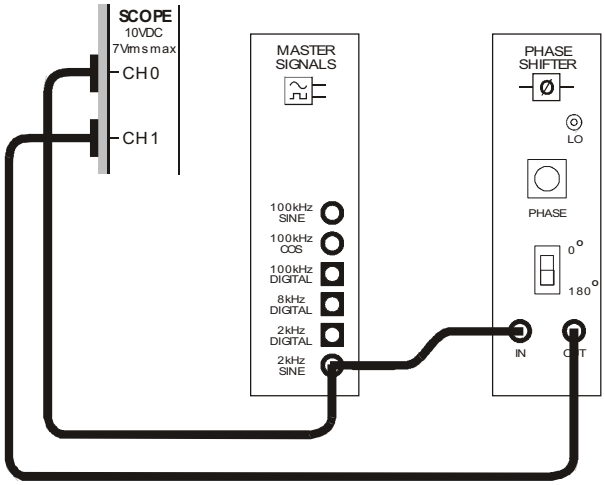

Figure 3

The set-up in Figure 3 can be represented by the block diagram in Figure 4 below.

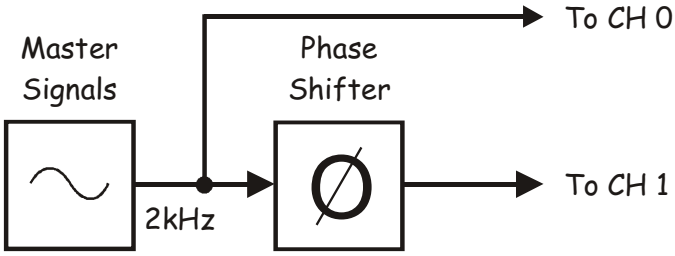

Figure 4

38. Adjust the scope's *Scale* control for both channels for signals that are a suitable size on the display.

39. Vary the Phase Shifter module's *Phase Adjust* control left and right and observe the effect on the two signals.

40. Set the Phase Shifter module's *Phase Change* control to the *180°* position.

41. Vary the Phase Shifter module's *Phase Adjust* control left and right and observe the effect on the two signals.

Question 5
This module's output signal can be phase shifted by different amounts

- ☐ but it always leads the input signal.
- ☐ but it always lags the input signal.
- ☐ and can either lead or lag the input signal.



Ask the instructor to check your work before finishing.

 © 2008 Emona Instruments

2.3 - The Voltage Controlled Oscillator (VCO)

A VCO is an oscillator with an adjustable output frequency that is controlled by an external voltage source. It's a very useful circuit for communications and telecommunications systems as you'll see. The NI ELVIS II Function Generator's operation can be modified by the Emona DATEx to function as a VCO if required.

Procedure

1. If your equipment is still set up from the previous experiment then jump to Step 9. If not continue on to Step 2.

2. Ensure that the NI ELVIS II power switch at the back of the unit is off.

3. Carefully plug the Emona DATEx experimental add-in module into the NI ELVIS II.

4. Set the *Control Mode* switch on the DATEx module (top right corner) to *Manual*.

5. Connect the NI ELVIS II to the PC using the USB cable.

   Note: This may already have been done for you.

6. Turn on the NI ELVIS II power switch at the rear of the unit then turn on its *Prototyping Board Power* switch at the top right corner near the power indicator.

7. Turn on the PC and let it boot-up.

8. Launch the NI ELVISmx software per the instructor's directions.

   Note: If the NI ELVISmx software has launched successfully, the window called "ELVIS – Instrument Launcher" will be visible.



Ask the instructor to check your work before continuing.

9. Launch and run the NI ELVIS II Oscilloscope and set it up per the procedure in Experiment 1 (page 1-12) ensuring that the *Trigger Source* control is set to *CH 0*.

10. Set the NI ELVIS II Variable Power Supplies' controls (near the top right of the unit) as follows:

    - *Positive Voltage* to the *0V* position (that is, fully anti-clockwise)
    - *Negative Voltage* to the *0V* position (that is, fully anti-clockwise)

11. Launch the NI ELVIS II Variable Power Supplies' virtual instrument and check the *Manual* boxes to put them in to manual mode.

    Note: Recall that checking these boxes hands control of the Variable Power Supplies' outputs over to the controls that you adjusted for Step 10.

12. Launch and run the NI ELVIS II Function Generator virtual instrument.

13. Type *5000* in the function generator's *Hz* window and press *Enter* on the keyboard.

    Note: Once you've done this, the window's value will change to "5k" as shown in Figure 1 below.

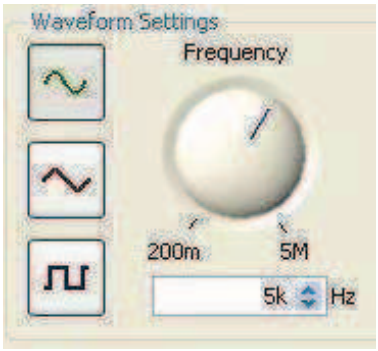

Figure 1

14. Adjust the function generator for a 4Vpp output.

15. Set the function generator's *Modulation Type* to *FM*.

    Note: This step puts the function generator in to VCO mode.

16. Connect the set-up shown in Figure 2 below.

Note: Although not shown, insert the black plug of the oscilloscope lead into a ground (*GND*) socket.

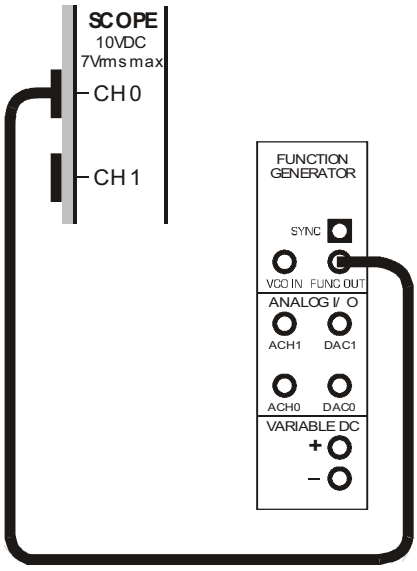

Figure 2

17. Adjust the scope's *Timebase* control to view two or so cycles of the function generator's output.

18. Use the scope's measuring function to find the frequency of the function generator's output. Record your measurement in Table 1 below.

Table 1	Frequency
Function generator's output	

19. Modify the set-up as shown in Figure 3 below.

Before you do…

The set-up in Figure 3 builds on Figure 2 so don't pull it apart. Existing wiring is shown as dotted lines to highlight the patch leads that you need to add.

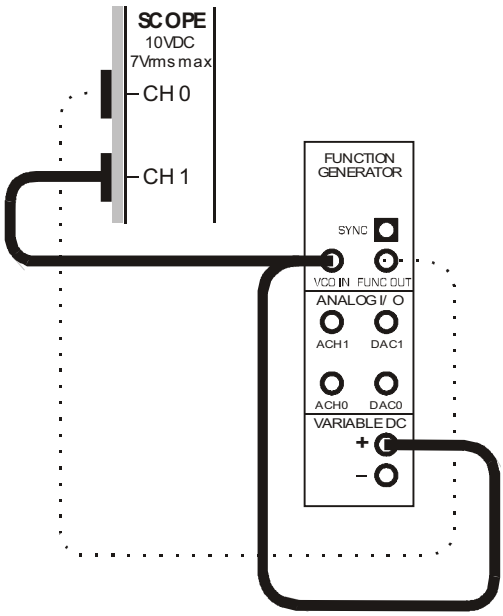

Figure 3

This set-up can be represented by the block diagram in Figure 4 below.

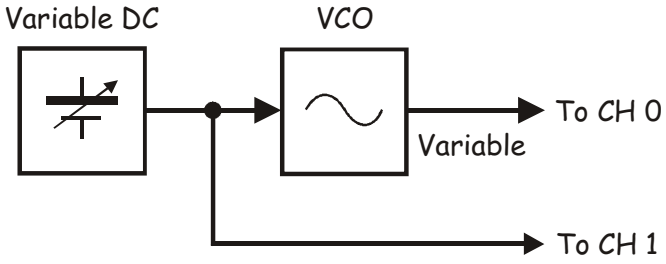

Figure 4

20. Activate the scope's Channel 1 input to view the function generator's DC input voltage **as well as** its AC output voltage.

21. Set the scope's Channel 1 *Scale* control to the *5V/div* position.

22. Set the scope's Channel 1 *Coupling* control to the *DC* position.

23. Increase the Variable Power Supplies' positive output voltage while watching the scope's display.

Question 1
What happens to the function generator's output when you increase its positive DC input voltage?

_____

24. Set the Variable Power Supplies' positive output voltage to 10V.

25. Measure the function generator's new output frequency. Record your measurement in Table 2 below.

Table 2	Frequency
Function generator's new output	

Question 2
Use the information in Tables 1 and 2 to determine the function generator's VCO *sensitivity* (that is, how much its output frequency changes per volt).

_____

_____

Note: The VCO *sensitivity* is different for ELVIS I and ELVIS II. Be aware of this difference if you have both in your lab. You may wish to compare the difference if you have the time. If you do, make sure that you take readings at several frequencies across the range.



Ask the instructor to check your work before continuing.

Importantly, the function generator's VCO sensitivity is different for different frequency decades.

26. Repeat this process to determine the sensitivity of the function generator's VCO at 500Hz and 50kHz. Record your measurements in Table 3 below.

Table 3	Sensitivity
500Hz setting	
50kHz setting	



Ask the instructor to check your work before continuing.

27. Modify the set-up as shown in Figure 5 below.

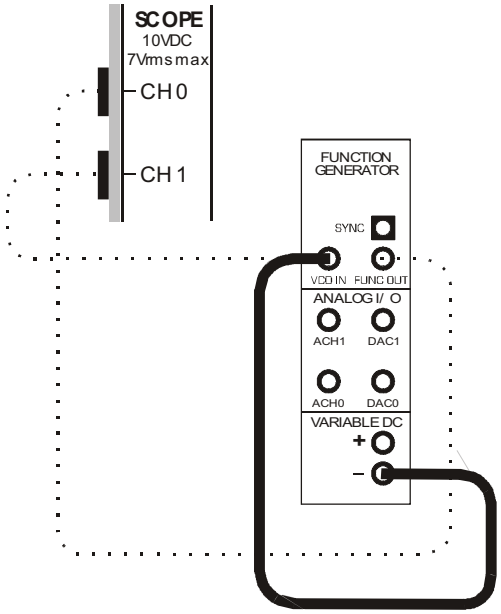

Figure 5

This set-up can be represented by the block diagram in Figure 6 below.

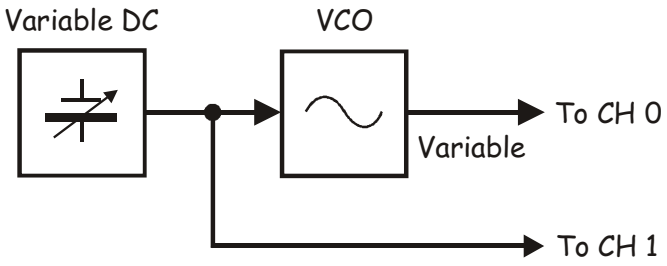

Figure 6

28. Increase the Variable Power Supplies' negative output voltage while watching the scope's display.

Question 3
What happens to the function generator's output when you increase its negative DC input voltage?



Ask the instructor to check your work before finishing.

Name: _____

Class: _____

3 - An introduction to soft front-panel control

Experiment 3 – An introduction to soft front-panel control

Preliminary discussion

The "front-panel" of an electronics system is the face of the unit that contains most if not all of the controls that the user can adjust to vary the system's performance in some way. As an example, the NI ELVIS II front-panel is shown in Figure 1.

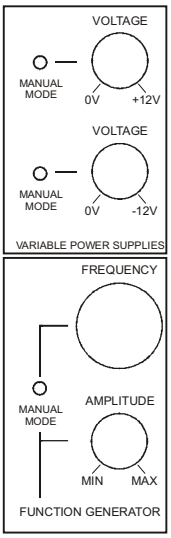

Figure 1

Over the last 20 to 30 years, digital control electronics has dramatically changed the front-panel. Multiple-pole ganged switches and potentiometers have largely given way to momentary buttons and infinite-turn rotary devices. For examples of these, think of how you change the station or volume on a car or home stereo system these days.

The digital takeover of system control has also made true remote control over systems possible. As you know, most domestic electronic devices these days can at least be turned on and off from an infrared (IR) or radio frequency (RF) remote device. In fact, for modern televisions and video recording devices there are more controls on the remote than on the unit itself. In other words, the remote control has become the front-panel.

Advances in personal computers (PCs) and digital data communications have provided for a different type of remote control for non-domestic applications such as data acquisition and industrial process control. For this type of equipment, the front-panel is either duplicated or replaced altogether by a "soft" front-panel on a computer screen that can be metres or thousands of kilometres away from the equipment being controlled. Soft front-panels have virtual buttons and knobs that, when adjusted on screen, result in changes in a system's performance as though a real button or knob had been adjusted.

You have seen this type of control before if you've attempted Experiments 1 and 2. The NI ELVIS II DMM and Oscilloscope are instruments without any hard controls. You operated them by using virtual buttons and knobs on a computer screen. The NI ELVIS II Variable Power Supplies and Function Generator and the Emona DATEx can be controlled in the same way.

The experiment

This experiment introduces you to soft front-panel control of the NI ELVIS II test equipment and the Emona DATEx experimental add-in module. It is expected that you've completed Experiment 1 or have already been introduced to the NI ELVIS II system and its virtual instruments software.

It should take you about 40 minutes to complete this experiment.

Equipment

- Personal computer with appropriate software installed
- NI ELVIS II plus USB cable and power pack
- Emona DATEx experimental add-in module
- Two BNC to 2mm banana-plug leads
- Assorted 2mm banana-plug patch leads

Something you need to know for the experiment

This box contains the definition for an electrical term used in this experiment. Although you've probably seen it before, it's worth taking a minute to read it to check your understanding.

When two signals are **180° out of phase**, they're out of step by half a cycle. This is shown in Figure 2 below. As you can see, the two signals are always travelling in opposite directions. That is, as one goes up, the other goes down (and vice versa).

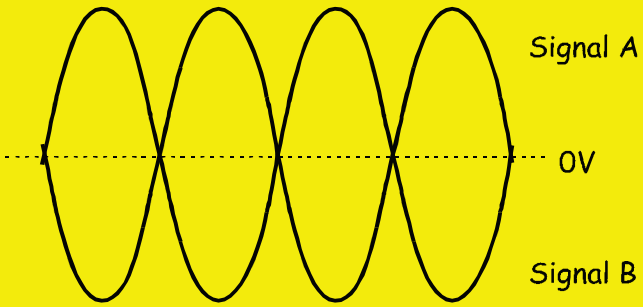

Figure 2

 © 2008 Emona Instruments

Procedure

Part A – Soft control of the NI ELVIS II Variable Power Supplies and Function Generator

1. Ensure that the NI ELVIS II power switch at the back of the unit is off.

2. Carefully plug the Emona DATEx experimental add-in module into the NI ELVIS II.

3. Set the *Control Mode* switch on the DATEx module (top right corner) to *Manual*.

4. Connect the NI ELVIS II to the PC using the USB cable.

   Note: This may already have been done for you.

5. Turn on the NI ELVIS II power switch at the rear of the unit then turn on its *Prototyping Board Power* switch at the top right corner near the power indicator.

6. Turn on the PC and let it boot-up.

7. Launch the NI ELVISmx software per the instructor's directions.

   Note: If the NI ELVISmx software has launched successfully, the window called "ELVIS – Instrument Launcher" will be visible (see Figure 3).



Figure 3



Ask the instructor to check your work before continuing.

8. Connect the set-up shown in Figure 4 below.

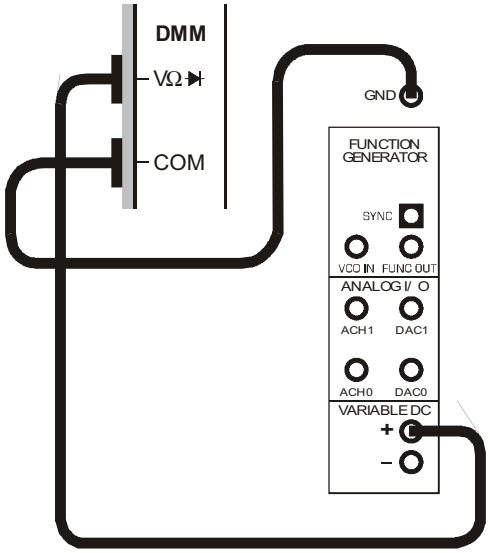

Figure 4

9. Launch the NI ELVIS II DMM virtual instrument (VI) and click on its *Run* control.

10. Launch the NI ELVIS II Variable Power Supplies VI and clock on its *Run* control.

Note: On successfully launching these VIs the windows in Figure 5 below should be visible. Arrange them on the PC's desktop for your convenience.

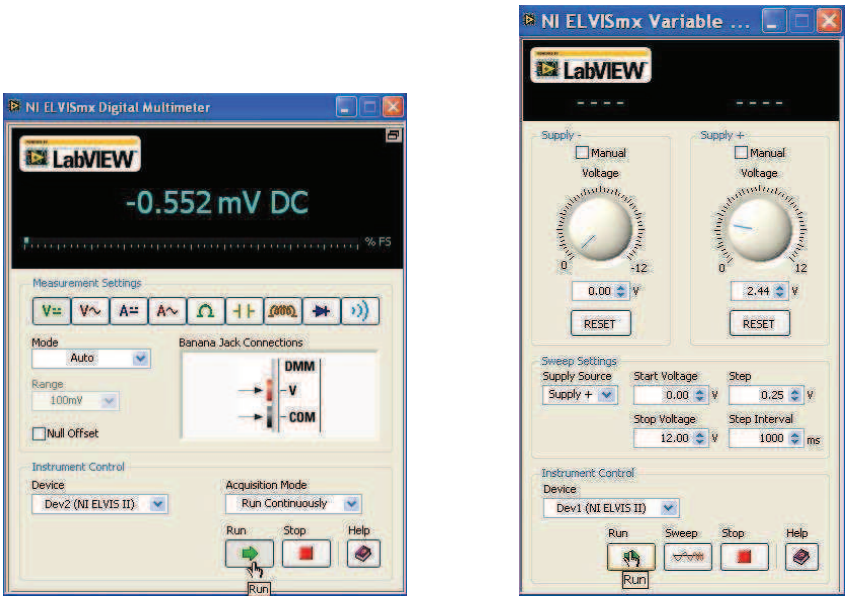

Figure 5

11. Try adjusting the Variable Power Supplies' positive output **hard** *Voltage* control on the upper right side of the NI ELVIS II and note the DMM's reading as you do.

    Note: You'll find that this has no effect of the Variable Power Supplies' positive output. This is because the default start-up condition of the VIs is for soft control over their instruments.

12. Vary the Variable Power Supplies' positive output voltage by using the mouse to "grab and turn" the **soft** *Voltage* control on-screen (see Figure 6).

    Note: This time you should find that the output voltage changes. If not, call the instructor for assistance.

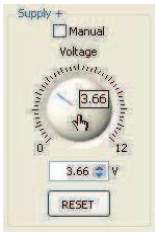

Figure 6

13. Set the Variable Power Supplies positive output voltage to exactly 7.59V by typing that value into the *V* window as shown in Figure 7 below.



Figure 7

14. Preset the *RESET* button below the *V* window and observe the effect.

15. Connect the DMM to the negative *Variable DC* output.

16. Repeat Steps 12 to 14 to affect the Variable Power Supplies' negative output.

Question 1
What is the advantage of being able to adjust the Variable Power Supplies using the soft front-panel?

Ask the instructor to check your work before continuing.

17. Close the Variable Power Supplies and DMM VIs.

18. Connect the set-up shown in Figure 8 below.

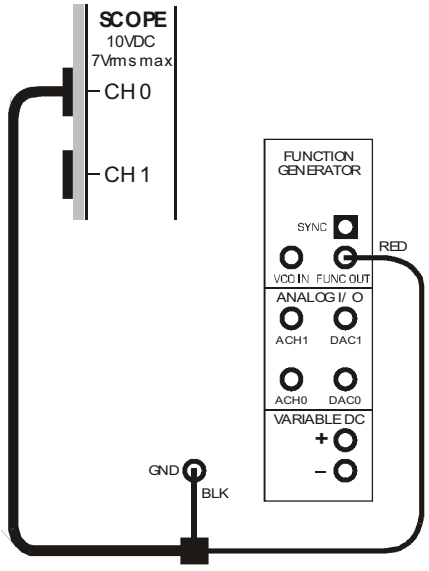

Figure 8

19. Launch and run the NI ELVIS II Oscilloscope and set it up per the procedure in Experiment 1 (page 1-12) with the following change:

   - *Timebase* control to the *5ms/div* position instead of *500µs/div*

20. Launch the NI ELVIS II Function Generator VI and click on its *Run* control.

    Note: On successfully launching these VIs the windows in Figure 9 below should be visible. Arrange them on the PC's desktop for your convenience.

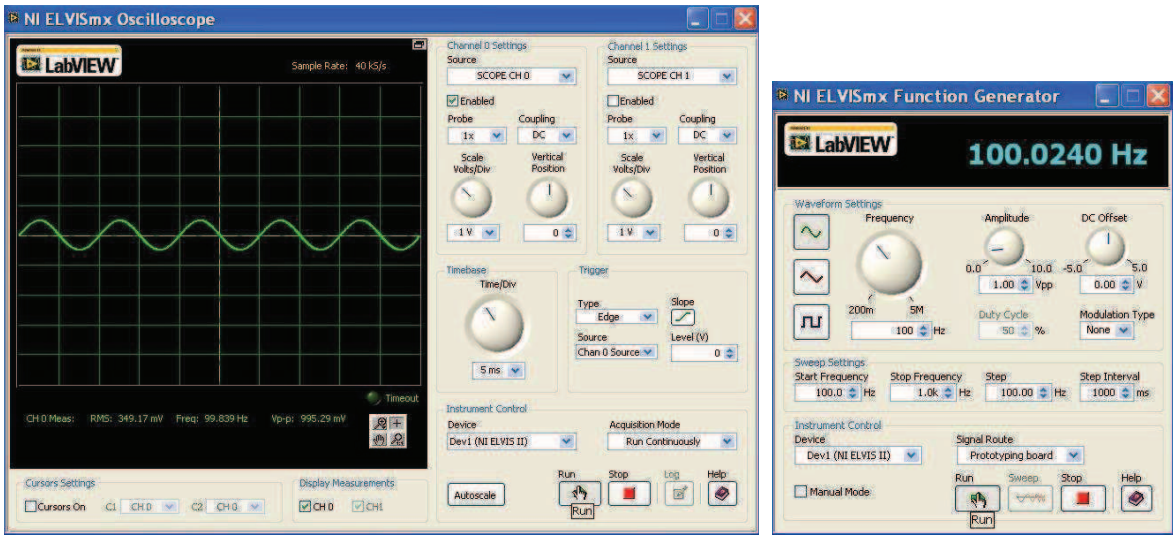

Figure 9

21. Try adjusting the function generator's **hard** *Amplitude* control on the right side of the NI ELVIS II and note the scope's display as you do.

    Note: For the same reasons as before, you'll find that the function generator's hard controls have no effect over its output.

22. Vary the function generator's **soft** *Amplitude* control (by grabbing and turning the knob on-screen in the same way as you did for the Variable Power Supplies) and observe the effect on the scope's display.

    Note: This time you should find that the output voltage changes. If not, call the instructor for assistance.

23. Vary the function generator's soft *Frequency* control and observe the effect.

24. Select the other *Waveform* options and observe the effect.

25. Set the scope's Channel 0 *Coupling* control to the *DC* position.

26. Vary the function generator's soft *DC Offset* control and observe the effect.

27. Adjust the function generator using its soft controls for an output with the following specifications:

    Waveshape: Triangular
    Frequency: 2.5kHz
    Amplitude: 4Vpp
    DC Offset: 0.5V

    Tip: To obtain exactly 2.5kHz at 4Vpp, simply type these values in the space provided below the corresponding knobs.

28. Make the appropriate adjustments to the scope's controls to display the waveform.



Ask the instructor to check your work before continuing.

An important fact about the NI ELVIS II & DATEx

On the bottom right corner of the function generator VI there is another changeable option called "Signal Route". This option defaults to "Prototyping board" meaning that the function generator's output is available on the DATEx board as demonstrated by this experiment. This is how almost all DATEx experiments access the function generator so "prototyping board" is the preferred signal route option unless otherwise specified.

For your information, the other signal route option is called "FGEN BNC". This outputs the function generator to the BNC connector marked FGEN on the top left side of the NI ELVIS II. However, this connector has a dual use and doubles as the external trigger input (*TRIG*) to the scope. Selecting the "FGEN BNC" signal route will cause conflicts when using the scope's external trigger option so it is best to avoid doing so.

Part B – Soft control of the Emona DATEx

29. Close the function generator's VI.

30. Connect the set-up shown in Figure 10 below.

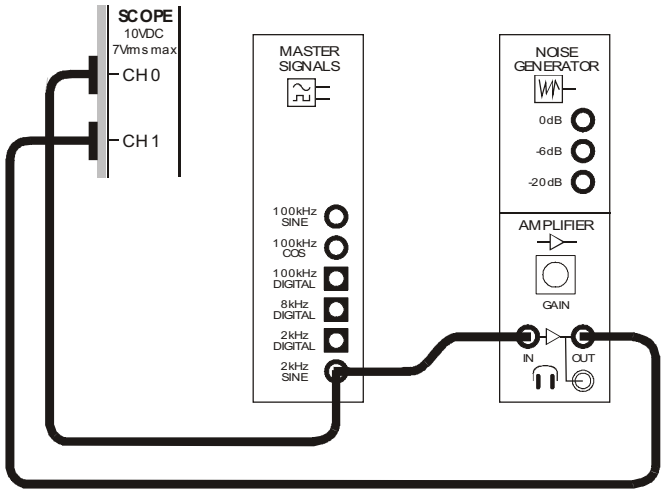

Figure 10

31. Adjust the scope's *Timebase* control to view only two or so cycles of the Master Signals module's *2kHz SINE* output.

32. Activate the scope's Channel 1 input by checking the Channel 1 *Enabled* box.

33. Verify the operation of the Amplifier module by varying its **hard** *Gain* control.

    Note: If the amplifier is working correctly, its output should be inverted and adjusting its *Gain* control should vary its amplitude.

34. Launch the DATEx soft front-panel (SFP) per the instructor's directions.

    Note 1: On successfully launching the DATEx SFP, the window in Figure 11 on the next page should be visible.

    Note 2: There is no need to "run" the DATEx SFP as it launches running.

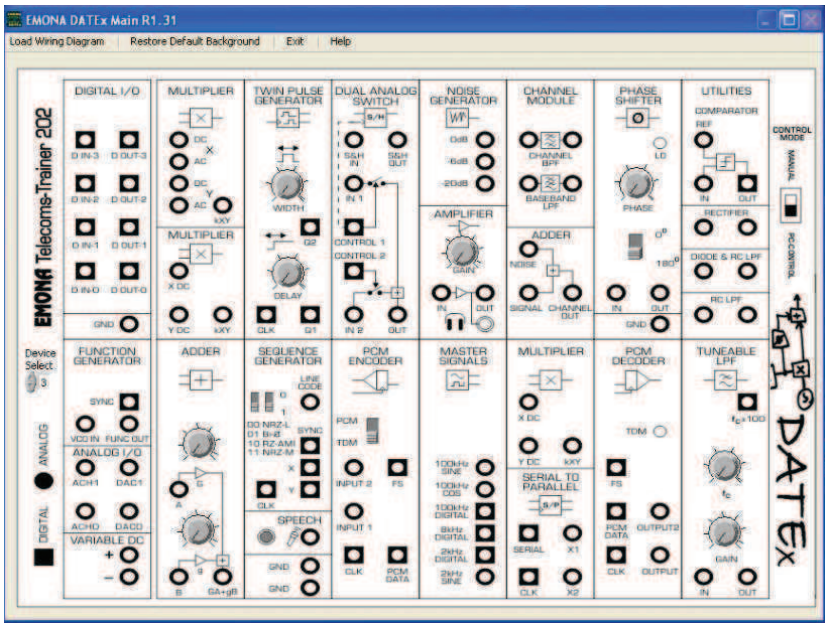

Figure 11

Setting the DATEx SFP to the current Device number

The ELVIS unit you are using can be set up to have a particular Device number. You need to ensure that the DATEx SFP is also set to the same Device number as your ELVIS unit. The DATEx SFP can be set to numbers 1-8.

In the bottom right corner of the DATEx SFP is a Device selection box. Set it to the same device number as is your ELVIS unit. If the DATEx SFP is not set to the correct ELVIS number you will get an error dialog box. Simply dismiss the dialog, set the device number correctly and re-start the SFP.

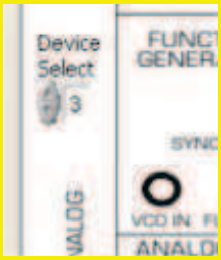

In this example screenshot we can see the SFP set to Device number 3.

 © 2008 Emona Instruments

35. Adjust the positions of the DATEx SFP window and the scope's VI so that you're able to view the essential parts of both. An example is shown in Figure 12 below.

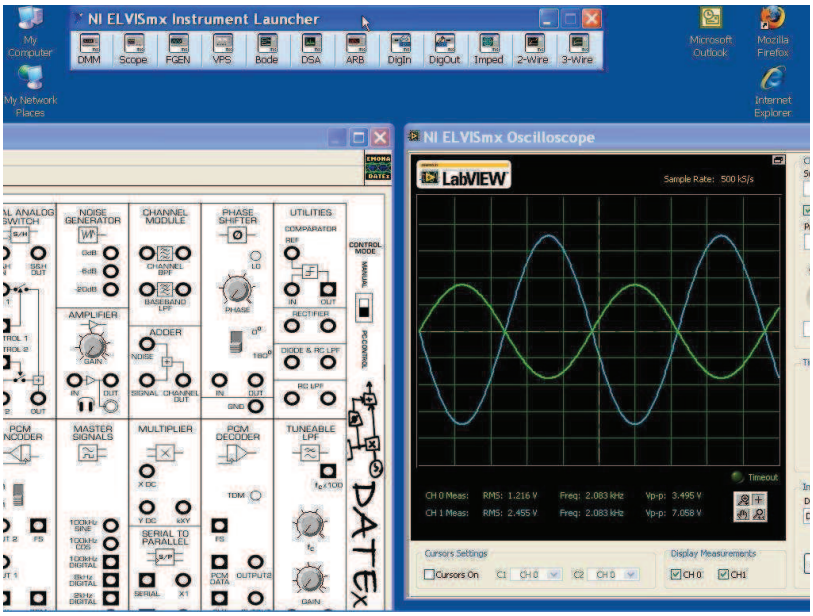

Figure 12

36. Switch the DATEx module's *Control Mode* switch (top right-hand corner) to the *PC Control* position.

37. Vary the Amplifier module's **hard** *Gain* control again.

    Note: This time it'll have no effect on the output signal.

38. Vary the Amplifier module's **soft** *Gain* control using the DATEx SFP and the mouse.

    Note: You should find that you now have soft control over the DATEx.

39. Use the Amplifier module's soft *Gain* control to set its voltage gain to as close to -2 as you can get.

If you find fine adjustments using the mouse are tricky, the DATEx SFP allows you to make changes to its soft controls using the PC's keyboard. The following instructions show you how.

40. Reposition the DATEx SFP window so that you can see all of its modules.

41. Press the keyboard's *TAB* key once.

Note: The *Width* control on the DATEx SFP's Twin Pulse Generator can now be adjusted using the keyboard and this is highlighted by a box around it.

42. Press the *TAB* key a few more times.

    Note: Notice that each time you press the *TAB* key the selected control changes. Notice also that switches can be selected as wells as knobs.

43. Use the *TAB* key to select the Amplifier module's soft *Gain* control.

44. Reposition the DATEx SFP window so that you can see the scope's display.

45. Vary the soft *Gain* control by pressing the keyboard's left and right arrow keys.

    Note: You'll have to watch the soft *Gain* control very closely to see it move because the adjustments are very fine.

46. Use the arrow keys to set the Amplifier module's voltage gain to as close to -2 as you can get.



Ask the instructor to check your work before continuing.

47. Connect the set-up shown in Figure 13 below.

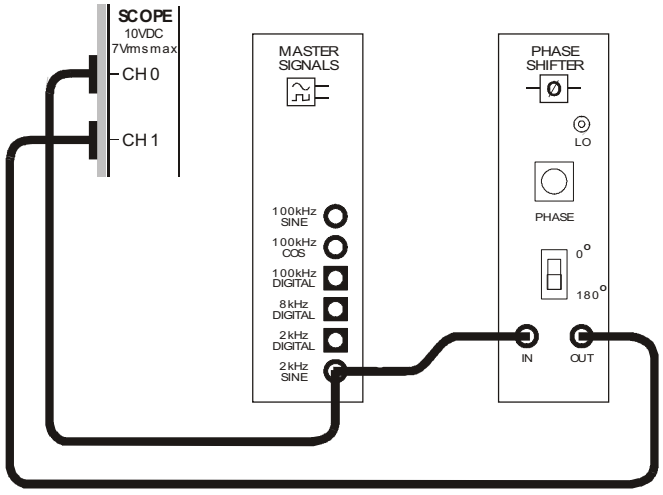

Figure 13

48. Experiment with adjusting the Phase Shifter module's two soft controls while watching its input and output signals on the scope's display.

    Note 1: Use the mouse and the keyboard to do this.

    Note 2: See if you can work out which key on the keyboard toggles the Phase Shifter module's switch between the *0°* and *180°* positions.

49. Adjust the Phase Shifter module for an output signal with a phase shift that is as close to 180° as you can get.



Ask the instructor to check your work before finishing.

Loading pre-wired DATEx SFP backgrounds

The DATEx SFP background has the ability to be loaded with custom-made backgrounds. This can be used to load a "pre-wired" background which matches the experiment you are currently doing. As well, a background with notes from the instructor can be loaded if required.

As the loadable backgrounds are simply image files (jpg, bmp), any changes can be made as required by the user or instructor, using the template background file supplied.

As well, a directory of pre-wired experiment backgrounds corresponding to every wiring diagram in this manual is also supplied on the DATEX CD. Your instructor can advise you as to where these files can be found if required.

How to use pre-wired backgrounds:
"Load Wiring Diagram" : Select a background file (jpg, bmp) to load
"Restore Default Background" : Load the supplied default un-wired background
"Exit" : Exit the DATEx SFP
"Help" : Load the Help screen (html)

Upon restart the DATEx SFP will always load the default background.
A pre-wired background corresponding to Figure 13 of this chapter is shown below as Figure 14.

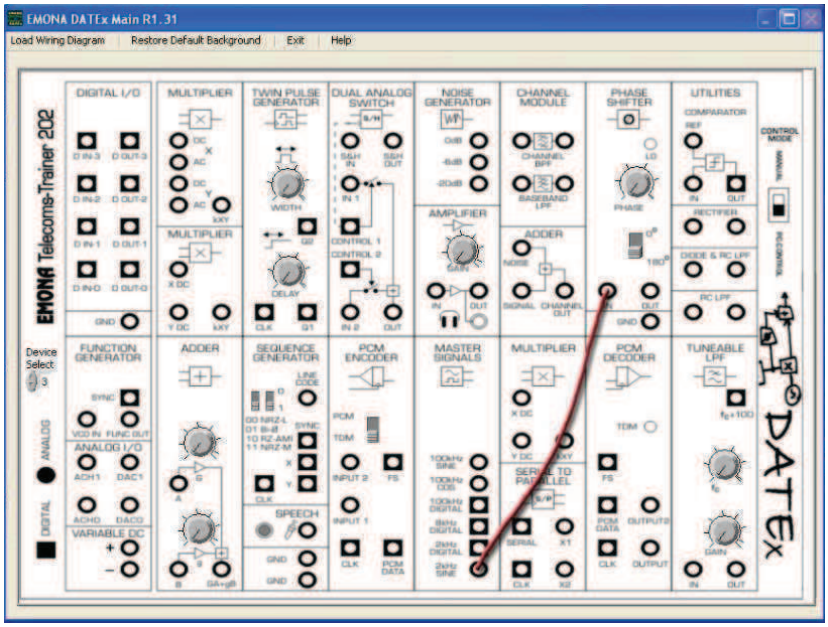

Figure 14

 © 2008 Emona Instruments

Figure 15 shows one of the supplied pre-wired backgrounds loaded into the DATEx SFP. In this example it is the wiring relating to Experiment 17, Figure 8 of the DATEx Lab Manual.
The different colors are used to distinguish between the various stages of wiring during the experiment itself.

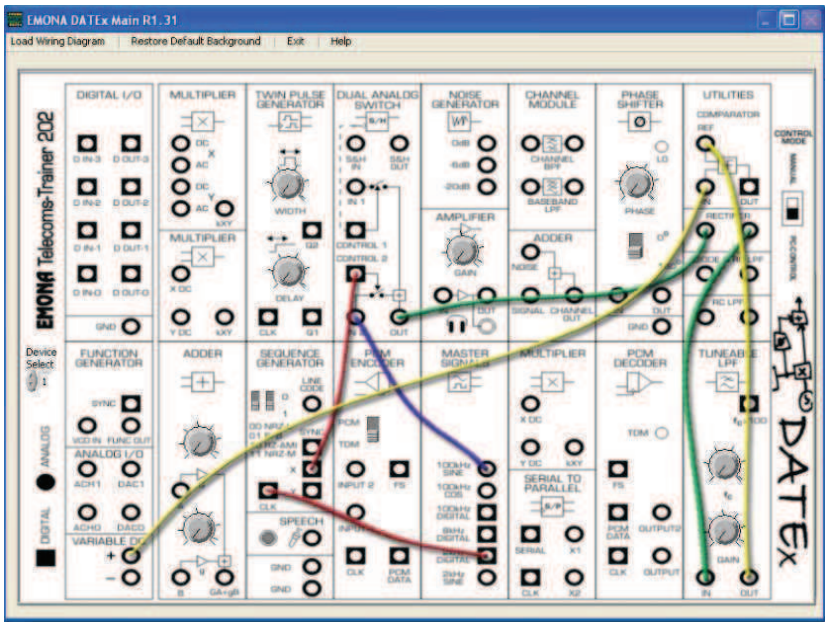

Figure 15

The loadable backgrounds can also be easily edited to include annotations the teacher may wish to add. In this example is shown a pre-wired background loaded into the SFP and including some advisory comments to students who would be doing this experiment.

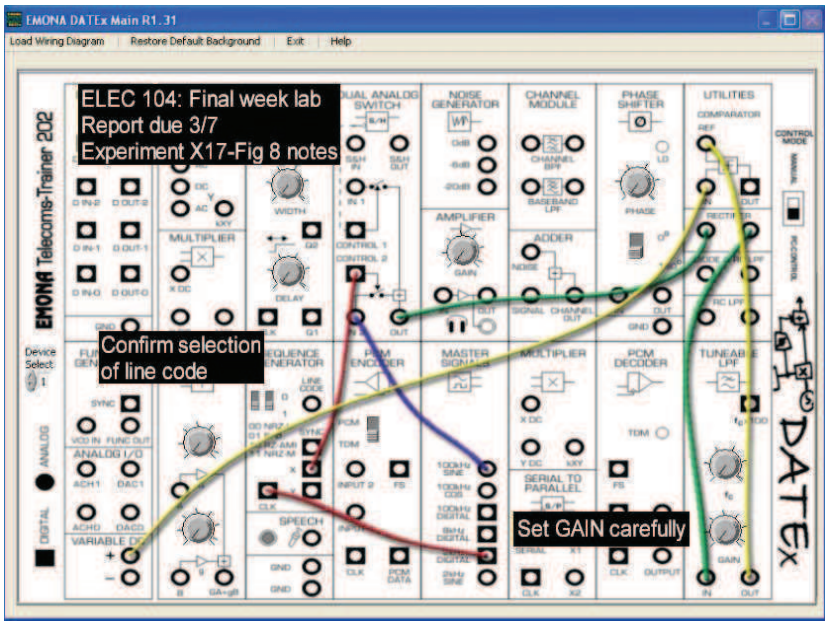

Figure 16

Name: _____

Class: _____

4 - Using the Emona DATEx to model equations

Experiment 4 – Using the Emona DATEx to model equations

Preliminary discussion

This may surprise you, but mathematics is an important part of electronics and this is especially true for communications and telecommunications. As you'll learn, the output of all communications systems can be described mathematically with an equation.

Although the math that you'll need for this manual is relatively light, there is some. Helpfully, the Emona DATEx can model communications equations to bring them to life.

The experiment

This experiment will introduce you to modelling equations by using the Emona DATEx to implement two relatively simple equations.

It should take you about 40 minutes to complete this experiment.

Equipment

- Personal computer with appropriate software installed
- NI ELVIS II plus USB cable and power pack
- Emona DATEx experimental add-in module
- Two BNC to 2mm banana-plug leads
- Assorted 2mm banana-plug patch leads

Something you need to know for the experiment

This box contains the definition for an electrical term used in this experiment. Although you've probably seen it before, it's worth taking a minute to read it to check your understanding.

When two signals are **180° out of phase**, they're out of step by half a cycle. This is shown in Figure 1 below. As you can see, the two signals are always travelling in opposite directions. That is, as one goes up, the other goes down (and vice versa).

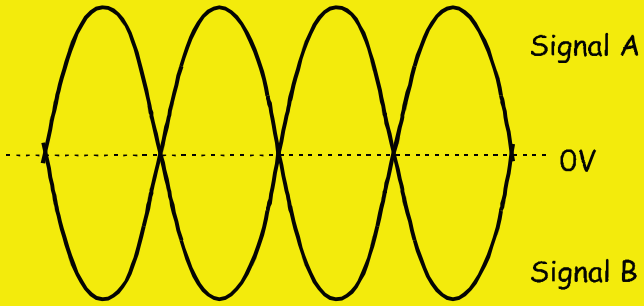

Figure 1

© 2008 Emona Instruments

Procedure

In this part of the experiment, you're going to use the Adder module to add two electrical signals together. Mathematically, you'll be implementing the equation:

Adder module output = Signal A + Signal B

1. Ensure that the NI ELVIS II power switch at the back of the unit is off.

2. Carefully plug the Emona DATEx experimental add-in module into the NI ELVIS II.

3. Set the *Control Mode* switch on the DATEx module (top right corner) to *PC Control*.

4. Connect the NI ELVIS II to the PC using the USB cable.

   Note: This may already have been done for you.

5. Turn on the NI ELVIS II power switch at the rear of the unit then turn on its *Prototyping Board Power* switch at the top right corner near the power indicator.

6. Turn on the PC and let it boot-up.

7. Launch the NI ELVISmx software.



Ask the instructor to check your work before continuing.

8. Launch and run the NI ELVIS II Oscilloscope virtual instrument (VI).

9. Set up the scope per the procedure in Experiment 1 (page 1-12) ensuring that the *Trigger Source* control is set to *CH 0*.

10. Launch the DATEx soft front-panel (SFP).

11. Check you now have soft control over the DATEx by activating the PCM Encoder module's **soft** *PDM/TDM* control on the DATEx SFP.

    Note: If you're set-up is working correctly, the PCM Decoder module's LED on the DATEx board should turn on and off.

12. Locate the Adder module on the DATEx SFP and set its soft *G* and *g* controls to about the middle of their travel.

13. Connect the set-up shown in Figure 2 below.

    Note: Although not shown, insert the black plugs of the oscilloscope leads into a ground (*GND*) socket.

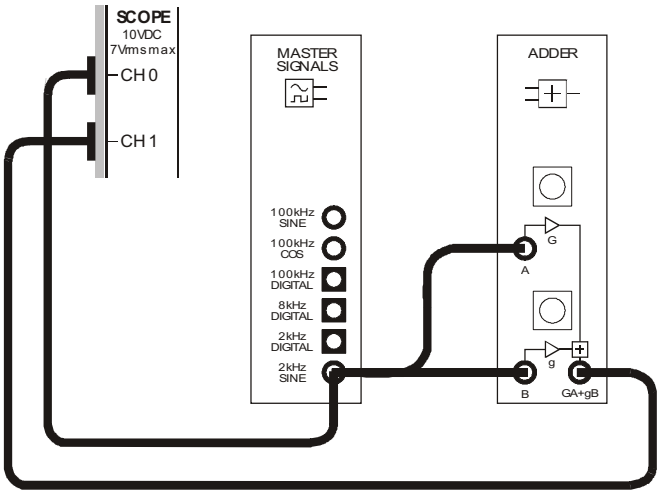

Figure 2

This set-up can be represented by the block diagram in Figure 3 below.

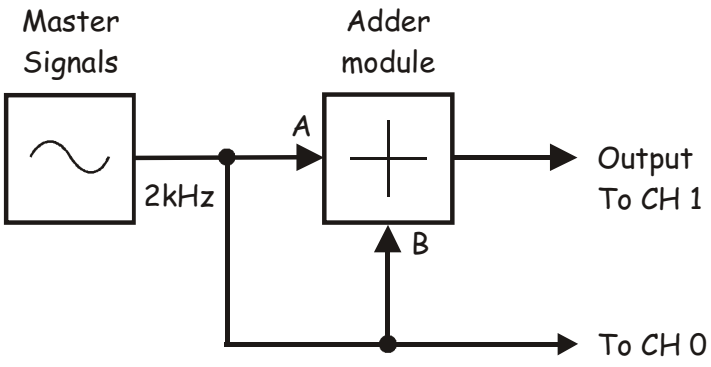

Figure 3

14. Adjust the scope's *Timebase* control to view two or so cycles of the Master Signals module's *2kHz SINE* output.

15. Measure the amplitude (peak-to-peak) of the Master Signals module's *2kHz SINE* output. Record your measurement in Table 1 on the next page.

16. Disconnect the lead to the Adder module's *B* input.

17. Activate the scope's Channel 1 input by checking the Channel 1 *Enabled* box to observe the Adder module's output as well as its input.

18. Adjust the Adder module's soft *G* control until its output voltage is the same size as its input voltage (measured in Step 15).

    Note 1: This makes the gain for the Adder module's *A* input -1.

    Note 2: Remember that you can use the keyboard's *TAB* and arrow keys for fine adjustment of the DATEx SFP's controls.

19. Reconnect the lead to the Adder module's *B* input.

20. Disconnect the lead to the Adder module's *A* input.

21. Adjust the Adder module's soft *g* control until its output voltage is the same size as its input voltage (measured in Step 15).

    Note: This makes the gain for the Adder module's *B* input -1 and means that the Adder module's two inputs should have the same gain.

22. Reconnect the lead to the Adder module's *A* input.

The set-up shown in Figures 3 and 4 is now ready to implement the equation:

Adder module output = Signal A + Signal B

Notice though that the Adder module's two inputs are the same signal: a 4Vp-p 2kHz sinewave. So, for these inputs the equation becomes:

Adder module output = 4Vp-p (2kHz sine) + 4Vp-p (2kHz sine)

When the equation is solved, we get:

Adder module output = 8Vp-p (2kHz sine)

Let's see if this is what happens in practice.

23. Measure and record the amplitude of the Adder module's output.

Table 1

Input voltage	Output voltage

Question 1
Is the Adder module's measured output voltage **exactly** 8Vp-p as theoretically predicted?

Question 2
What are two reasons for this?



Ask the instructor to check your work before continuing.

© 2008 Emona Instruments

In the next part of the experiment, you're going to add two electrical signals together but one of them will be phase shifted. Mathematically, you'll be implementing the equation:

Adder module output = Signal A + Signal B (with phase shift)

24. Locate the Phase Shifter module on the DATEx SFP and set its soft *Phase Change* control to the *0°* position.

25. Set the Phase Shifter module's soft *Phase Adjust* control about the middle of its travel.

26. Connect the set-up shown in Figure 4 below.

    Note: Insert the black plugs of the oscilloscope leads into a ground (*GND*) socket.

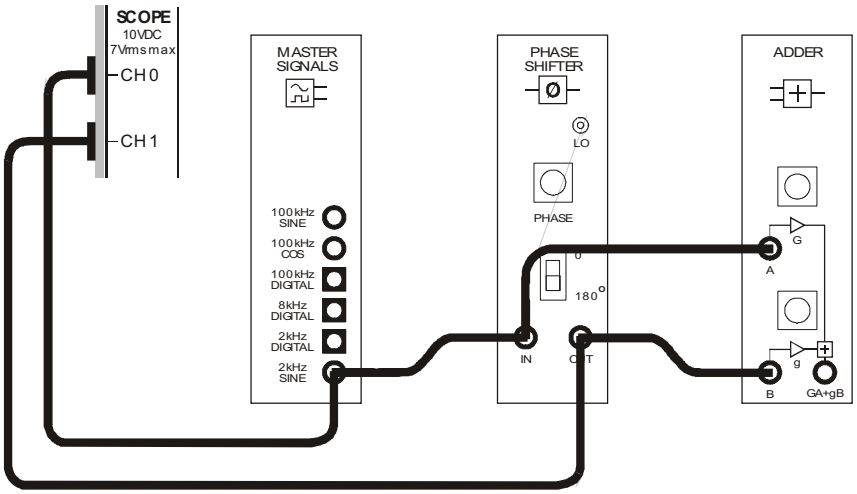

Figure 4

This set-up can be represented by the block diagram in Figure 5 on the next page.

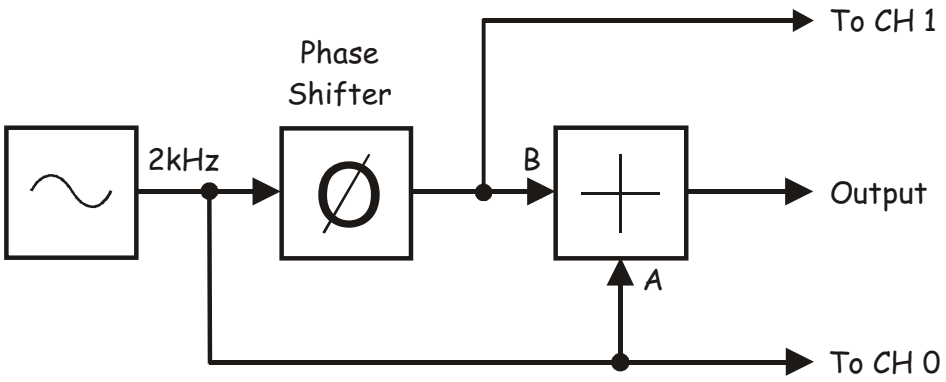

Figure 5

The set-up shown in Figures 4 and 5 is now ready to implement the equation:

Adder module output = Signal A + Signal B (with phase shift)

The Adder module's two inputs are still the same signal: a 4Vp-p 2kHz sinewave. So, with values the equation is:

Adder module output = 4Vp-p (2kHz sine) + 4Vp-p (2kHz sine with phase shift)

As the two signals have the same amplitude and frequency, if the phase shift is exactly 180° then their voltages at any point in the waveform is always exactly opposite. That is, when one sinewave is +1V, the other is -1V. When one is +3.75V, the other is -3.75V and so on. This means that, when the equation above is solved, we get:

Adder module output = 0Vp-p

Let's see if this is what happens in practice.

27. Adjust the Phase Shifter module's soft *Phase Adjust* control until its input and output signals look like they're about 180° out of phase with each other.

28. Disconnect the scope's Channel 1 lead from the Phase Shifter module's output and connect it to the Adder module's output.

29. Adjust Channel 1's *Scale* control to resize the signal on the display.

30. Measure the amplitude of the Adder module's output. Record your measurement in Table 2 below.

Table 2

Output voltage

Question 3

What are two reasons for the output not being 0V as theoretically predicted?



Ask the instructor to check your work before continuing.

The following procedure can be used to adjust the Adder and Phase Shifter modules so that the set-up has a *null* output. That is, an output that is close to zero volts.

31. Use the keyboard's *TAB* and arrow keys to vary the Phase Shifter module's soft *Phase Adjust* control left and right a little and observe the effect on the Adder module's output.

32. Use the keyboard to make the necessary fine adjustments to the Phase Shifter module's soft *Phase Adjust* control to obtain the smallest output voltage from the Adder module.

Question 5
What can be said about the phase shift between the signals on the Adder module's two inputs now?

---

33. Use the keyboard to vary the Adder module's soft *g* control left and right a little and observe the effect on the Adder module's output.

34. Use the keyboard to make the necessary fine adjustments to the Adder module's soft *g* control to obtain the smallest output voltage.

Question 6
What can be said about the gain of the Adder module's two inputs now?

You'll probably find that you'll not be able to null the Adder module's output completely. Unfortunately, real systems are never perfect and so they don't behave exactly according to theory. As such, it's important for you to learn to recognise these limitations, understand their origins and quantify them where necessary.



Ask the instructor to check your work before finishing.

 © 2008 Emona Instruments

Name: _____

Class: _____

5 - Amplitude modulation (AM)

Experiment 5 – Amplitude modulation

Preliminary discussion

In an amplitude modulation (AM) communications system, speech and music are converted into an electrical signal using a device such as a microphone. This electrical signal is called the *message* or *baseband* signal. The message signal is then used to electrically vary the amplitude of a pure sinewave called the *carrier*. The carrier usually has a frequency that is much higher than the message's frequency.

Figure 1 below shows a simple message signal and an unmodulated carrier. It also shows the result of amplitude modulating the carrier with the message. Notice that the modulated carrier's amplitude varies above and below its unmodulated amplitude.

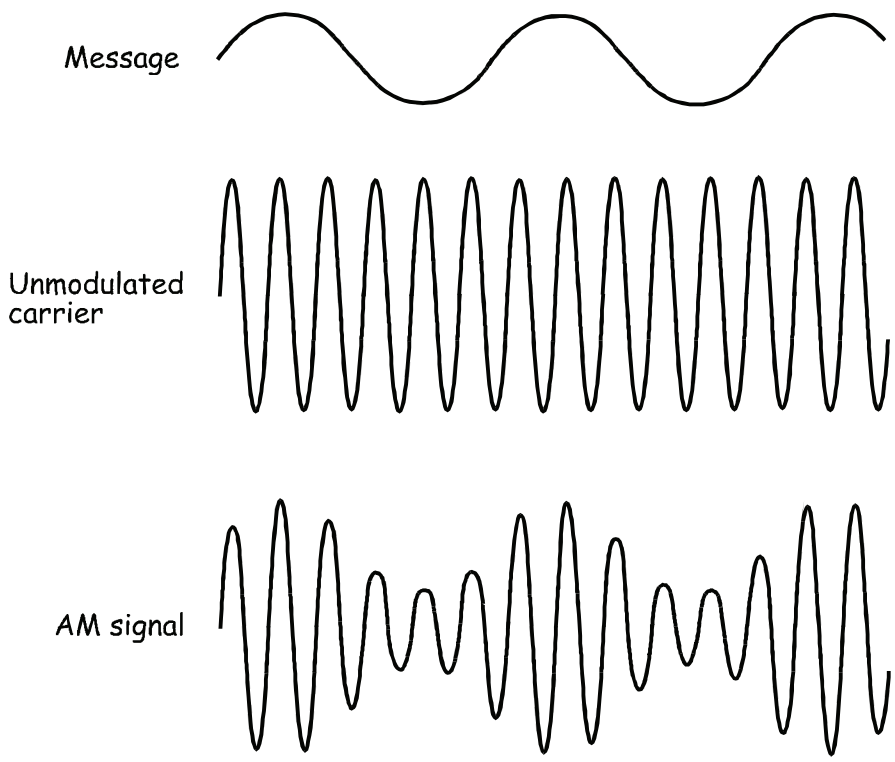

Figure 1

Figure 2 below shows the AM signal at the bottom of Figure 1 but with a dotted line added to track the modulated carrier's positive peaks and negative peaks. These dotted lines are known in the industry as the signal's *envelopes*. If you look at the envelopes closely you'll notice that the upper envelope is the same shape as the message. The lower envelope is also the same shape but upside-down (inverted).

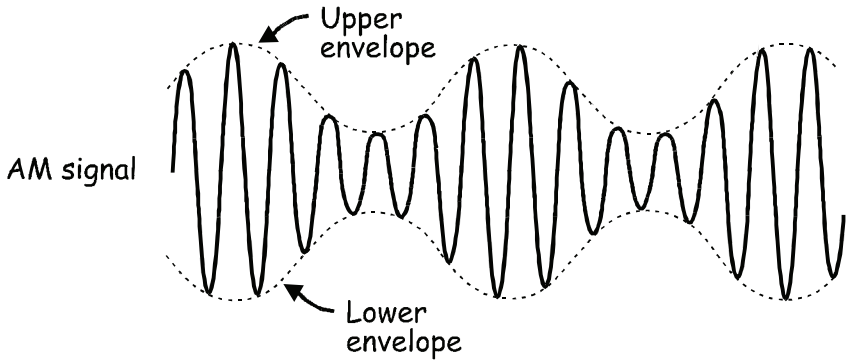

Figure 2

In telecommunications theory, the mathematical model that defines the AM signal is:

$$AM = (DC + message) \times the\ carrier$$

When the message is a simple sinewave (like in Figure 1) the equation's solution (which necessarily involves some trigonometry that is not shown here) tells us that the AM signal consists of three sinewaves:

- One at the carrier frequency
- One with a frequency equal to the sum of the carrier and message frequencies
- One with a frequency equal to the difference between the carrier and message frequencies

In other words, for every sinewave in the message, the AM signal includes a pair of sinewaves – one above and one below the carrier's frequency. Complex message signals such as speech and music are made up of thousands sinewaves and so the AM signal includes thousands of pairs of sinewaves straddling carrier. These two groups of sinewaves are called the *sidebands* and so AM is known as *double-sideband, full carrier* (DSBFC).

Importantly, it's clear from this discussion that the AM signal doesn't consist of any signals at the message frequency. This is despite the fact that the AM signal's envelopes are the same shape as the message.

The experiment

For this experiment you'll use the Emona DATEx to generate a real AM signal by implementing its mathematical model. This means that you'll add a DC component to a pure sinewave to create a message signal then multiply it with another sinewave at a higher frequency (the carrier). You'll examine the AM signal using the scope and compare it to the original message. You'll do the same with speech for the message instead of a simple sinewave.

Following this, you'll vary the message signal's amplitude and observe how it affects the modulated carrier. You'll also observe the effects of modulating the carrier too much. Finally, you'll measure the AM signal's depth of modulation using a scope.

It should take you about 1 hour to complete this experiment.

Equipment

- Personal computer with appropriate software installed
- NI ELVIS II plus USB cable and power pack
- Emona DATEx experimental add-in module
- Two BNC to 2mm banana-plug leads
- Assorted 2mm banana-plug patch leads

Procedure

Part A - Generating an AM signal using a simple message

1. Ensure that the NI ELVIS II power switch at the back of the unit is off.

2. Carefully plug the Emona DATEx experimental add-in module into the NI ELVIS II.

3. Set the *Control Mode* switch on the DATEx module (top right corner) to *PC Control*.

4. Connect the NI ELVIS II to the PC using the USB cable.

   Note: This may already have been done for you.

5. Turn on the NI ELVIS II power switch at the rear of the unit then turn on its *Prototyping Board Power* switch at the top right corner near the power indicator.

6. Turn on the PC and let it boot-up.

7. Launch the NI ELVISmx software.



Ask the instructor to check your work before continuing.

8. Launch the NI ELVIS II Variable Power Supplies VI and click on its *Run* control to activate the hardware.

9. Adjust the Variable Power Supplies negative output *Voltage* control for an output of about -6V (the exact value is not critical).

10. You won't need to adjust the Variable Power Supplies VI again so minimise it (but don't close it).

11. Connect the set-up shown in Figure 3 below.

    Note: The NI ELVIS II DMM's inputs are on the left side of the unit.

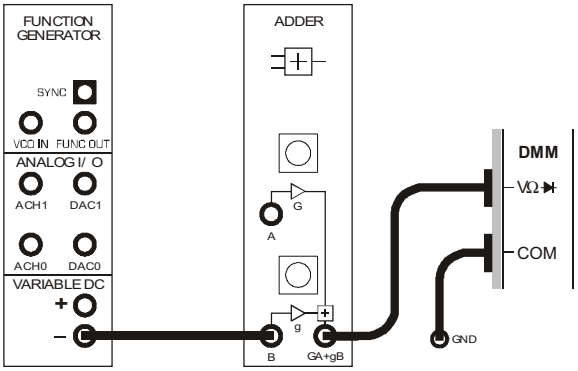

Figure 3

12. Launch the NI ELVIS II DMM VI and press its *Run* button to activate its hardware.

13. Set up the DMM for measuring DC voltages.

14. Launch the DATEx soft front-panel (SFP).

15. Check you have soft control over the DATEx by activating the PCM Encoder module's **soft** *PDM/TDM* control on the DATEx SFP.

    Note: If you're set-up is working correctly, the PCM Decoder module's LED on the DATEx board should turn on and off.

16. Locate the Adder module on the DATEx SFP and turn its soft *G* control fully anti-clockwise.

17. Adjust the Adder module's soft *g* control to obtain a 1V DC output (as measured by the DMM).

18. Close the DMM VI – you'll not need it again (unless you accidentally change the Adder module's soft *g* control).

19. Connect the set-up shown in Figure 4 below.

Note 1: The NI ELVIS II scope inputs are on the left side of the unit.

Note 2: Insert the black plugs of the oscilloscope lead into a ground (*GND*) socket.

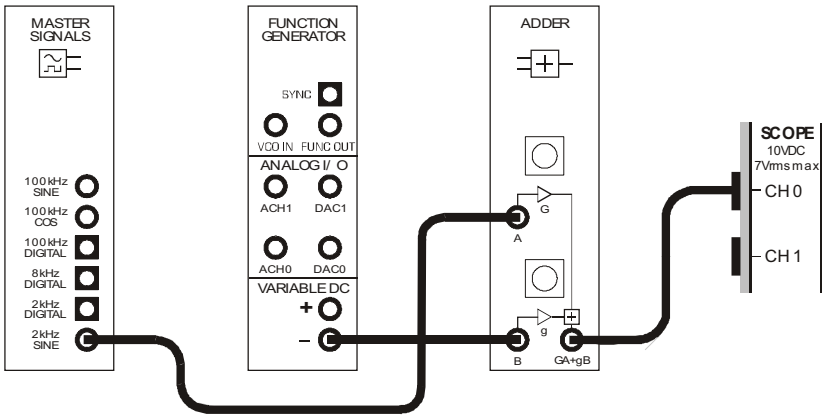

Figure 4

This set-up can be represented by the block diagram in Figure 5 below. It implements the highlighted part of the equation: AM = **(DC + message)** × the carrier.

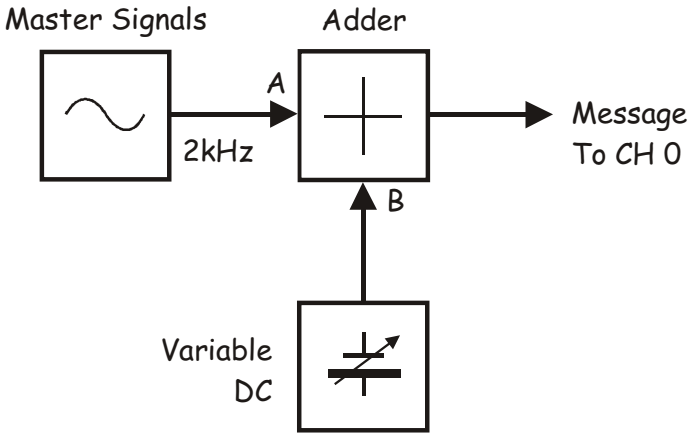

Figure 5

20. Launch and run the NI ELVIS II Oscilloscope VI.

21. Set up the scope per the procedure in Experiment 1 (page 1-12) with the following changes:

    - Channel 0 *Coupling* control to the *DC* position instead of *AC*
    - Channel 0 *Scale* control to the *500mV/div* position instead of *1V/div*
    - *Trigger Level* control to the *1V* position instead of *0V*

At the moment, the scope's display wont have a trace and there should be a message at the top stating, "***Waiting for Trigger***". This situation is normal and will be corrected when you perform the next step.

22. While watching the Adder module's output on the scope, turn its soft *G* control clockwise to obtain a 1Vp-p sinewave.

    Tip: Remember that you can use the keyboard's *TAB* and arrow keys for fine adjustment of the DATEx SFP's controls.

The Adder module's output can now be described mathematically as:

AM = (1VDC + 1Vp-p 2kHz sine) × the carrier

Question 1
In what way is the Adder module's output now different to the signal out of the Master Signals module's *2kHz SINE* output?



Ask the instructor to check your work before continuing.

23. Modify the set-up as shown in Figure 6 below.

Before you do…
The set-up in Figure 6 builds on Figure 4 so don't pull it apart. Existing wiring is shown as dotted lines to highlight the patch leads that you need to add.

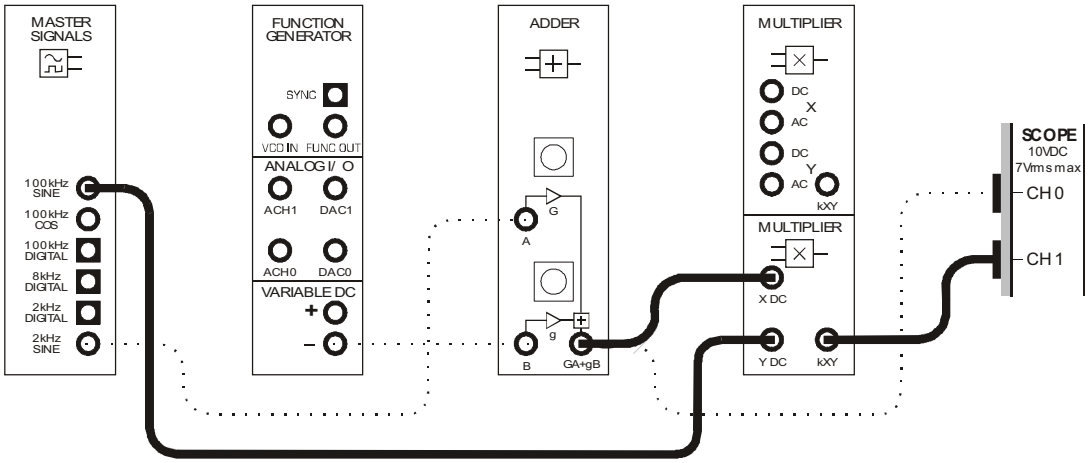

Figure 6

This set-up can be represented by the block diagram in Figure 7 below. The additions that you've made to the original set-up implement the highlighted part of the equation:
AM = (DC + message) **× the carrier**.

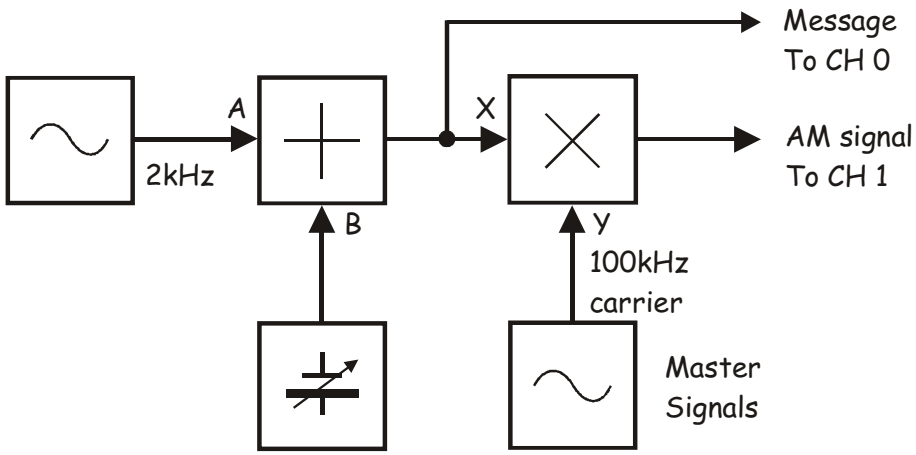

Figure 7

 © 2008 Emona Instruments

With values, the equation on the previous page becomes:

AM = (1VDC + 1Vp-p 2kHz sine) × 4Vp-p 100kHz sine.

24. Adjust the scope's *Timebase* control to view only two or so cycles of the message signal.

25. Activate the scope's Channel 1 input (by checking the Channel 1 *Enabled* box) to view the Multiplier module's output as well as the message signal.

26. Draw the two waveforms to scale on the graph provided below.

    Tip: Draw the message signal in the upper half of the graph and the AM signal in the lower half.





Ask the instructor to check your work before continuing.

27. Use the scope's Channel 0 *Position* control to overlay the message with the AM signal's upper envelope then lower envelope to compare them.

Tip: If you haven't do so already, set the Channel 1 *Scale* control to *500mV/div*.

Question 2
What feature of the Multiplier module's output suggests that it's an AM signal? **Tip:** If you're not sure about the answer to the questions, see the preliminary discussion.

Question 3
The AM signal is a complex waveform consisting of more than one signal. Is one of the signals a 2kHz sinewave? Explain your answer.

Question 4
For the given inputs to the Multiplier module, how many sinewaves does the AM signal consist of, and what are their frequencies?



Ask the instructor to check your work before continuing.

© 2008 Emona Instruments

Part B - Generating an AM signal using speech

This experiment has generated an AM signal using a sinewave for the message. However, the message in commercial communications systems is much more likely to be speech and music. The next part of the experiment lets you see what an AM signal looks like when modulated by speech.

28. Disconnect the plug on the Master Signals module's *2kHz SINE* output that connects to the Adder module's *A* input.

29. Connect it to the Speech module's output as shown in Figure 8 below.

    Remember: Dotted lines show leads already in place.

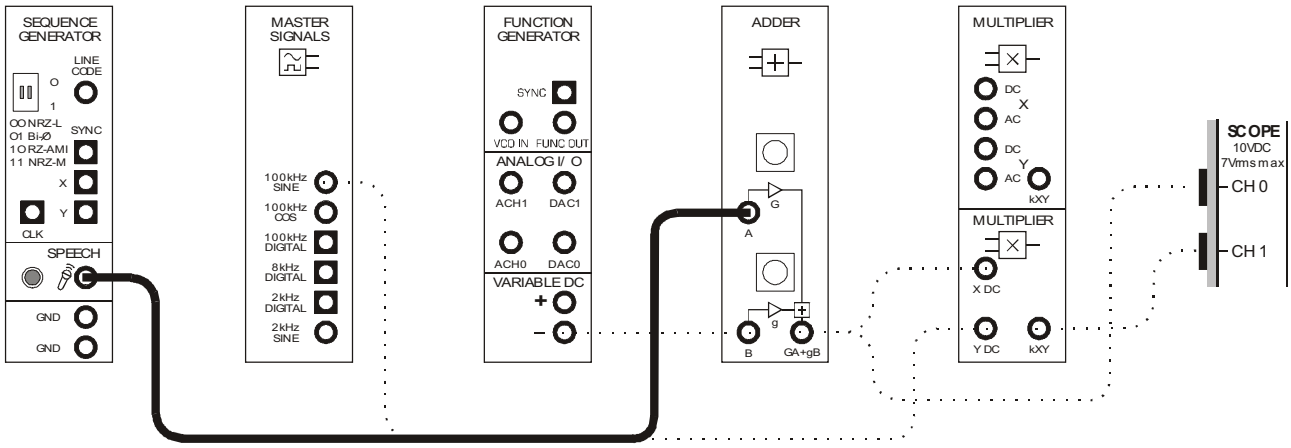

Figure 8

30. Set the scope's *Timebase* control to the *1ms/div* position.

31. Hum and talk into the microphone while watching the scope's display.

Question 5

Why is there still a signal out of the Multiplier module even when you're not humming (or talking, etc)?



Ask the instructor to check your work before continuing.

Part C – Investigating depth of modulation

It's possible to modulate the carrier by different amounts. This part of the experiment let's you investigate this.

32. Return the scope's *Timebase* control to the *100µs/div* position.

33. Disconnect the plug to the Speech module's output and reconnect it to the Master Signals module's *2kHz SINE* output.

    Note: The scope's display should now look like your drawings on the graph paper on page 5-10.

34. Vary the message signal's amplitude a little by turning Adder module's soft *G* control left and right and notice the effect on the AM signal.

Question 6

What is the relationship between the message's amplitude and the amount of the carrier's modulation?



Ask the instructor to check your work before continuing.

 © 2008 Emona Instruments

You probably noticed that the size of the message signal and the modulation of the carrier are proportional. That is, as the message's amplitude goes up, the amount of the carrier's modulation goes up.

The extent that a message modulates a carrier is known in the industry as the *modulation index* (m). Modulation index is an important characteristic of an AM signal for several reasons including calculating the distribution of the signal's power between the carrier and sidebands.

Figure 9 below shows two key dimensions of an amplitude modulated carrier. These two dimensions allow a carrier's modulation index to be calculated.

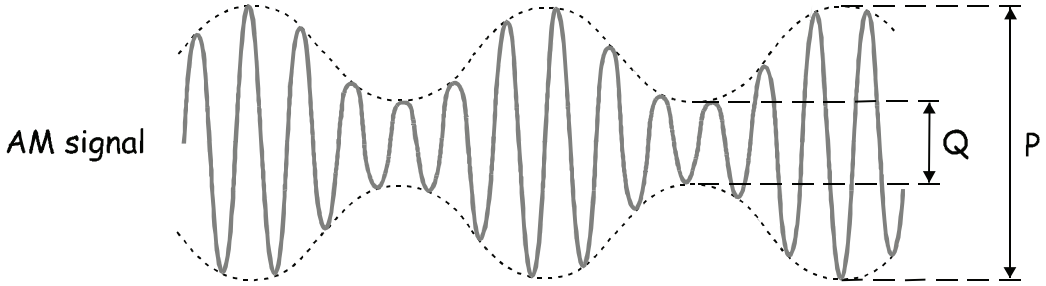

Figure 9

The next part of the experiment lets you practise measuring these dimensions to calculate a carrier's modulation index.

35. Adjust the Adder module's soft *G* control to return the message signal's amplitude to 1Vp-p.

36. Measure and record the AM signal's *P* dimension. Record your measurement in Table 1 below.

37. Measure and record the AM signal's *Q* dimension.

38. Calculate and record the AM signal's depth of modulation using the equation below.

$$m = \frac{P - Q}{P + Q}$$

Table 1

P dimension	Q dimension	m

© 2008 Emona Instruments



Ask the instructor to check your work before continuing.

A problem that is important to avoid in AM transmission is *over-modulation*. When the carrier is over-modulated, it can upset the receiver's operation. The next part of the experiment gives you a chance to observe the effect of over-modulation.

39. Increase the message signal's amplitude to maximum by turning the Adder module's soft *G* control to about half its travel then fully clockwise and notice the effect on the AM signal.

40. Set the scope's Channel 0 *Scale* control to *1V/div* and the Channel 1 *Scale* control to *500mV/div*.

41. Use the scope's Channel 0 *Position* control to overlay the message with the AM signal's envelopes and compare them.

Question 7
What is the problem with the AM signal when it is over-modulated?

Question 8
What do you think is a carrier's maximum modulation index without over-modulation?

- ☐ A minus number
- ☐ 0
- ☐ 1
- ☐ Greater than 1



Ask the instructor to check your work before continuing.

 © 2008 Emona Instruments

42. Draw the two waveforms to scale in the space provided below.





Ask the instructor to check your work before finishing.

Name: _____

Class: _____

6 - DSBSC modulation

Experiment 6 – DSBSC modulation

Preliminary discussion

DSBSC is a modulation system similar but different to AM (which was explored in Experiment 5).

Like AM, DSBSC uses a microphone or some other transducer to convert speech and music to an electrical signal called the *message* or *baseband* signal. The message signal is then used to electrically vary the amplitude of a pure sinewave called the *carrier*. And like AM, the carrier usually has a frequency that is much higher than the message's frequency.

Figure 1 below shows a simple message signal and an unmodulated carrier. It also shows the result of modulating the carrier with the message using DSBSC.

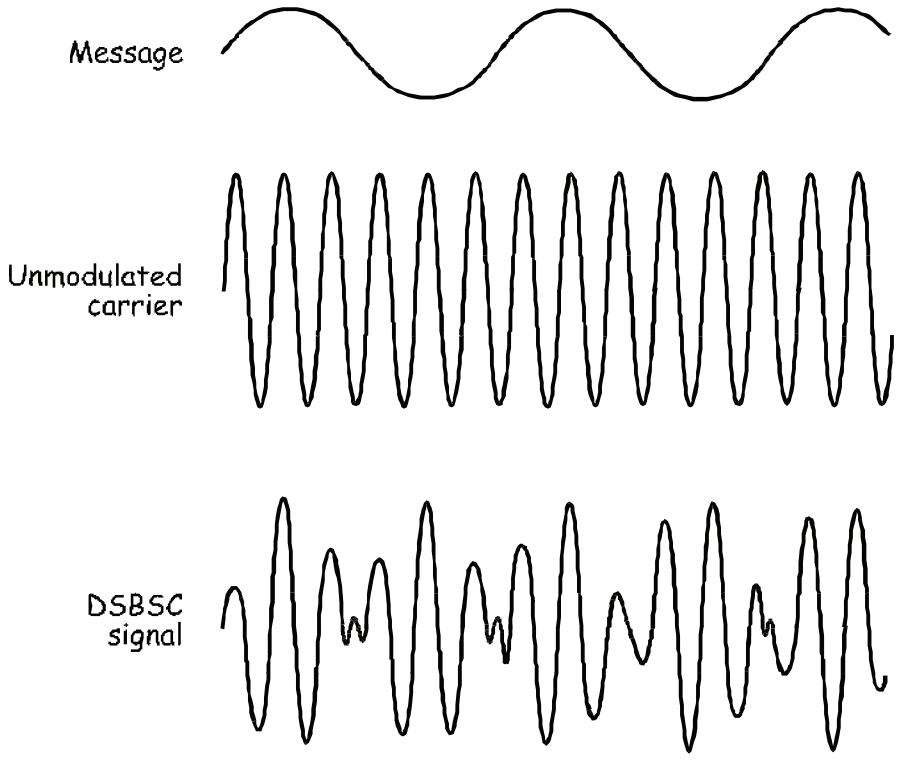

Figure 1

So far, there doesn't appear to be much difference between AM and DSBSC. However, consider Figure 2 below. It is the DSBSC signal at the bottom of Figure 1 but with dotted lines added to track the signal's envelopes (that is, its positive peaks and negative peaks). If you look at the envelopes closely you'll notice that they're not the same shape as the message as is the case with AM (see Experiment 5 page 5-3 for an example).

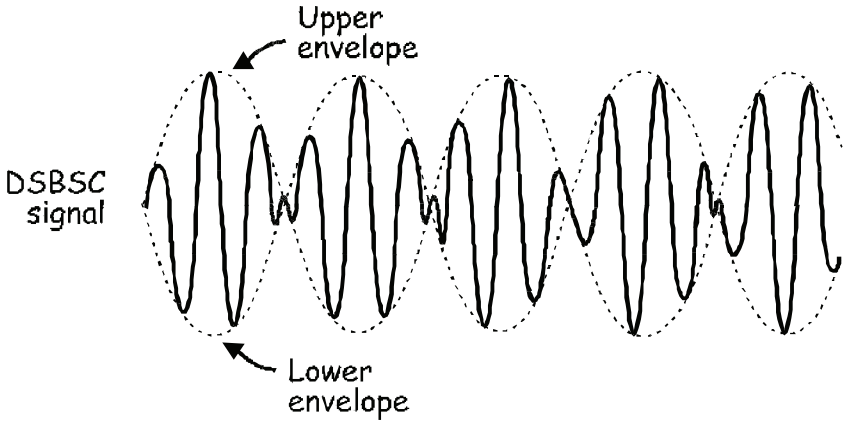

Figure 2

Instead, alternating halves of the envelopes form the same shape as the message as shown in Figure 3 below.

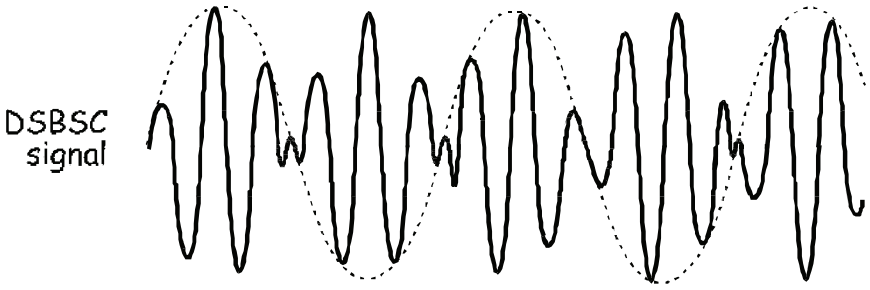

Figure 3

 © 2008 Emona Instruments

Another way that DSBSC is different to AM can be understood by considering the mathematical model that defines the DSBSC signal:

DSBSC = the message × the carrier

Do you see the difference between the equations for AM and DSBSC? If not, look at the AM equation in Experiment 5 (page 5-3).

When the message is a simple sinewave (like in Figure 1) the equation's solution (which necessarily involves some trigonometry) tells us that the DSBSC signal consists of two sinewaves:

- One with a frequency equal to the sum of the carrier and message frequencies
- One with a frequency equal to the difference between the carrier and message frequencies

Importantly, the DSBSC signal doesn't contain a sinewave at the carrier frequency. This is an important difference between DSBSC and AM.

That said, as the solution to the equation shows, DSBSC is the same as AM in that a pair of sinewaves is generated for every sinewave in the message. And, like AM, one is higher than the unmodulated carrier's frequency and the other is lower. As message signals such as speech and music are made up of thousands of sinewaves, thousands of pairs of sinewaves are generated in the DSBSC signal that sit on either side of the carrier frequency. These two groups are called the *sidebands*.

So, the presence of both sidebands but the absence of the carrier gives us the name of this modulation method - ***d**ouble-**s**ideband, **s**uppressed **c**arrier* (DSBSC).

The carrier in AM makes up at least 66% of the signal's power but it doesn't contain any part of the original message and is only needed for tuning. So by not sending the carrier, DSBSC offers a substantial power saving over AM and is its main advantage.

The experiment

For this experiment you'll use the Emona DATEx to generate a real DSBSC signal by implementing its mathematical model. This means that you'll take a pure sinewave (the message) that contains absolutely no DC and multiply it with another sinewave at a higher frequency (the carrier). You'll examine the DSBSC signal using the scope and compare it to the original message. You'll do the same with speech for the message instead of a simple sinewave.

Following this, you'll vary the message signal's amplitude and observe how it affects the carrier's depth of modulation. You'll also observe the effects of modulating the carrier too much.

It should take you about 50 minutes to complete this experiment.

Equipment

- Personal computer with appropriate software installed
- NI ELVIS II plus USB cable and power pack
- Emona DATEx experimental add-in module
- Two BNC to 2mm banana-plug leads
- Assorted 2mm banana-plug patch leads

Procedure

Part A - Generating a DSBSC signal using a simple message

1. Ensure that the NI ELVIS II power switch at the back of the unit is off.

2. Carefully plug the Emona DATEx experimental add-in module into the NI ELVIS II.

3. Set the *Control Mode* switch on the DATEx module (top right corner) to *PC Control*.

4. Connect the NI ELVIS II to the PC using the USB cable.

   Note: This may already have been done for you.

5. Turn on the NI ELVIS II power switch at the rear of the unit then turn on its *Prototyping Board Power* switch at the top right corner near the power indicator.

6. Turn on the PC and let it boot-up.

7. Launch the NI ELVISmx software.

8. Launch and run the NI ELVIS II Oscilloscope virtual instrument (VI).

9. Set up the scope per the procedure in Experiment 1 (page 1-12) ensuring that the *Trigger Source* control is set to *CH 0*.

10. Launch the DATEx soft front-panel (SFP).

11. Check you now have soft control over the DATEx by activating the PCM Encoder module's **soft** *PDM/TDM* control on the DATEx SFP.

    Note: If you're set-up is working correctly, the PCM Decoder module's LED on the DATEx board should turn on and off.

12. Connect the set-up shown in Figure 4 below.

Note: Insert the black plugs of the oscilloscope leads into a ground (*GND*) socket.

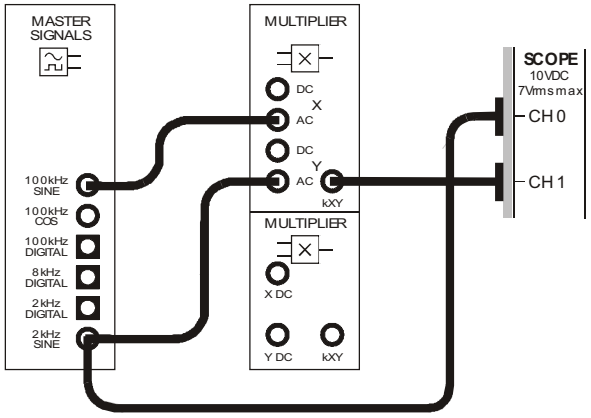

Figure 4

This set-up can be represented by the block diagram in Figure 5 below. It implements the entire equation: DSBSC = the message × the carrier.

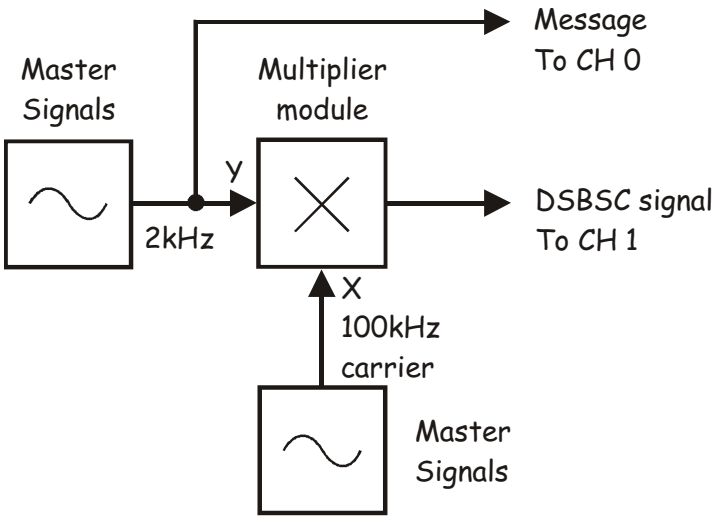

Figure 5

© 2008 Emona Instruments

With values, the equation on the previous page becomes:

DSBSC = 4Vp-p 2kHz sine × 4Vp-p 100kHz sine.

13. Adjust the scope's *Timebase* control to view two or so cycles of the Master Signals module's *2kHz SINE* output.

14. Activate the scope's Channel 1 input (by checking the Channel 1 *Enabled* box) to view the DSBSC signal out of the Multiplier module as well as the message signal.

15. Set the scope's Channel 0 *Scale* control to the *500mV/div* position and the Channel 1 *Scale* control to the *1V/div* position (if it's not already).

16. Draw the two waveforms to scale in the space provided below.

    Tip: Draw the message signal in the upper half of the graph and the DSBSC signal in the lower half.

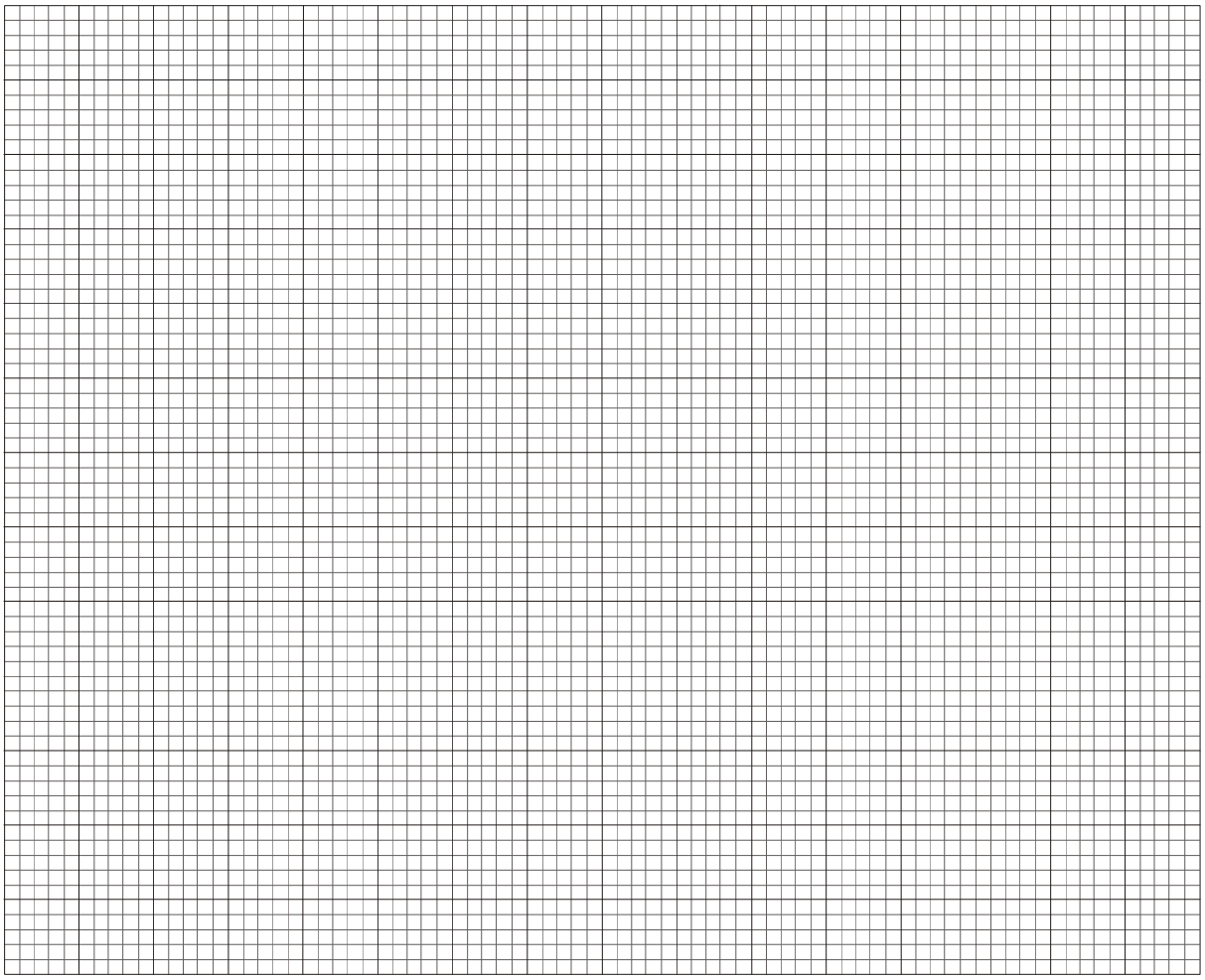

 © 2008 Emona Instruments



Ask the instructor to check your work before continuing.

17. If they're not already, overlay the message with the DSBSC signal's envelopes to compare them using the scope's Channel 0 *Position* control.

Question 1
What feature of the Multiplier module's output suggests that it's a DSBSC signal? **Tip:** If you're not sure about the answer to the questions, see the preliminary discussion.

Question 2
The DSBSC signal is a complex waveform consisting of more than one signal. Is one of the signals a 2kHz sinewave? Explain your answer.

Question 3
For the given inputs to the Multiplier module, how many sinewaves does the DSBSC signal consist of, and what are their frequencies?

Question 4
Why does this make DSBSC signals better for transmission than AM signals?



Ask the instructor to check your work before continuing.

Part B - Generating a DSBSC signal using speech

This experiment has generated a DSBSC signal using a sinewave for the message. However, the message in commercial communications systems is much more likely to be speech and music. The next part of the experiment lets you see what a DSBSC signal looks like when modulated by speech.

18. Disconnect the plugs to the Master Signals module's *2kHz SINE* output.

19. Connect them to the Speech module's output as shown in Figure 6 below.

    Remember: Dotted lines show leads already in place.

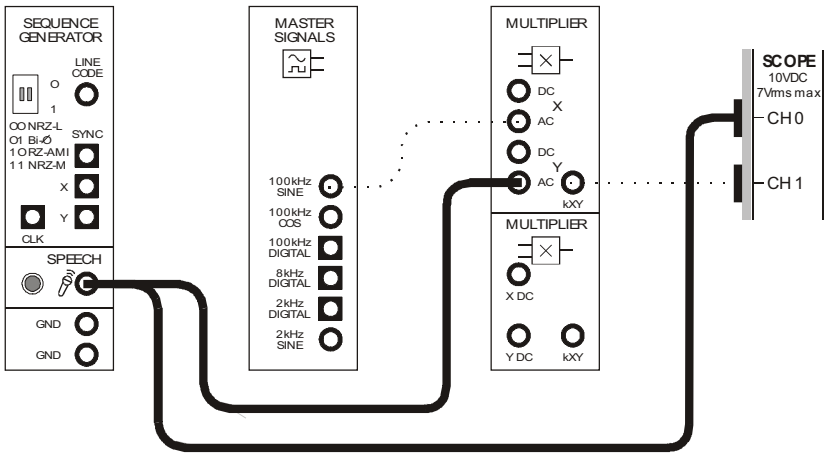

Figure 6

20. Set the scope's *Timebase* control to the *1ms/div* position.

21. Hum and talk into the microphone while watching the scope's display.

Question 5

Why isn't there any signal out of the Multiplier module when you're not humming or talking?

Ask the instructor to check your work before continuing.

Part C – Investigating depth of modulation

It's possible to modulate the carrier by different amounts. This part of the experiment let's you investigate this.

22. Return the scope's *Timebase* control to the *100µs/div* position.

23. Locate the Amplifier module on the DATEx SFP and set its soft *Gain* control to about a quarter of its travel (the control's line should be pointing to where the number nine is on a clock's face).

24. Modify the set-up as shown in Figure 7 below.

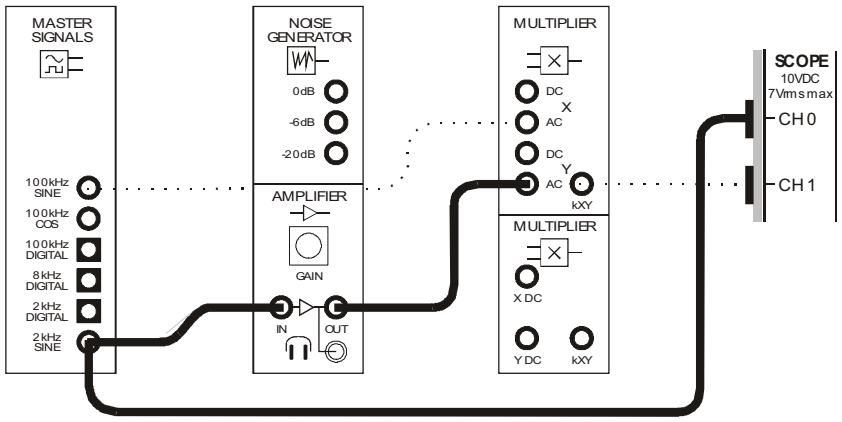

Figure 7

The set-up in Figure 7 can be represented by the block diagram in Figure 8 below. The Amplifier allows the message signal's amplitude to be adjustable.

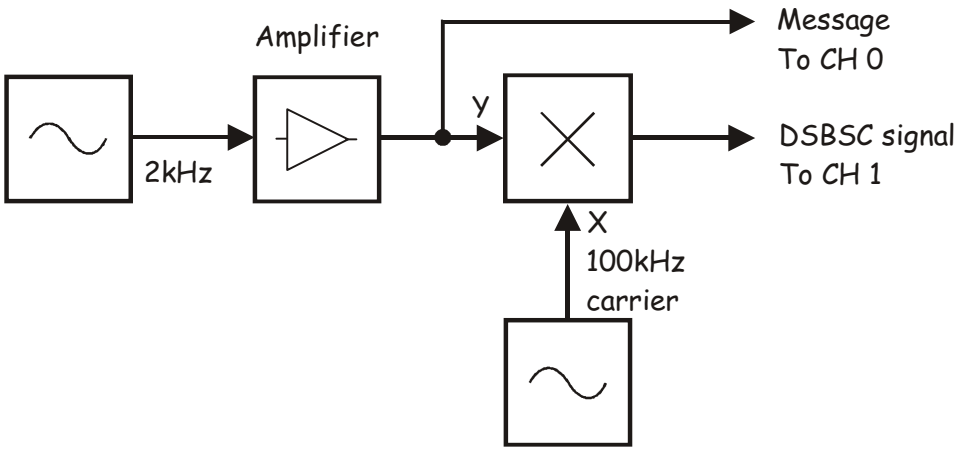

Figure 8

Note: At this stage, the Multiplier module's output should be the normal DSBSC signal that you sketched earlier.

Recall from Experiment 5 that an AM signal has two dimensions that can be measured and used to calculated modulation index (m). The dimensions are denoted *P* and *Q*. If you've forgotten which one is which, take a minute to read over the notes at the top of page 5-14 before going on to the next step.

25. Vary the message signal's amplitude a little by turning the Amplifier module's soft *Gain* control left and right a little. Notice the effect that this has on the DSBSC signal's *P* and *Q* dimensions.

Question 6
Based on your observations in Step 25, when the message's amplitude is varied

- ☐ neither dimensions *P* or *Q* are affected.
- ☐ only dimension *Q* is affected.
- ☐ only dimension *P* is affected.
- ☐ both dimensions *P* and *Q* are affected.

 © 2008 Emona Instruments

On the face of it, determining the depth of modulation of a DSBSC signal is a problem. The modulation index is always the same number regardless of the message signal's amplitude. This is because the DSBSC signals *Q* dimension is always zero.

However, this isn't the problem that it seems. One of the main reasons for calculating an AM signal's modulation index is so that the distribution of power between the signal's carrier and its sidebands can be calculated. However, DSBSC signals don't have a carrier (remember, it's suppressed). This means that all of the DSBSC signal's power is distributed between its sidebands evenly. So there's no need to calculate a DSBSC signal's modulation index.

The fact that you can't calculate a DSBSC signal's modulation index might imply that you can make either the message or the carrier as large as you like without worrying about over-modulation. This isn't true. Making either of these two signals too large can still *overload* the modulator resulting in a type of distortion that you've seen before. The next part of the experiment lets you observe what happens when you overload a DSBSC modulator.

26. Set the Amplifier module's soft *Gain* control to about half its travel and notice the effect on the DSBSC signal.

    Note 1: Resize the display as necessary using the scope's Channel 1 S*cale* control.

    Note 2: If doing this has no effect, turn up the gain control a little more.

27. Draw the new DSBSC signal to scale in the space provided below.

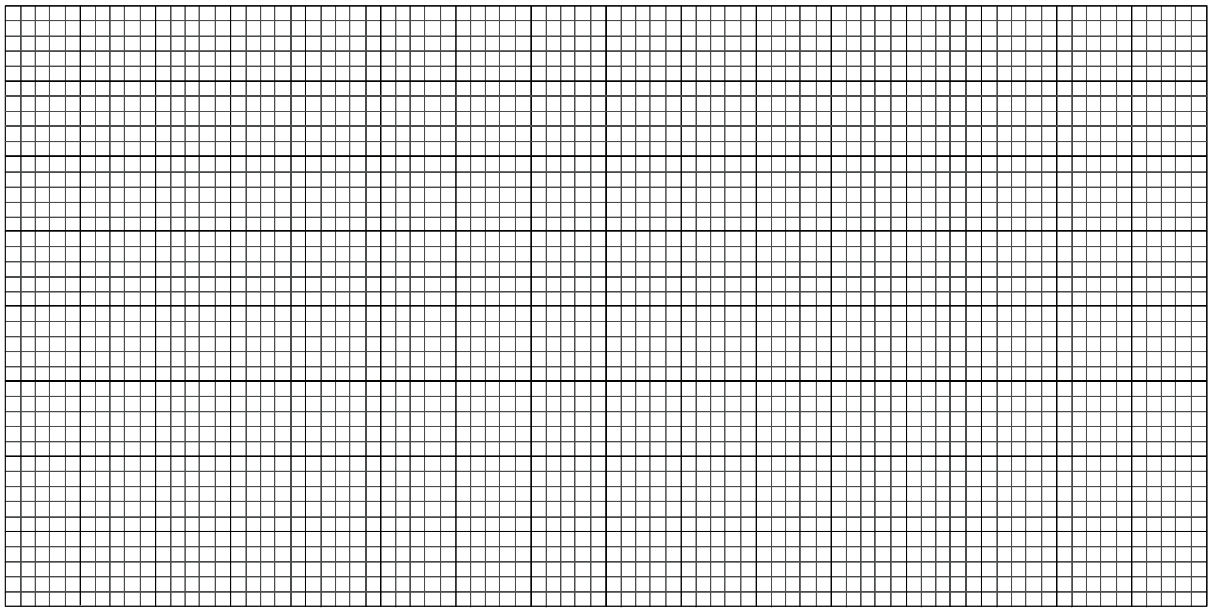

Question 7

What is the name of this type of distortion?



Ask the instructor to check your work before finishing.

© 2008 Emona Instruments

Name: _____

Class: _____

7 - Observations of AM and DSBSC signals in the frequency domain

Experiment 7 – Observations of AM and DSBSC signals in the frequency domain

Preliminary discussion

Experiments 5 and 6 use the Emona DATEx to demonstrate the differences you would see on a scope between the output signals of an AM and DSBSC modulator. To refresh your memory, Figure 1 below shows the AM and DSBSC signals that would be produced by identical inputs (for example, a 1kHz sinewave for the message and a 100kHz sinewave for the carrier).

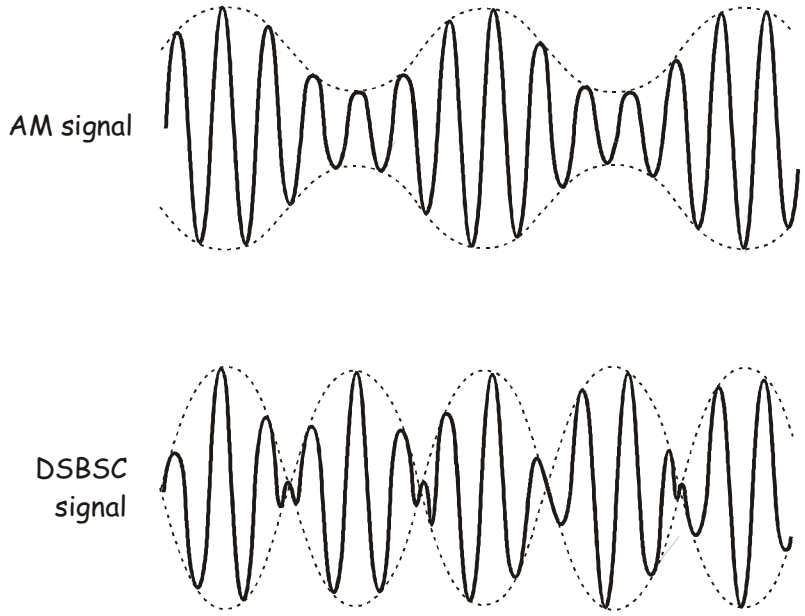

Figure 1

The two signals look different because they contain different sinewaves. That is, they have a different *spectral* composition. The reason for this is explained by the mathematical models of AM and DSBSC. Side-by-side, it's easy to see that the equations are a little different.

AM = (DC + message) × the carrier DSBSC = the message × the carrier

And, when the equations are solved for the inputs specified above, we find that the AM and DSBSC signals consist of the following:

AM	DSBSC	Description
100kHz	-	A sinewave at the carrier frequency
101kHz	101kHz	A sinewave with a frequency equal to the sum of the carrier and message frequencies (the upper sideband or USB)
99kHz	99kHz	A sinewave with a frequency equal to the difference between the carrier and message frequencies (the lower sideband or LSB)

As you can see, AM signals include the carrier signal whereas DSBSC signals don't.

When you think about it, a scope's display is actually a graph of time (on the X-axis) versus voltage (on the Y-axis). Importantly, graphs plotted this way are said to be drawn in the *time domain*.

Another way of representing signals like AM and DSBSC signals involves drawing all the sinewaves that they contain on a graph that has frequency for the X-axis instead of time. In other words, they're drawn in the *frequency domain*. When the AM and DSBSC signals in Figure 1 are drawn this way, we get the graphs in Figure 2 below.

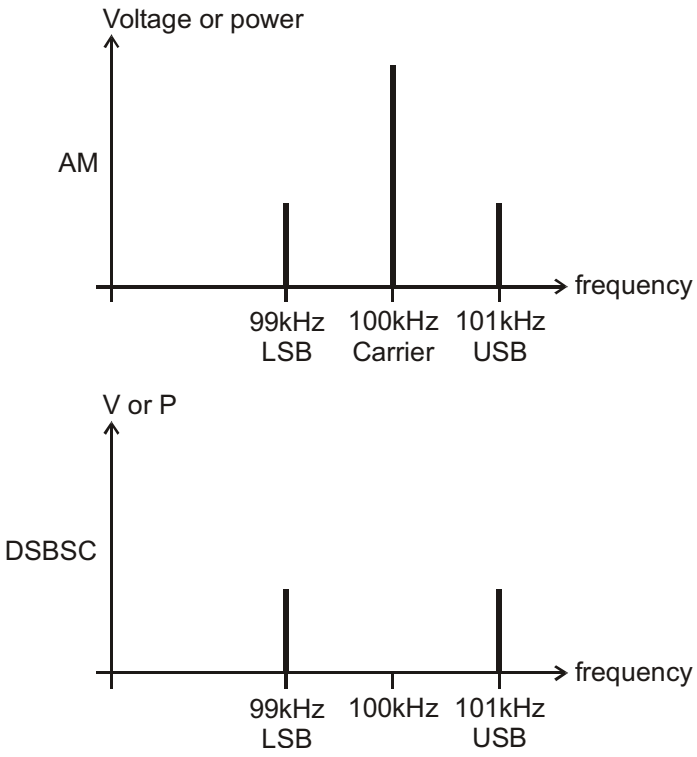

Figure 2

Frequency domain representations of complex signals are very useful for thinking about their spectral composition. They give you a tool for visualising the sinewaves that the signal is made up of. They also help you to see how much of the frequency spectrum the signal occupies. This is the signal's *bandwidth* and is a critical issue in communications and telecommunications.

The bandwidth of AM and DSBSC signals can be calculated in one of two ways. The frequency domain graphs in Figure 2 shows that the signals occupy a portion of the spectrum from the lower sideband up to the upper sideband. That being the case, the bandwidth can be found using the equation:

$$BW = USB - LSB$$

Using this equation we find that the bandwidth of the AM and DSBSC signals in Figure 2 are 2kHz. In situations where the sidebands are made up of more than one sinewave, you must solve the equation using the highest frequency in the USB and the lowest frequency in the LSB.

Now, compare the bandwidth of the signals in Figure 2 (2kHz) with the original signals used to produce them (that is, a 1kHz message and a 100kHz carrier). Notice that their bandwidths are twice the frequency of their message. This gives us the second equation for calculating bandwidth:

$$BW = 2 \times f_m \qquad \text{where } f_m \text{ = the message frequency}$$

In situations where the message is made up of more than one sinewave, you must solve the equation using the highest frequency in the message.

The experiment

For this experiment you'll use the Emona DATEx to generate a real AM and DSBSC signal then analyse the spectral elements of the two signals using the NI ELVIS Dynamic Signal Analyzer.

It should take you about 50 minutes to complete this experiment.

Equipment

- Personal computer with appropriate software installed
- NI ELVIS II plus USB cable and power pack
- Emona DATEx experimental add-in module
- Two BNC to 2mm banana-plug leads
- Assorted 2mm banana-plug patch leads

Procedure

Part A – Setting up the AM modulator

To experiment with AM spectrum analysis, you need an AM signal. The first part of the experiment gets you to set one up.

1. Ensure that the NI ELVIS II power switch at the back of the unit is off.

2. Carefully plug the Emona DATEx experimental add-in module into the NI ELVIS II.

3. Set the *Control Mode* switch on the DATEx module (top right corner) to *PC Control*.

4. Connect the NI ELVIS II to the PC using the USB cable.

   Note: This may already have been done for you.

5. Turn on the NI ELVIS II power switch at the rear of the unit then turn on its *Prototyping Board Power* switch at the top right corner near the power indicator.

6. Turn on the PC and let it boot-up.

7. Launch the NI ELVISmx software.

8. Launch the NI ELVIS II Variable Power Supplies VI and click on its *Run* control to activate the hardware.

9. Adjust the Variable Power Supplies negative output *Voltage* control for an output of about -6V (the exact value is not critical).

10. Launch the NI ELVIS II DMM VI and click on its *Run* control to activate the hardware.

11. Set up the DMM VI for measuring DC voltages.

12. Launch the DATEx soft front-panel (SFP).

13. Check you have soft control over the DATEx by activating the PCM Encoder module's **soft** *PDM/TDM* control on the DATEx SFP.

    Note: If you're set-up is working correctly, the PCM Decoder module's LED on the DATEx board should turn on and off.

14. Locate the Adder module on the DATEx SFP and turn its soft *G* and *g* controls fully anti-clockwise.

15. Connect the set-up shown in Figure 3 below.

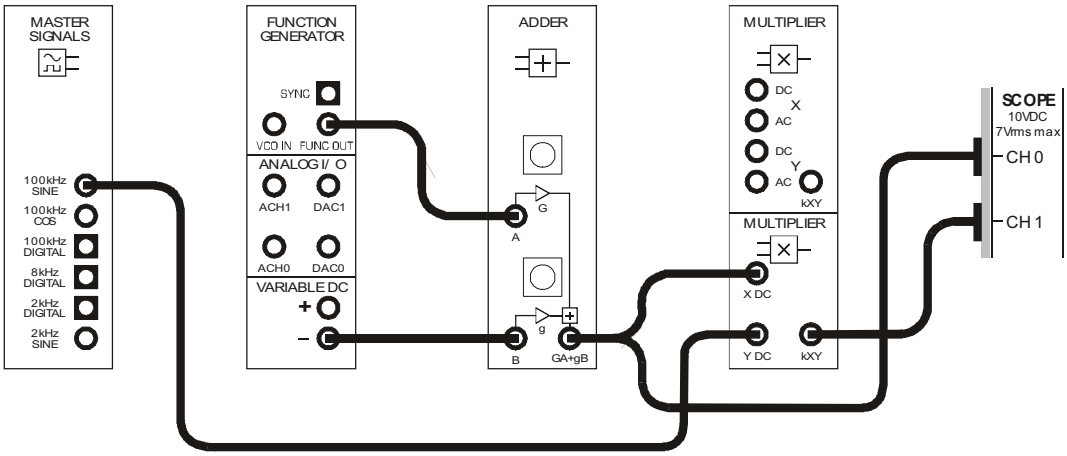

Figure 3

16. Connect the Adder module's output to the DMM and adjust the module's soft *g* control to obtain a 1V DC output.

    Note 1: You must also connect the DMM's *COM* input to a ground terminal on the Emona DATEx.

    Note 2: Remember also that you can use the keyboards tab and arrow keys for fine adjustment of DATEx soft controls.

17. Disconnect the DMM and close its VI.

18. Launch the NI ELVIS II Function Generator VI and click on its *Run* control to activate the hardware.

19. Adjust the function generator using its soft controls for an output with the following specifications:

    - Waveshape: Sine
    - Frequency: 10kHz exactly
    - Amplitude: 4Vpp
    - DC Offset: 0V

20. You'll be using the function generator VI again later but minimise its window for now.

21. Launch the NI ELVIS II Oscilloscope VI and click on its *Run* control to activate the hardware.

22. Set up the scope per the procedure in Experiment 1 (page 1-12) with the following changes:

    - Channel 0 *Coupling* control to the *DC* position instead of *AC*
    - Channel 0 *Scale* control to the *500mV/div* position instead of *1V/div*
    - *Timebase* control to the *50µs/div* position instead of *500µs/div*
    - *Trigger Level* control to the *1V* position instead of *0V*

23. Adjust the Adder module's soft *G* control to obtain a 1Vp-p sinewave.

24. Activate the scope's Channel 1 input (by checking the Channel 1 *Enabled* box) to view both the message and the modulated carrier.

    Self check: If the scope's *Scale* control for Channel 1 is set to the *1V/div* position, the scope should now display an AM signal with envelopes that are the same shape and size as the message. If not, close all windows, check your wiring then repeat the process starting from Step 7.

The set-up can be represented by the block diagram in Figure 4 below. It implements the equation: AM = (1VDC + 1Vp-p 10kHz sine) × 4Vp-p 100kHz sine.

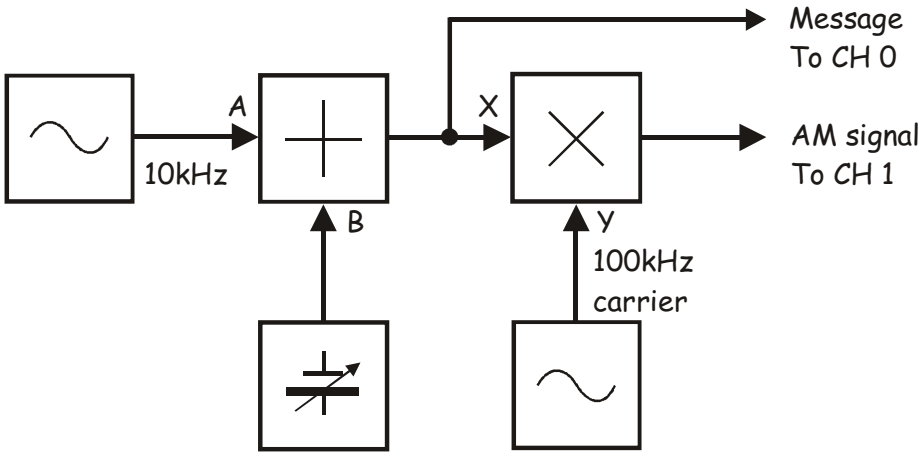

Figure 4

 © 2008 Emona Instruments

Question 1

For the given inputs to the Multiplier module, what are the frequencies of the three sinewaves on its output?

Question 2

Use this information to calculate the AM signal's bandwidth. **Tip:** If you're not sure how to do this, read the preliminary discussion.



Ask the instructor to check your work before continuing.

Part B – Setting up the NI ELVIS II Dynamic Signal Analyzer (DSA)

25. Suspend the scope's operation by clicking on its *Stop* control once.

    Note: The scope's display should freeze and its hardware has been deactivated. This is a necessary step as the scope and signal analyzer share hardware resources and so they cannot be operated simultaneously.

26. Minimise the scope's VI.

27. Launch the NI ELVIS II Dynamic Signal Analyzer VI.

    Note: If the Dynamic Signal Analyzer VI has launched successfully, the instrument's window will be visible (see Figure 5).

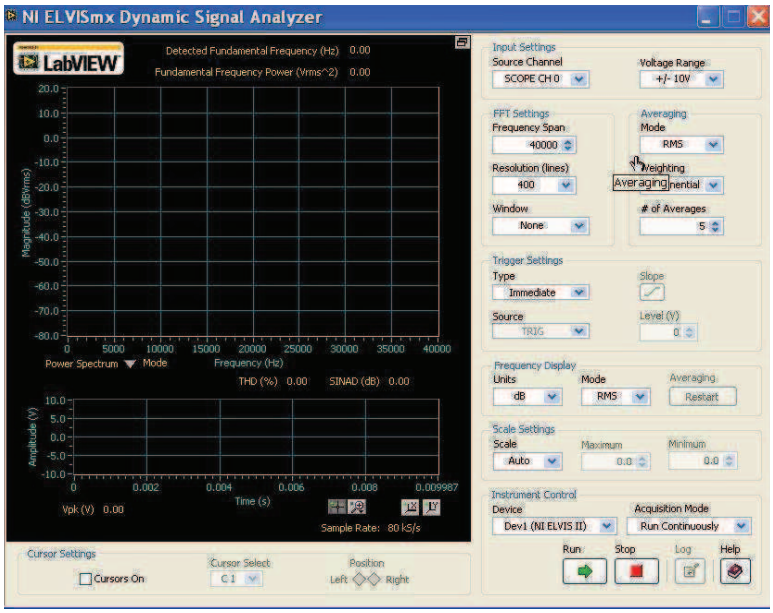

Figure 5

28. Adjust the signal analyzer's controls as follows:

Input Settings

- *Source Channel* to *SCOPE CH 1*
- Voltage Range to ±10V

FFT Settings

- *Frequency Span* to *150,000*
- *Resolution* to *400*
- *Window* to *7 Term B-Harris*

Averaging

- *Mode* to *RMS*
- *Weighting* to *Exponential*
- *# of Averages* to *3*

Trigger Settings

- *Type* to *Edge*

Frequency Display

- *Units* to *dB*
- *Mode* to *RMS*
- *Scale* to *Auto*

Cursor settings

- *Cursors On* box unchecked (for now)

29. Click on the signal analyzer's *Run* control to activate its hardware.

Note: If the Signal Analyzer VI has been set up correctly, its display should look like Figure 6 below.

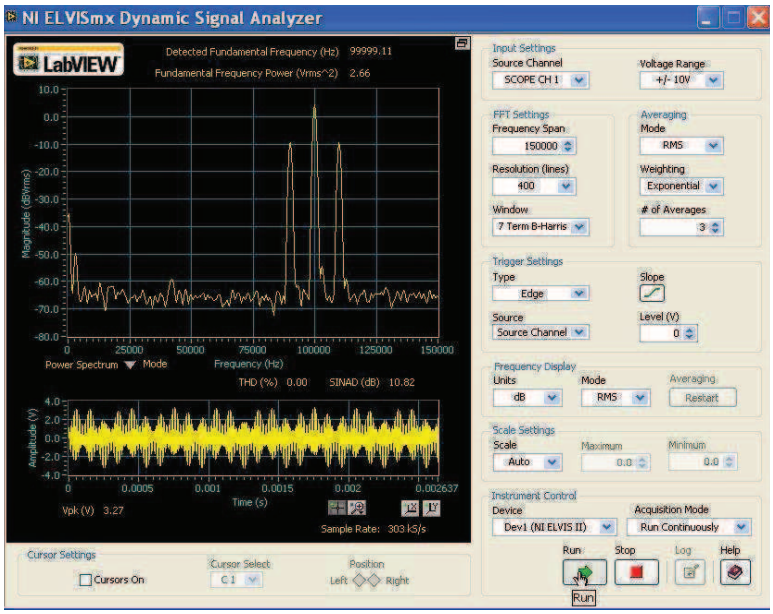

Figure 6

The Signal Analyzer's display needs a little explaining here. There are actually two displays, a large one on top and a much smaller one underneath. The smaller one is a time domain representation of the input (in other words, the display is a scope). Notice that it's showing the AM signal that you set up earlier and saw in Step 24.

The larger of the two displays is the frequency domain representation of the input. Notice that it looks fairly similar to the frequency domain graph for an AM signal in Figure 2 (in the preliminary discussion). The Signal Analyzer's display doesn't have single sharp lines for each of the sinewaves present in the signal because the practical implementation of FFT is not as precise as the theoretical expectation.

Part C – Spectrum analysis of an AM signal

The next part of this experiment let's you analyze the frequency domain representation of the AM signal to see if its frequency components match the values that you mathematically predicted for Questions 1 and 2.

30. Activate the signal analyzer's cursors by checking (that is, ticking) *Cursors On* box.

    Note: When you do, green horizontal and vertical lines should appear on the signal analyzer's frequency domain display.

The NI ELVIS II Dynamic Signal Analyzer has two cursors *C1* and *C2* that default to the left most side of the display when the signal analyzer's VI is launched. They're repositioned by "grabbing" their vertical lines with the mouse and moving the mouse left or right.

31. Use the mouse to grab and move the vertical line of cursor *C1*.

    Note: As you do, notice that cursor *C1* moves along the signal analyzer's trace and that the vertical and horizontal lines move so that they always intersect at *C1*.

32. Repeat Step 31 for cursor *C2*.

    Note: Fine control over the cursors' position is obtained by using the cursor's *Position* control in the *Cursor Settings area (below the display*).

The NI ELVIS II Dynamic Signal Analyzer includes a tool that measures the ***difference*** in magnitude and frequency between the two cursors. This information is displayed in green between the upper and lower parts of the display.

33. Move the cursors while watching the measurement readout to observe the effect.

34. Position the cursors so that they're on top of each other and note the measurement.

    Note: When you do, the measurement of difference in magnitude and frequency should both be zero.

Usefully, when one of the cursors is moved to the extreme left of the display, its position on the X-axis is zero. This means that the cursor is sitting on 0Hz. It also means that the measurement readout gives an absolute value of frequency for the other cursor. This makes sense when you think about it because the readout gives the difference in frequency between the two cursors but one of them is zero.

35. Move *C1* to the extreme left of the display.

36. Align *C2* with the highest point in the AM signal's lower sideband.

    Note: This is the sinewave just to the left of the largest sinewave in the display.

37. Measure the sinewave's frequency and record this in Table 1 on the next page.

38. Align *C2* with the highest point in the AM signal's carrier and repeat Step 37.

    Note: This is the largest sinewave in the display.

39. Align *C2* with the highest point in the AM signal's upper sideband and repeat Step 37.

    Note: This is the sinewave just to the right of the carrier.

40. Align *C1* with the highest point in the AM signal's lower sideband and measure the AM signal's bandwidth.

Table 1

LSB frequency	
Carrier frequency	
USB frequency	
Bandwidth	

Question 3
How do the measured values in Table 1 compare with your theoretically predicted values (see Questions 1 and 2)? Explain any differences.



Ask the instructor to check your work before continuing.

As an aside, at this point it looks as though the sidebands are nearly as large as the carrier. However, this is misleading because the vertical axis is logarithmic (that is, it's non-linear). The sidebands are actually much smaller than the carrier. This can be proven as follows:

41. Set the Signal Analyzer's *Units* control to *Linear* instead of *dB*.

    Note: This sets the vertical axis to a simple linear voltage measurement instead of decibels.

42. Note the relative sizes of the sinewaves in the signal.

43. Return the Signal Analyzer's *Units* control to *dB*.

 © 2008 Emona Instruments

44. Maximise the function generator's VI and increase its output frequency to 20kHz.

45. Use the signal analyzer's cursors to find the AM signal's new bandwidth. Record this in Table 2 below.

    Note: It'll take up to thirty seconds for the display to be fully up to date with the change because it's an average of three sweeps.

46. Increase the function generator's output frequency to 30kHz.

47. Find and record the AM signal's new bandwidth.

Table 2

Bandwidth for fm = 20kHz	
Bandwidth for fm = 30kHz	

Question 4

What's the relationship between the message signal's frequency and the AM signal's bandwidth?



Ask the instructor to check your work before continuing.

48. Return the function generator's output frequency to 10kHz.

49. Wait until the signal analyzer's frequency domain display has fully updated then disconnect the banana plug to the Multiplier module's *X* input.

50. Wait until the display has fully updated then investigate the frequency of the most significant sinewave on the Multiplier module's output.

Question 5
What is this signal?

Question 6
What's missing and why?

51. Reconnect the banana plug to the Multiplier module's *X* input.

52. Disconnect the banana plug to the Multiplier module's *Y* input.

53. Wait until the display has fully updated then investigate the frequency of the most significant sinewave on the Multiplier module's output.

Question 7
What is this signal?

Question 8
Why are the sidebands missing when there's a message?



Ask the instructor to check your work before continuing.

Part D – Setting up the DSBSC modulator

To experiment with DSBSC spectrum analysis, you need a DSBSC signal. This part of the experiment gets you to set one up.

54. Suspend the signal analyzer's operation by clicking on its *Stop* control once.

55. Maximise the function generator's VI and check that its output frequency has been returned to 10kHz.

56. Set the function generator's output to 1Vpp.

57. Disassemble the current set-up.

58. Connect the set-up shown in Figure 7 below.

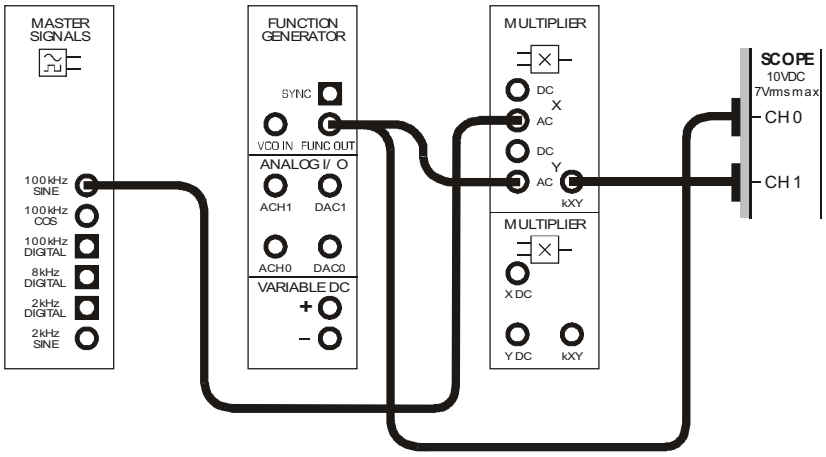

Figure 7

This set-up can be represented by the block diagram in Figure 8 on the next page. It implements the equation: DSBSC = 1Vp-p 10kHz sine × 4Vp-p 100kHz sine.

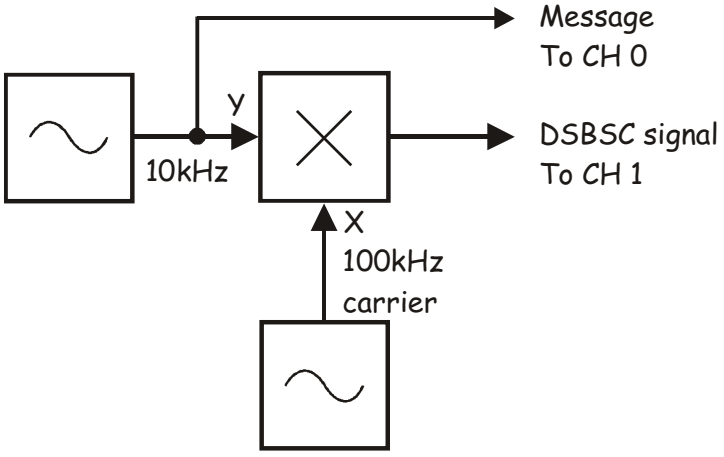

Figure 8

59. Restart the scope and make the following checks and adjustments:

- Check that the *Timebase* control is set to *50µs/div*
- Return the *Trigger Level* control to *0V*

Self check: The scope should now display a DSBSC signal with alternating halves of the envelope forming the same shape as the message and is about the same size.

Question 9
For the given inputs to the Multiplier module, what are the frequencies of the two sinewaves on its output?

Question 10
Use this information to calculate the DSBSC signal's bandwidth.

Ask the instructor to check your work before continuing.

 © 2008 Emona Instruments

Part E – Spectrum analysis of a DSBSC signal

60. Close the scope's VI.

61. Restart the NI ELVIS II Dynamic Signal Analyzer VI.

    Note: Once the display has had time to update, you should be able to clearly see the DSBSC signal's two sidebands.

You'll also see that the signal has a carrier. However, despite appearances, this signal is very small relative to the sidebands (remember, the scale for the Y-axis is decibels which is a logarithmic unit of measurement). Design limitations in implementing DSBSC mean that there will always be a small carrier component in the DSBSC signal. That's why the second "s" in DSBSC is for "suppressed".

62. Move *C1* to the extreme left of the display.

63. Align *C2* with the DSBSC signal's lower sideband.

64. Measure the sinewave's frequency and record this in Table 3 below.

65. Align *C2* with the DSBSC signal's upper sideband and repeat Step 64.

66. Use the signal analyzer's two cursors to determine and record the DSBSC signal's bandwidth.

Table 3

LSB frequency	
USB frequency	
Bandwidth	

Question 11
How do the measured values in Table 3 compare with your theoretically predicted values (see Questions 9 and 10)?

Question 12
Compare the DSBSC signal's bandwidth with the bandwidth for the AM signal with a 10kHz message (in Table 1). What can you say about the bandwidth requirements of AM and DSBSC signals?



Ask the instructor to check your work before continuing.

67. Find the DSBSC signal's bandwidth for two other message frequencies (say 20kHz and 30kHz).

Question 13
What's the relationship between the message signal's frequency and the DSBSC signal's bandwidth?



Ask the instructor to check your work before finishing.

Name: _____

Class: _____

8 - AM demodulation

Experiment 8 – AM demodulation

Preliminary discussion

If you've completed Experiment 5 then you've seen what happens when a 2kHz sinewave is used to amplitude modulate a carrier to produce an AM signal. Importantly, you would have seen a key characteristic of an AM signal – its envelopes are the same shape as the message (though the lower envelope is inverted).

Recovering the original message from a modulated carrier is called *demodulation* and this is the main purpose of communications and telecommunications receivers. The circuit that is widely used to demodulate AM signals is called an *envelope detector*. The block diagram of an envelope detector is shown in Figure 1 below.

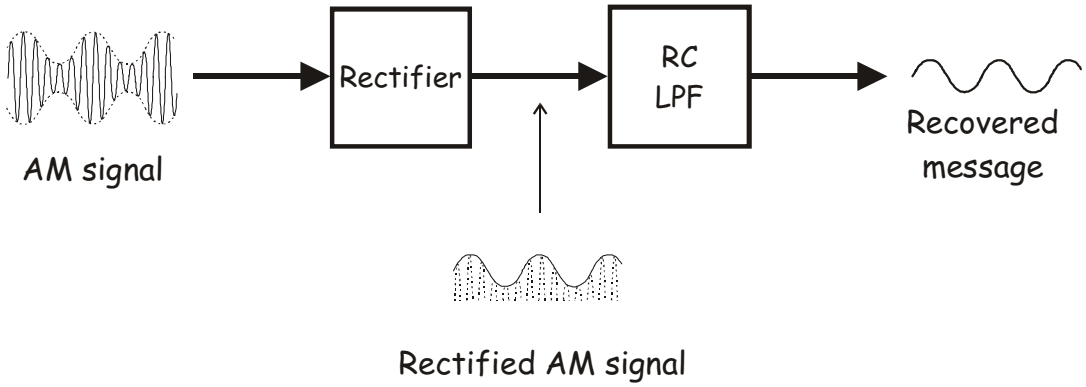

Figure 1

As you can see, the rectifier stage chops the AM signal in half letting only one of its envelopes through (the upper envelope in this case but the lower envelope is just as good). This signal is fed to an RC LPF which tracks the peaks of its input. When the input to the RC LPF is a rectified AM signal, it tracks the signal's envelope. Importantly, as the envelope is the same shape as the message, the RC LPF's output voltage is also the same shape as the message and so the AM signal is demodulated.

A limitation of envelope detector shown in Figure 1 is that it cannot accurately recover the message from over-modulated AM signals. To explain, recall that when an AM carrier is over-modulated the signal's envelope is no-longer the same shape as the original message. Instead, the envelope is distorted and so, by definition, this means that the envelope detector must produce a distorted version of the message.

The experiment

For this experiment you'll use the Emona DATEx to generate an AM signal by implementing its mathematical model. Then you'll set-up an envelope detector using the *Rectifier* and *RC LPF* on the trainer's Utilities module.

Once done, you'll connect the AM signal to the envelope detector's input and compare the demodulated output to the original message and the AM signal's envelope. You'll also observe the effect that an over-modulated AM signal has on the envelope detector's output.

Finally, if time permits, you'll demodulate the AM signal by implementing by multiplying it with a local carrier instead of using an envelope detector.

It should take you about 50 minutes to complete Parts A to D of this experiment and another 20 minutes to complete Part E.

Equipment

- Personal computer with appropriate software installed
- NI ELVIS II plus USB cable and power pack
- Emona DATEx experimental add-in module
- Two BNC to 2mm banana-plug leads
- Assorted 2mm banana-plug patch leads
- One set of headphones (stereo)

 © 2008 Emona Instruments

Procedure

Part A – Setting up the AM modulator

To experiment with AM demodulation you'll need an AM signal. The first part of the experiment gets you to set one up.

1. Ensure that the NI ELVIS II power switch at the back of the unit is off.

2. Carefully plug the Emona DATEx experimental add-in module into the NI ELVIS II.

3. Set the *Control Mode* switch on the DATEx module (top right corner) to *PC Control*.

4. Connect the NI ELVIS II to the PC using the USB cable.

   Note: This may already have been done for you.

5. Turn on the NI ELVIS II power switch at the rear of the unit then turn on its *Prototyping Board Power* switch at the top right corner near the power indicator.

6. Turn on the PC and let it boot-up.

7. Launch the NI ELVISmx software.

8. Launch and run the NI ELVIS II Variable Power Supplies VI.

9. Adjust the Variable Power Supplies negative output *Voltage* control for an output of about -6V (the exact value is not critical).

10. Launch and run the NI ELVIS II DMM VI.

11. Set up the DMM VI for measuring DC voltages.

12. Launch the DATEx soft front-panel (SFP) and check that you have soft control over the DATEx board.

13. Locate the Adder module on the DATEx SFP and turn its soft *G* and *g* controls fully anti-clockwise.

14. Connect the set-up shown in Figure 2 below.

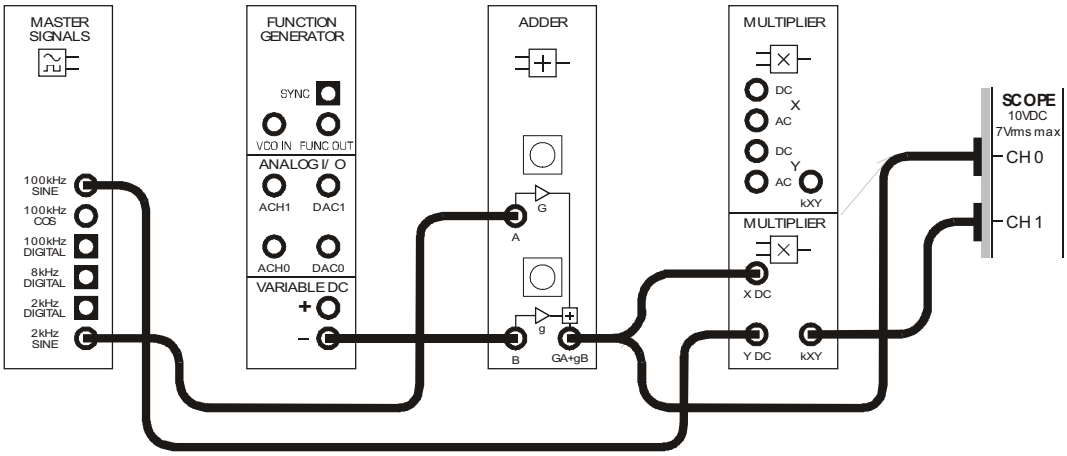

Figure 2

15. Connect the Adder module's output to the DMM and adjust the module's soft *g* control to obtain a 1V DC output.

    Note 1: Remember that you must also connect the DMM's *COM* input to a ground terminal on the Emona DATEx.

    Note 2: Remember also that you can use the keyboards tab and arrow keys for fine adjustment of DATEx soft controls.

16. Disconnect the DMM and close its VI.

17. Launch and run the NI ELVIS II Oscilloscope VI.

18. Set up the scope per the procedure in Experiment 1 with the following changes:

    - Channel 0 *Coupling* control to the *DC* position instead of *AC*
    - Channel 0 *Scale* control to the *500mV/div* position instead of *1V/div*
    - *Trigger Level* control to the *1V* position instead of *0V*

19. Adjust the scope's *Timebase* control to view only two or so cycles of the message signal.

20. Adjust the Adder module's soft *G* control to obtain a 1Vp-p sinewave.

 © 2008 Emona Instruments

21. Activate the scope's Channel 1 input to view both the message and the modulated carrier.

    Self check: If the scope's *Scale* control for Channel 1 is set to the *1V/div* position, the scope should now display an AM signal with envelopes that are the same shape and size as the message. If not, close all windows, check your wiring then repeat the process starting from Step 7.

The set-up in Figure 2 on the previous page can be represented by the block diagram in Figure 3 below. It generates a 100kHz carrier that is amplitude modulated by a 2kHz sinewave message.

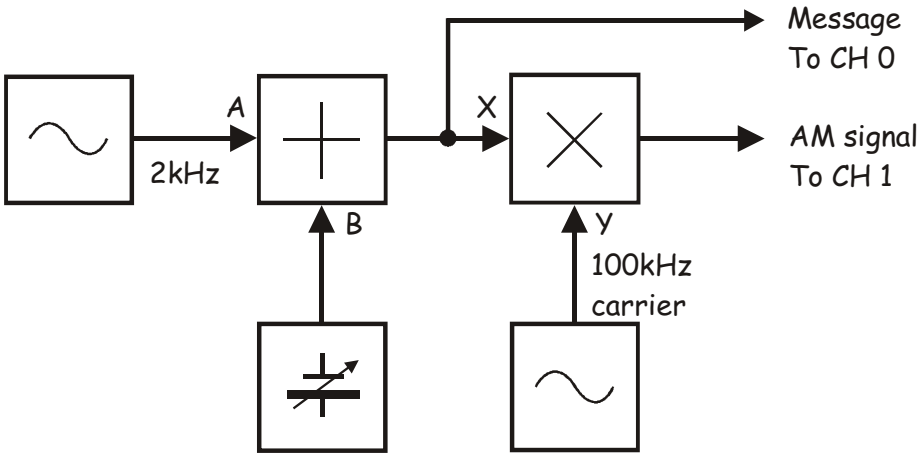

Figure 3



Ask the instructor to check your work before continuing.

Part B – Recovering the message using an envelope detector

22. Modify the set-up as shown in Figure 4 below.

Remember: Dotted lines show leads already in place.

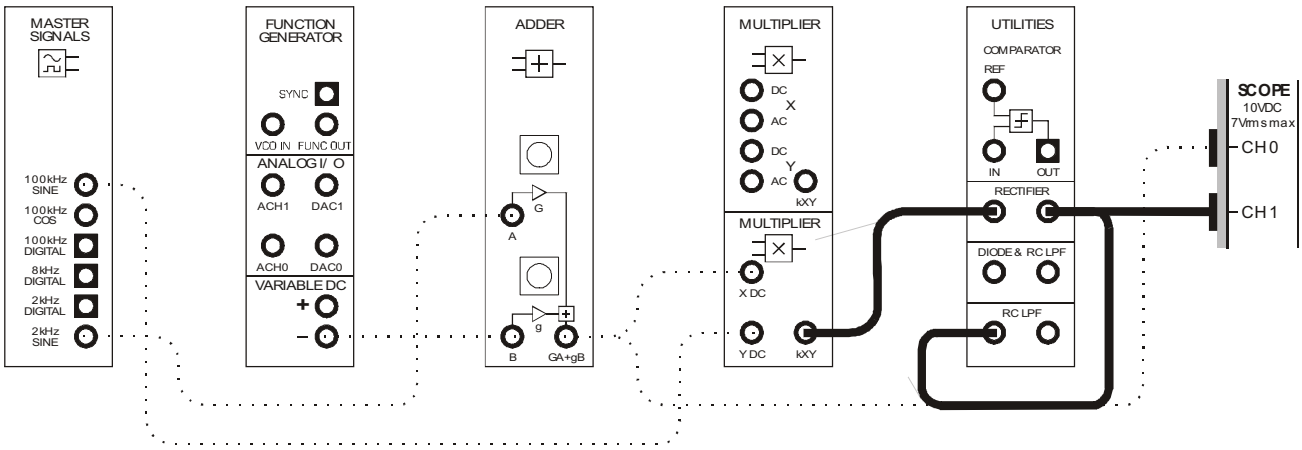

Figure 4

The additions to the set-up can be represented by the block diagram in Figure 5 below. As you can see, it's the envelope detector explained in the preliminary discussion.

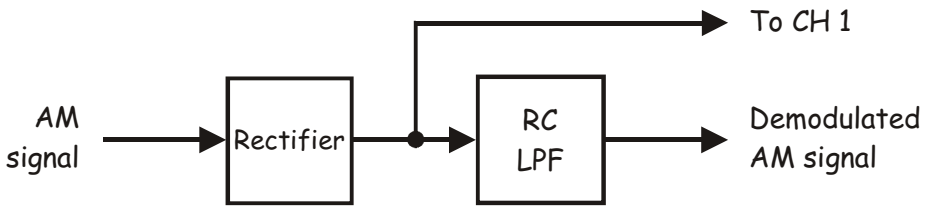

Figure 5

23. Adjust the scope's *Scale* and *Timebase* controls to appropriate settings for the signals.

24. Draw the two waveforms to scale in the space provided below leaving room to draw a third waveform.

    Tip: Draw the message signal in the upper third of the graph and the rectified AM signal in the middle third.

25. Disconnect the scope's *Channel 1* input from the *Rectifier's* output and connect it to the *RC LPF's* output instead.

26. Draw the demodulated AM signal to scale in the space that you left on the graph paper.

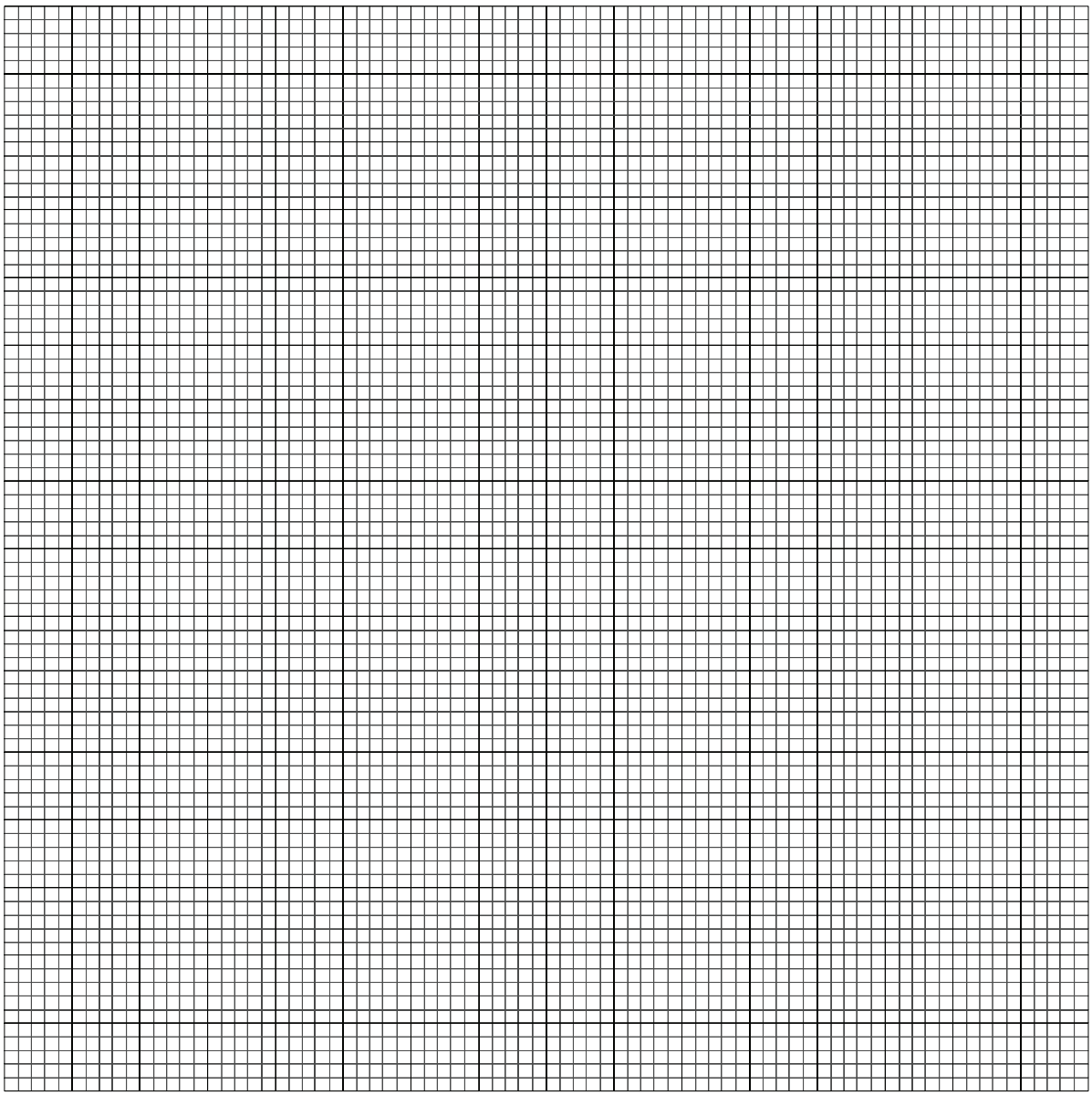

© 2008 Emona Instruments

Question 1
What is the relationship between the original message signal and the recovered message?



Ask the instructor to check your work before continuing.

Part C – Investigating the message's amplitude on the recovered message

27. Vary the message signal's amplitude up and down a little (by turning the Adder module's soft *G* control left and right a little) while watching the demodulated signal.

Question 2
What is the relationship between the amplitude of the two message signals?

28. Slowly increase the message signal's amplitude to maximum while watching the demodulated signal.

Question 3
What do you think causes the heavy distortion of the demodulated signal? **Tip:** If you're not sure, connect the scope's Channel 0 input to the AM modulator's output.

Question 4
Why does over-modulation cause the distortion?

 © 2008 Emona Instruments

Ask the instructor to check your work before continuing.

Part D – Transmitting and recovering speech using AM

This experiment has set up an AM communication system to "transmit" a message that is a 2kHz sinewave. The next part of the experiment lets you use the set-up to modulate, transmit, demodulate and listen to speech.

29. If you moved the scope's Channel 0 input to help you answer Question 4, reconnect it to the Adder module's output.

30. Return the message signal's amplitude to 1Vpp (by adjusting the Adder module's soft *G* control).

31. Modify the set-up as shown in Figure 6 below.

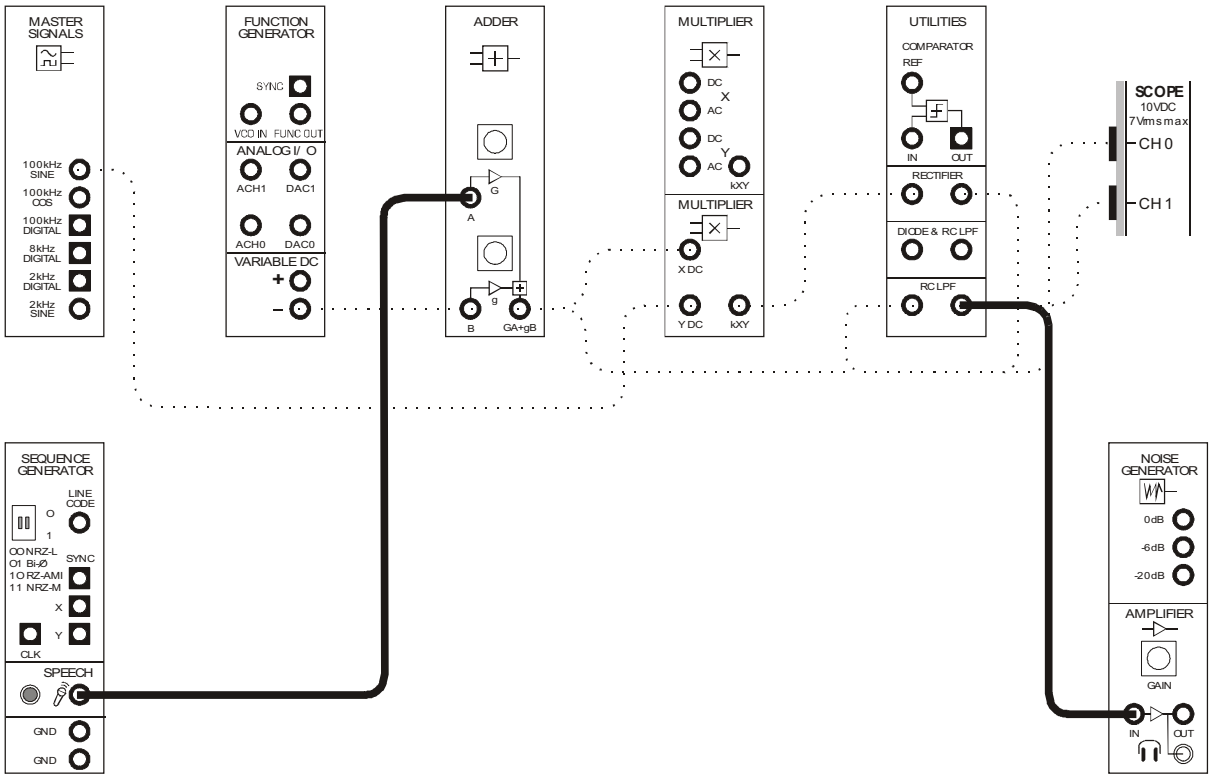

Figure 6

© 2008 Emona Instruments

32. Set the scope's *Timebase* control to the *2ms/div* position.

33. Turn the Amplifier module's soft *Gain* control fully anti-clockwise.

34. Without wearing the headphones, plug them into the Amplifier module's headphone socket.

35. Put the headphones on.

36. As you perform the next step, set the Amplifier module's soft *Gain* control to a comfortable sound level.

37. Hum and talk into the microphone while watching the scope's display and listening on the headphones.



Ask the instructor to check your work before continuing.

Part E – The mathematics of AM demodulation

AM demodulation can be understood mathematically because it is uses multiplication to reproduce the original message. To explain, recall that when two pure sinewaves are multiplied together (a mathematical process that necessarily involves some trigonometry that is not shown here) the result gives two completely new sinewaves:

- One with a frequency equal to the sum of the two signals' frequencies
- One with a frequency equal to the difference between the two signals' frequencies

The envelope detector works because the rectifier is a device that multiplies all signals on its one input with each other. Ordinarily, this is a nuisance but not for applications like AM demodulation. Recall that an AM signal consists of a carrier, the carrier plus the message and the carrier minus the message. So, when an AM signal is connected to a rectifier's input, mathematically the rectifier's cross multiplication of all of its sinewaves looks like:

$$\text{Rectifier's output} = \text{carrier} \times (\text{carrier} + \text{message}) \times (\text{carrier} - \text{message})$$

 © 2008 Emona Instruments

If the message signal used to generate the AM signal is a simple sinewave then, when the equation above is solved, the rectifier outputs six sinewaves at the following frequencies:

- Carrier + (carrier + message)
- Carrier + (carrier - message)
- (carrier + message) + (carrier - message)
- Carrier - (carrier + message) which simplifies to just the message
- Carrier - (carrier - message) which also simplifies to just the message
- (carrier + message) - (carrier - message)

To make this a little more meaningful, let's do an example with numbers. The AM modulator that you set up at the beginning of this experiment uses a 100kHz carrier and a 2kHz message (with a DC component). So, the resulting AM signal consists of three sinewaves: one at 100kHz, another at 102kHz and a third at 98kHz. Table 1 below shows what happens when these sinewaves are cross-multiplied by the rectifier.

Table 1	100kHz×102kHz	100kHz×98kHz	98kHz×102kHz
Sum	202kHz	198kHz	200kHz
Difference	2kHz	2kHz	4kHz

Notice that two of the sinewaves are at the message frequency. In other words, the message has been recovered! And, as the two messages are in phase, they simply add together to make a single bigger message.

Importantly, we don't want the other non-message sinewaves so, to reject them but keep the message, the rectifier's output is sent to a low-pass filter. Ideally, the filter's output will only consist of the message signal. The chances of this can be improved by making the carrier's frequency much higher than the highest frequency in the message. This in turn makes the frequency of the "summed" signals much higher and easier for the low-pass filter to reject.

[As an aside, the 4kHz sinewave that was generated would pass through the low-pass filter as well and be present on its output along with the 2kHz signal. This is inconvenient as it is a signal that was not present in the original message. Luckily, as the signal was generated by multiplying the sidebands, its amplitude is much lower than the recovered message and can be ignored.]

An almost identical mathematical process can be modelled using the Emona DATEx module's Multiplier module. However, instead of multiplying the AM signal's sinewaves with each other (the Multiplier module doesn't do this), they're multiplied with a locally generated 100kHz sinewave. The next part of this experiment lets you demodulate an AM signal this way.

38. Return the scope's *Timebase* control to its earlier setting (probably *200µs/div*).

39. Disconnect the envelope detector and modify the set-up to return it to just an AM modulator with a 2kHz sinewave for the message as shown in Figure 7 below.

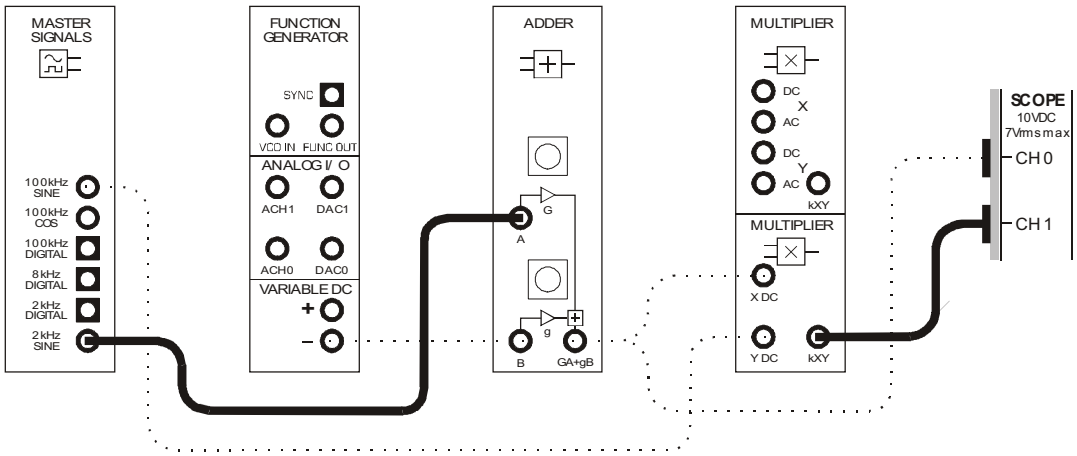

Figure 7

40. Modify the set-up as shown in Figure 8 below.

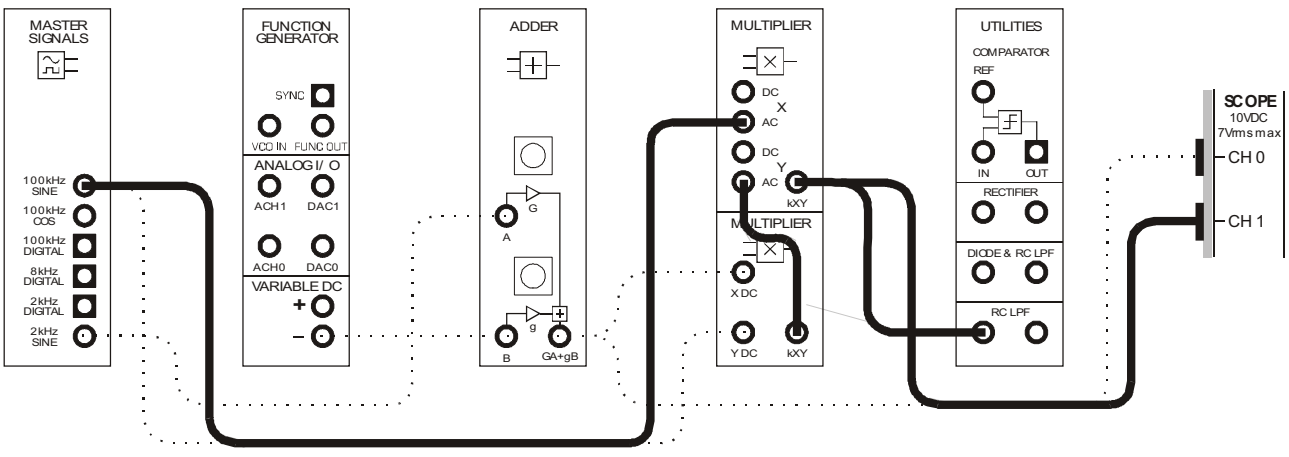

Figure 8

 © 2008 Emona Instruments

The additions to the set-up in Figure 8 on the previous page can be represented by the block diagram in Figure 9 below. The Multiplier module models the mathematical basis of AM demodulation and the *RC Low-pass filter* on the Utilities module picks out the message while rejecting the other sinewaves generated.

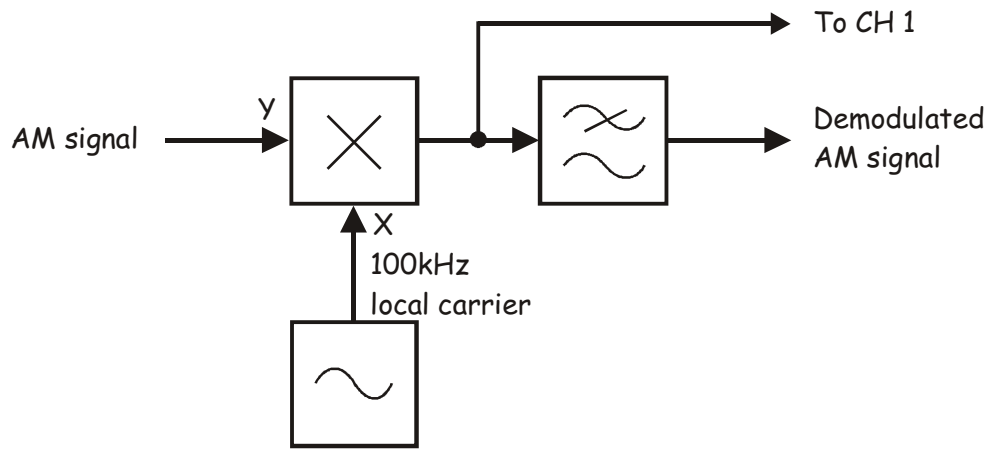

Figure 9

41. Compare the Multiplier module's output with the *Rectifier's* output that you drew earlier (see page 8-8).

Question 5
Given the AM signal (which consists of 100kHz, 102kHz and 98kHz sinewaves) is being multiplied by a 100kHz sinewave:

A) How many sinewaves are present in the Multiplier module's output?

B) What are their frequencies?

42. Disconnect the scope's *Channel 1* input from the Multiplier module's output and connect it to the *RC LPF's* output instead.

43. Compare the *RC LPF's* output with the message and the output *RC LPF's* that you drew earlier (see page 8-8).



Ask the instructor to check your work before continuing.

A common misconception about AM is that, once the signal is over-modulated, it's impossible to recover the message. However, when the AM signal is generated using an ideal or near-ideal modulator (like Figure 3) this is only true for the envelope detector.

The AM demodulation method being implemented in this part of the experiment (called *product detection* – though it is more accurate to call it *product demodulation*) doesn't suffer from this problem as it's not designed to recover the message by tracking one of the AM signal's envelopes. The final part of this experiment demonstrates this.

44. Connect the scope's Channel 0 to the AM modulator's output.

45. Set the scope's *Trigger Level* to *0V*.

    Note: The scope will lose triggering but the display will be adequate for the next steps.

46. Slowly increase the message signal's amplitude to produce a near 100% modulated AM signal by adjusting the Adder module's soft *G* control.

    Note: Resize the AM and demodulated message signals on the screen as necessary.

47. Slowly increase the message signal's amplitude to produce an AM signal that is modulated by more than 100% while paying close attention to the demodulated message signal.

As an aside, the commercial implementation of AM modulation commonly involves a Class C amplifier for efficiency (that is, to minimise power losses). When a Class C amplifier is operated at depths of modulation above 100% the circuit's operation no-longer corresponds with the model of an AM modulator in Figure 3. Importantly, in addition to producing an envelope that is not the same as the original message, the over-modulated Class C circuit produces extra frequency components in the spectrum. This means that neither the envelope detector nor the product demodulator can reproduce the message without distortion.

 © 2008 Emona Instruments



Ask the instructor to check your work before finishing.

© 2008 Emona Instruments

Name: _____

Class: _____

9 - DSBSC demodulation

Experiment 9 – DSBSC demodulation

Preliminary discussion

Experiment 8 shows how the envelope detector can be used to recover the original message from an AM signal (that is, demodulate it). Unfortunately, the envelope detector cannot be used to demodulate a DSBSC signal.

To understand why, recall that the envelope detector outputs a signal that is a copy of its input's envelope. This works well for demodulating AM because the signal's envelopes are the same shape as the message that produced it in the first place (that is, as long as it's not over-modulated). However, recall that a DSBSC signal's envelopes are not the same shape as the message.

Instead, DSBSC signals are demodulated using a circuit called a *product detector* (though *product demodulator* is a more appropriate name) and its basic block diagram is shown in Figure 1 below. Other names for this type of demodulation include a *synchronous detector* and *switching detector*.

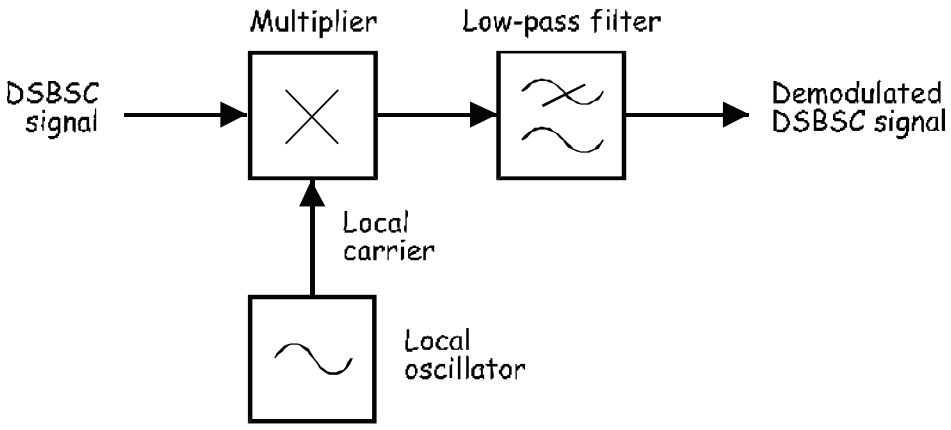

Figure 1

As its name implies, the product detector uses multiplication and so mathematics are necessary to explain its operation. The incoming DSBSC signal is multiplied by a pure sinewave that must be the same frequency as the DSBSC signal's suppressed carrier. This sinewave is generated by the receiver and is known as the *local carrier*.

To see why this process recovers the message, let's describe product detection mathematically:

DSBSC demodulator's output = the DSBSC signal × the local carrier

Importantly, recall that DSBSC generation involves the multiplication of the message with the carrier which produces sum and difference frequencies (the preliminary discussion in Experiment 6 summarises DSBSC generation). That being the case, this information can be substituted for the DSBSC signal and the equation rewritten as:

DSBSC demodulator's output = [(carrier + message) + (carrier – message)] × carrier

When the equation is solved, we get four sinewaves with the following frequencies:

- Carrier + (carrier + message)
- Carrier + (carrier - message)
- Carrier - (carrier + message) which simplifies to just the message
- Carrier - (carrier - message) which also simplifies to just the message

(If you're not sure why these sinewaves are produced, it's important to remember that whenever two pure sinewaves are multiplied together, two completely new sinewaves are generated. One has a frequency equal to the sum of the original sinewaves' frequencies and the other has a frequency equal to their difference.)

Importantly, notice that two of the products are sinewaves at the message frequency. In other words, the message has been recovered. As the two message signals are in phase, they simply add together to make one larger message.

Notice also that two of the products are non-message sinewaves. These sinewaves are unwanted and so a low-pass filter is used to reject them while keeping the message.

The experiment

For this experiment you'll use the Emona DATEx to generate a DSBSC signal by implementing its mathematical model. Then you'll set-up a product detector by implementing its mathematical model also.

Once done, you'll connect the DSBSC signal to the product detector's input and compare the demodulated output to the original message and the DSBSC signal's envelopes. You'll also observe the effect that a distorted DSBSC signal due to overloading has on the product detector's output.

Finally, if time permits, you'll investigate the effect on the product detector's performance of an unsynchronised local carrier.

It should take you about 1 hour to complete the whole experiment.

Equipment

- Personal computer with appropriate software installed
- NI ELVIS II plus USB cable and power pack
- Emona DATEx experimental add-in module
- Two BNC to 2mm banana-plug leads
- Assorted 2mm banana-plug patch leads
- One set of headphones (stereo)

Procedure

Part A – Setting up the DSBSC modulator

To experiment with DSBSC demodulation you need a DSBSC signal. The first part of the experiment gets you to set one up.

1. Ensure that the NI ELVIS II power switch at the back of the unit is off.

2. Carefully plug the Emona DATEx experimental add-in module into the NI ELVIS II.

3. Set the *Control Mode* switch on the DATEx module (top right corner) to *PC Control*.

4. Connect the NI ELVIS II to the PC using the USB cable.

   Note: This may already have been done for you.

5. Turn on the NI ELVIS II power switch at the rear of the unit then turn on its *Prototyping Board Power* switch at the top right corner near the power indicator.

6. Turn on the PC and let it boot-up.

7. Launch the NI ELVISmx software.

8. Launch and run the NI ELVIS II Oscilloscope VI.

9. Set up the scope per the procedure in Experiment 1 ensuring that the *Trigger Source* control is set to *CH 0*.

10. Connect the set-up shown in Figure 2 below.

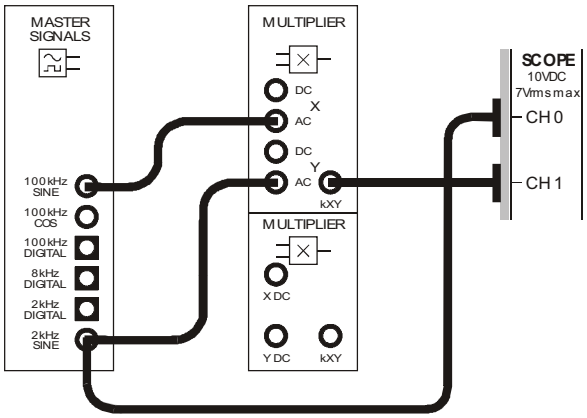

Figure 2

This set-up can be represented by the block diagram in Figure 3 below. It generates a 100kHz carrier that is DSBSC modulated by a 2kHz sinewave message.

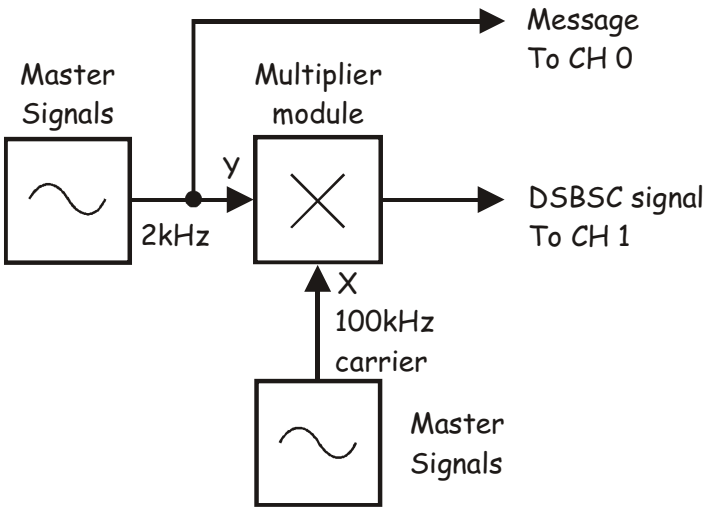

Figure 3

 © 2008 Emona Instruments

11. Adjust the scope's *Timebase* control to view two or so cycles of the Master Signals module's *2kHz SINE* output.

12. Activate the scope's Channel 1 input to view the DSBSC signal out of the Multiplier module as well as the message signal.

    Note: If the Multiplier module's output is not a DSBSC signal, check your wiring.

13. Set the scope's Channel 0 *Scale* control to the *1V/div* position and the Channel 1 *Scale* control to the *2V/div* position.

14. Draw the two waveforms to scale in the space provided on the next page leaving room to draw a third waveform.

    Tip: Draw the message signal in the upper third of the graph and the DSBSC signal in the middle third.

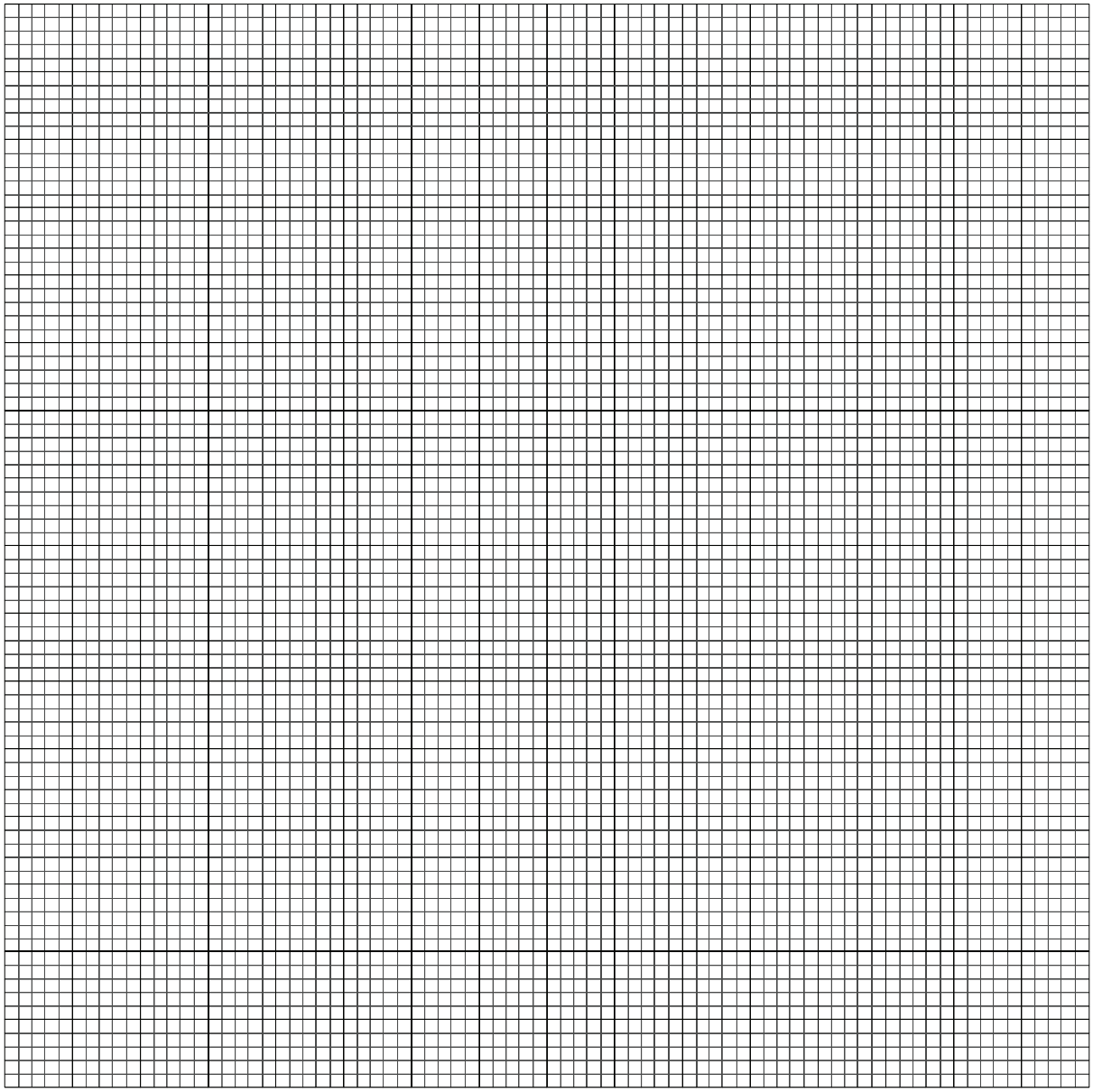



Ask the instructor to check your work before continuing.

© 2008 Emona Instruments

Part B – Recovering the message using a product detector

15. Launch the DATEx soft front-panel (SFP) and check that you have soft control over the DATEx board.

16. Locate the Tuneable Low-pass Filter module on the DATEx SFP and set its soft *Gain* control to about the middle of its travel.

17. Turn the Tuneable Low-pass Filter module's soft *Cut-off Frequency Adjust* control fully clockwise.

18. Modify the set-up as shown in Figure 4 below.

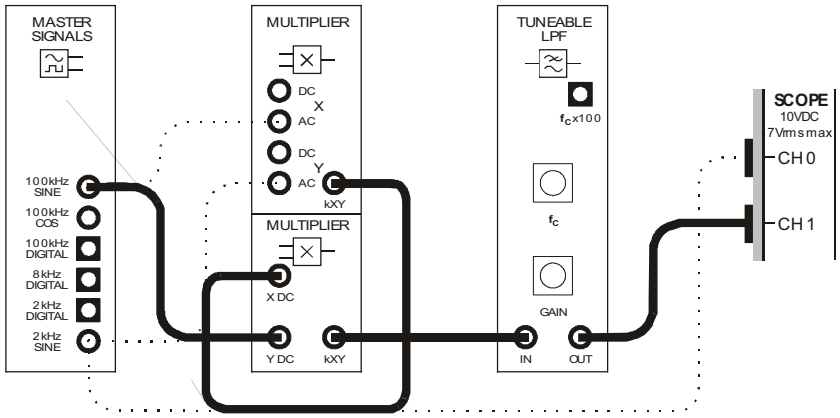

Figure 4

The additions to the set-up can be represented by the block diagram in Figure 5 on the next page. The Multiplier and Tuneable Low-pass Filter modules are used to implement a product detector which demodulates the original message from the DSBSC signal.

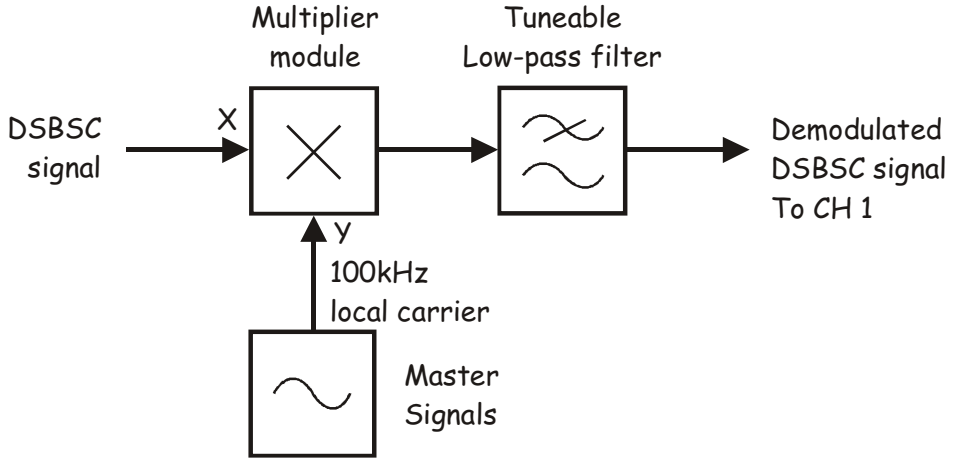

Figure 5

The entire set-up is represented by the block diagram in Figure 6 below. It highlights the fact that the modulator's carrier is "stolen" to provide the product detector's local carrier. This means that the two carriers are synchronised which is a necessary condition for DSBSC communications.

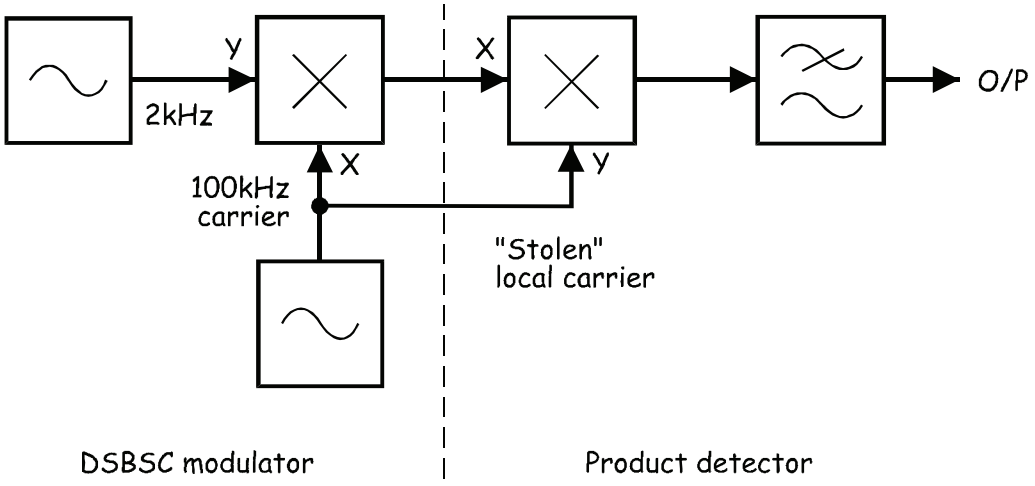

Figure 6

19. Draw the demodulated DSBSC signal to scale in the space that you left on the graph paper.

Question 1

Why must a product detector be used to recover the message instead of an envelope detector? **Tip:** If you're not sure, refer to the preliminary discussion.



Ask the instructor to check your work before continuing.

Part C – Investigating the message's amplitude on the recovered message

20. Locate the Amplifier module on the DATEx SFP and turn its soft *Gain* control to about a quarter of its travel.

21. Disconnect the plugs to the Master Signals module's *2kHz SINE* output.

22. Use the Amplifier module to modify the set-up as shown in Figure 7 below.

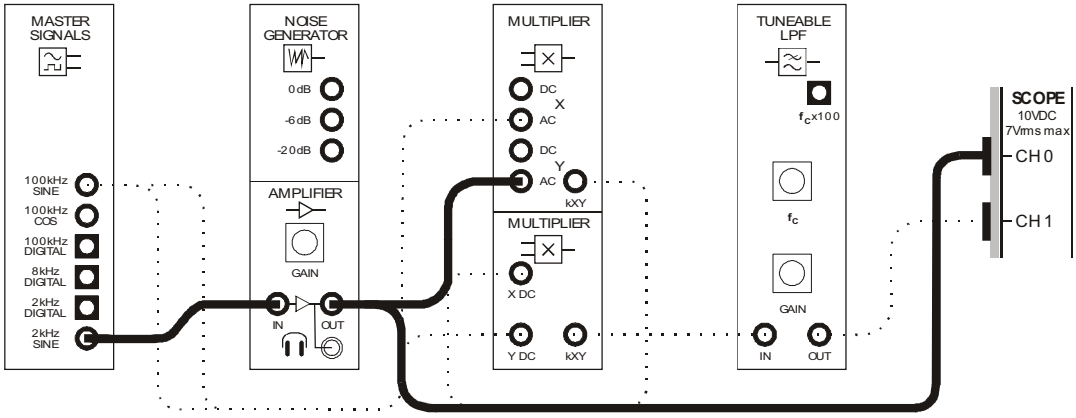

Figure 7

The addition to the set-up can be represented by the block diagram in Figure 8 below. The amplifier's variable gain allows the message's amplitude to be adjustable.

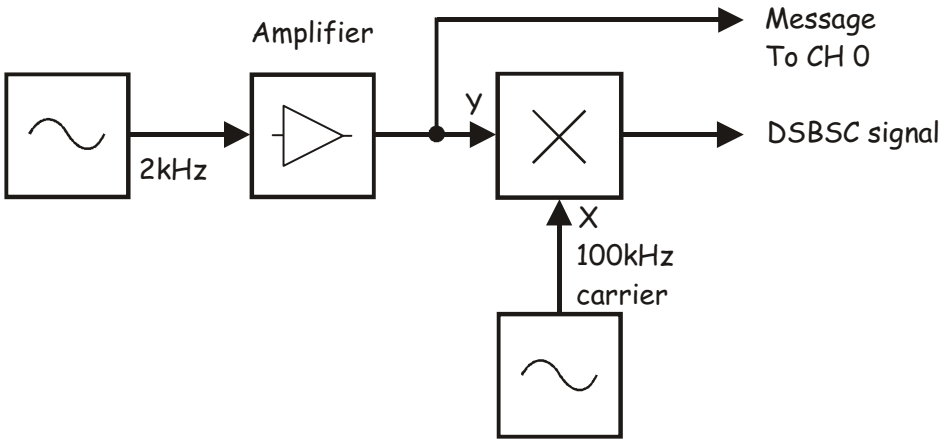

Figure 8

23. Vary the message signal's amplitude up and down a little (by turning the Amplifier module's soft *Gain* control left and right a little) while watching the demodulated signal.

Remember: You can use the keyboard's TAB and arrow keys for fine adjustments of DATEx controls.

Question 2
What is the relationship between the amplitude of the two message signals?

24. Slowly increase the message signal's amplitude to maximum until the demodulated signal begins to distort.

Question 3
What do you think causes the distortion of the demodulated signal? **Tip:** If you're not sure, connect the scope's Channel 0 input to the DSBSC modulator's output and set its *Trigger Source* control to the *CH 1* position.



Ask the instructor to check your work before continuing.

© 2008 Emona Instruments

Part D – Transmitting and recovering speech using DSBSC

This experiment has set up a DSBSC communication system to "transmit" a 2kHz sinewave. The next part of the experiment lets you use it to modulate, transmit, demodulate and listen to speech.

25. If you moved the scope's Channel 0 input and adjusted its *Trigger Source* control to help answer Question 3, return them to their previous positions.

26. Disconnect the leads to the Amplifier module and modify the set-up as shown in Figure 9 below.

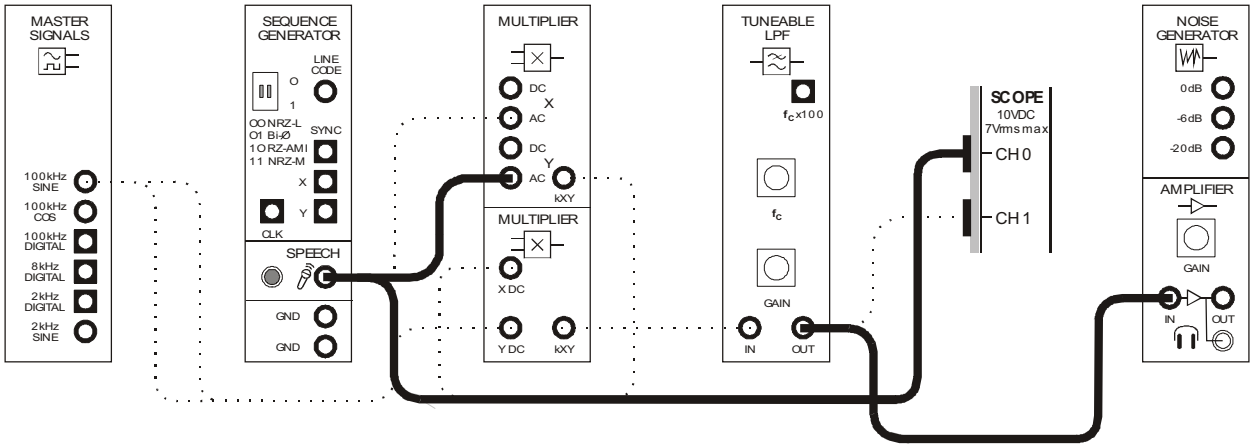

Figure 9

27. Set the scope's *Timebase* control to the *2ms/div* position.

28. Turn the Amplifier module's soft *Gain* control fully anti-clockwise.

29. Without wearing the headphones, plug them into the Amplifier module's headphone socket.

30. Put the headphones on.

31. As you perform the next step, set the Amplifier module's soft *Gain* control to a comfortable sound level.

32. Hum and talk into the microphone while watching the scope's display and listening on the headphones.

 © 2008 Emona Instruments



Ask the instructor to check your work before continuing.

Part E – Carrier synchronisation

Crucial to the correct operation of a DSBSC communications system is the synchronisation between the modulator's carrier signal and the product detector's local carrier. Any phase or frequency difference between the two signals adversely affects the system's performance.

The effect of phase errors

Recall that the product detector generates two copies of the message. Recall also that they're in phase with each other and so they simply add together to form one bigger message. However, if there's a phase error between the carriers, the product detector's two messages have a phase error also. One of them has the sum of the phase errors and the other the difference. In other words, the two messages are out of phase with each other.

If the carriers' phase error is small (say about 10°) the two messages still add together to form one bigger signal but not as big as when the carriers are in phase. As the carriers' phase error increases, the recovered message gets smaller. Once the phase error exceeds 45° the two messages begin to subtract from each other. When the carriers' phase error is 90° the two messages end up 180° out of phase and completely cancel each other out.

The next part of the experiment lets you observe the effects of carrier phase error.

33. Turn the Amplifier module's soft *Gain* control fully anti-clockwise again.

34. Return the scope's *Timebase* control to about the *100µs/div* position.

35. Locate the Phase Shifter module on the DATEx SFP and set its soft *Phase Change* control to the *180°* position.

36. Set the Phase Shifter module's soft *Phase Adjust* control to about the middle of its travel.

37. Disconnect the leads to the Speech output and modify the set-up as shown in Figure 10 below.

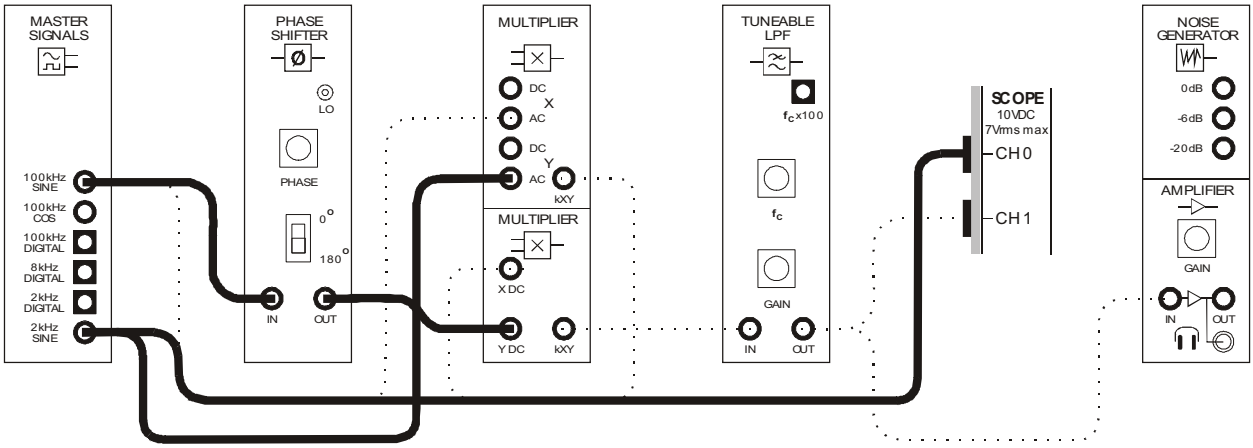

Figure 10

The set-up in Figure 10 on the previous page can be represented by the block diagram in Figure 11 below. The Phase Shifter module allows a phase error between the DSBSC modulator's carrier and the product detector's local carrier to be introduced.

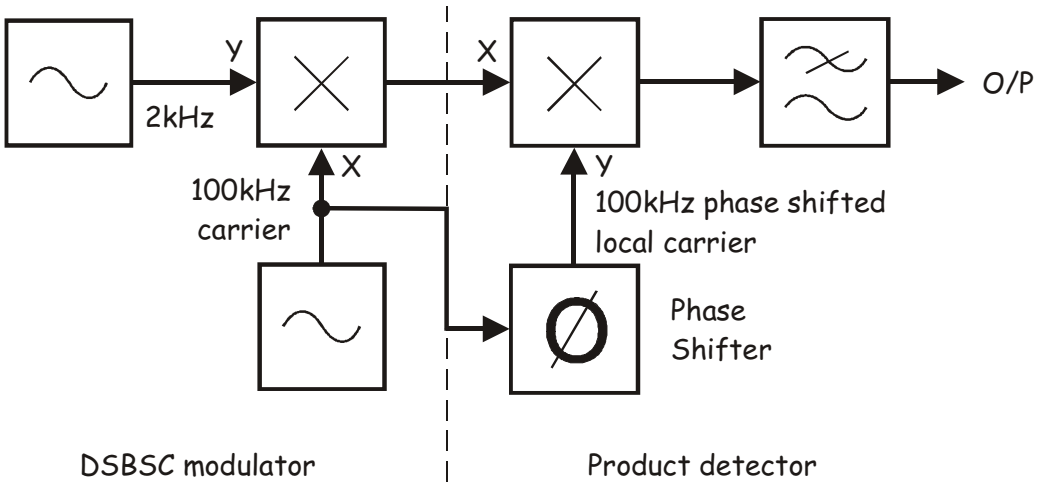

Figure 11

38. Slowly increase the Amplifier's module's gain until you can comfortably hear the demodulated 2kHz tone.

39. Vary the Phase Shifter module's soft *Phase Adjust* control left and right while watching and listening to the effect on the recovered message.

40. Use the keyboard's *TAB* and left arrow keys to turn the Phase Shifter module's soft *Phase Adjust* control anti-clockwise until the recovered message is smallest.

Question 4

Given the size of the recovered message's amplitude, what is the likely phase error between the two carriers? **Tip:** If you're not sure about the answer to this question (and the next one), reread the notes on page 9-13.

41. Verify your answer to Question 4 by connecting the scope's Channel 0 input to the Master Signals module's *100kHz SINE* output, its Channel 1 input to the Phase Shifter module's output and setting its *Timebase* control to the *5µs/div* setting.

42. Use the keyboard's *TAB* and left arrow keys to adjust the Phase Shifter module's soft *Phase Adjust* control until the two signals are in phase.

Question 5
Given the two carriers are in phase, what should the amplitude of the recovered message be?

---

43. Verify your answer to Question 5 by reconnecting the scope's Channel 0 input to the Master Signals module's *2kHz SINE* output, reconnecting its Channel 1 input to the Tuneable Low-pass Filter module's output and setting its *Timebase* control back to the *100µs/div* setting.



Ask the instructor to check your work before continuing.

The effect of frequency errors
When there's a frequency error between the DSBSC signal's carrier and the product detector's local carrier, there is a corresponding frequency error in the two products that usually coincide. One is at the message frequency minus the error and the other is at the error frequency plus the error.

If the error is small (say 0.1Hz) the two signals will alternately reinforce and cancel each other which can render the message periodically inaudible but otherwise intelligible. If the frequency error is larger (say 5Hz) the message is reasonably intelligible but fidelity is poor. When frequency errors are large, intelligibility is seriously affected.

The next part of the experiment lets you observe the effects of carrier frequency error.

44. Launch and run the NI ELVIS II Function Generator VI.

45. Adjust the function generator's soft controls for an output with the following specifications:

- Waveshape: Sine
- Frequency: 100kHz exactly
- Amplitude: 4Vpp
- DC Offset: 0V

 © 2008 Emona Instruments

46. Disconnect the leads to the Phase Shifter module and modify the set-up as shown in Figure 12 below.

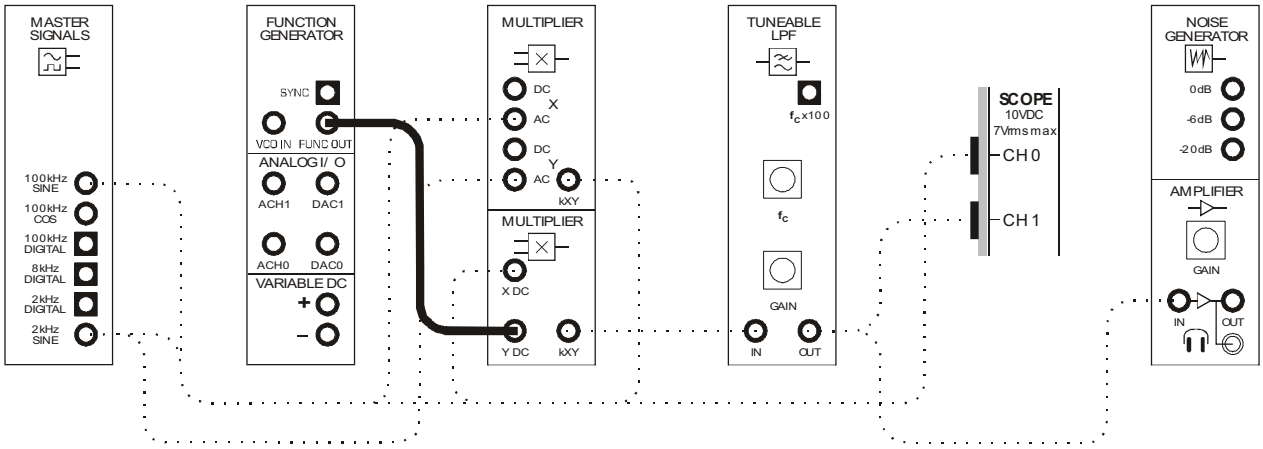

Figure 12

The entire set-up can be represented by the block diagram in Figure 13 below. The function generator allows the local oscillator to be completely frequency (and phase) independent of the DSBSC modulator.

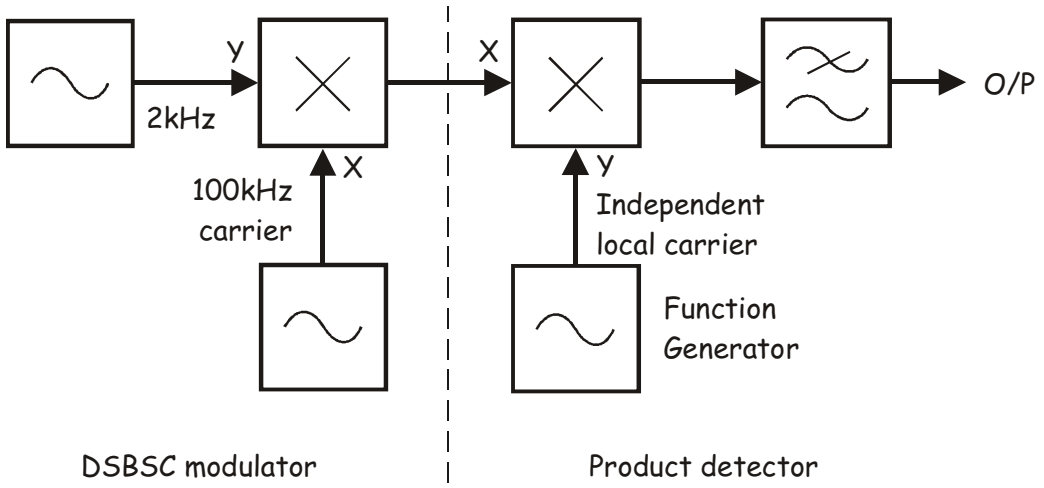

Figure 13

47. If you're not doing so already, listen to the recovered message using the headphones.

48. Compare the scope's frequency measurements for the original message and the recovered message.

    Note 1: You should find that they're very close in frequency.

    Note 2: You'll notice that the volume of the recovered messages varies. This is due to the phase error between the two carriers and should be ignored for the following steps.

49. Reduce the function generator's output frequency to 99.8kHz.

50. Give the function generator a moment to achieve the correct frequency and note the change in the tone of recovered message.

    Tip: If you can't remember what 2kHz sounds like, set function generator's output to 100kHz for a moment then return it to 99.8kHz.

51. Experiment with other local carrier frequencies around 100kHz and listen to the effect on the recovered message.

52. Return the function generator's output to 100kHz.

53. Disconnect the plugs to the Master Signals module's *2kHz SINE* output and connect them to the Speech module's output.

54. Hum and talk into the microphone to check that the whole set-up is still working correctly.

55. Vary the function generator's frequency again and listen to the effect of an unsynchronised local carrier on speech.



Ask the instructor to check your work before finishing.

 © 2008 Emona Instruments

Name: _____

Class: _____

10 - SSBSC modulation and demodulation

Experiment 10 – SSBSC modulation and demodulation

Preliminary discussion

Comparing the two communications systems considered earlier in this manual, DSBSC offers considerable power savings over AM (at least 66%) because a carrier is not transmitted. However, both systems generate and transmit *sum and difference* frequencies (the upper and lower sidebands) and so they have the same bandwidth for the same message signal.

As its name implies, the *Single Sideband Suppressed Carrier* (SSBSC or just SSB) system transmits only one sideband. In other words, SSB transmits either the sum **or** the difference frequencies but not both. Importantly, it doesn't matter which sideband is used because they both contain all of the information in the original message.

In transmitting only one sideband, SSB requires only half the bandwidth of DSBSC and AM which is a significant advantage.

Figure 1 below shows a simple message signal and an unmodulated carrier. It also shows the result of modulating the carrier with the message using SSBSC. If you look closely, you'll notice that the modulated carrier is not the same frequency as either the message or the carrier.

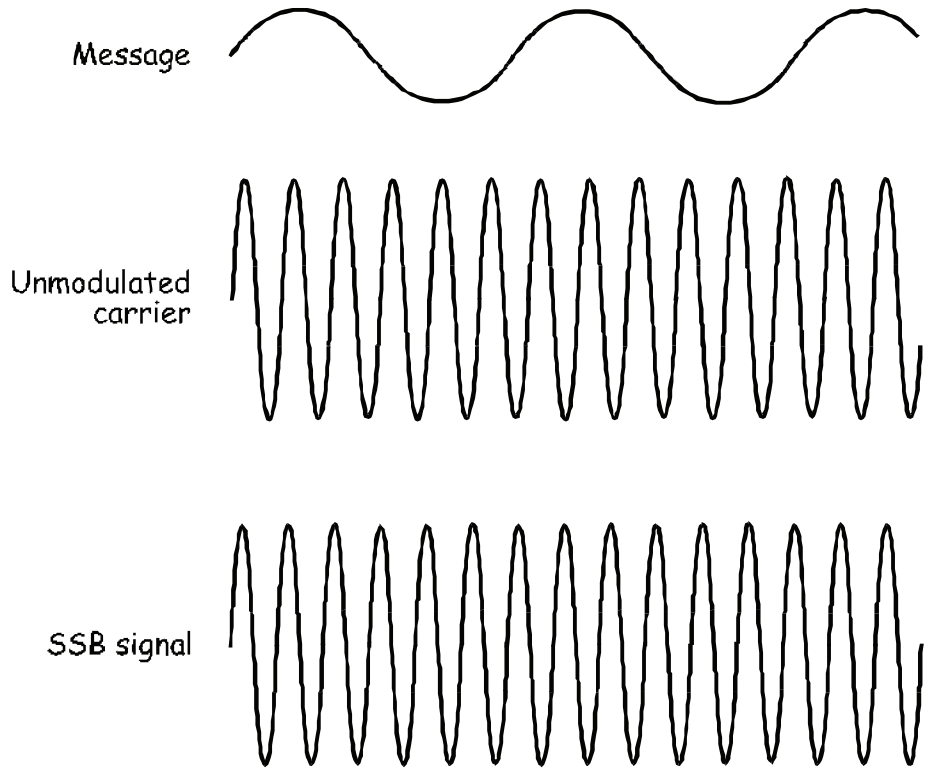

Figure 1

A common method of generating SSB simply involves generating a DSBSC signal then using a filter to pick out and transmit only one of the sidebands. This is known as the *filter method*. However, the two sidebands in a DSBSC signal are close together in frequency and so specialised filters must be used. This means that the filters for non-mainstream communications systems can be expensive.

Another way of generating SSB that is becoming increasingly popular is called the *phasing method*. This uses a technique called *phase discrimination* to cancel out one of the sidebands at the generation stage (instead of filtering it out afterwards).

In telecommunications theory, the mathematical model that defines this process is:

SSB = (message × carrier) + (message with 90° of phase shift × carrier with 90° of phase shift)

If you look closely at the equation you'll notice that it's the sum of two multiplications. When the message is a simple sinewave the solution of the two multiplications tells us that four sinewaves are generated. Depending on whether the message's phase shift is +90° or -90° their frequencies and phase differences are:

These…	Or these…
▪ Carrier + message	▪ Carrier + message
▪ Carrier - message	▪ Carrier - message
▪ Carrier + message	▪ Carrier + message (180° phase shifted)
▪ Carrier - message (180° phase shifted)	▪ Carrier – message

Regardless of whether the message's phase shift is +90° or -90°, when the four sinewaves are added together, two of them are in phase and add together to produce one sinewave (either *carrier + message* or *carrier – message*) and two of the sinewaves are phase inverted and completely cancel. In other words, the process produces only a sum or difference signal (that is, just one sideband).

 © 2008 Emona Instruments

The block diagram that implements the phasing type of SSB modulator is shown in Figure 2 below.

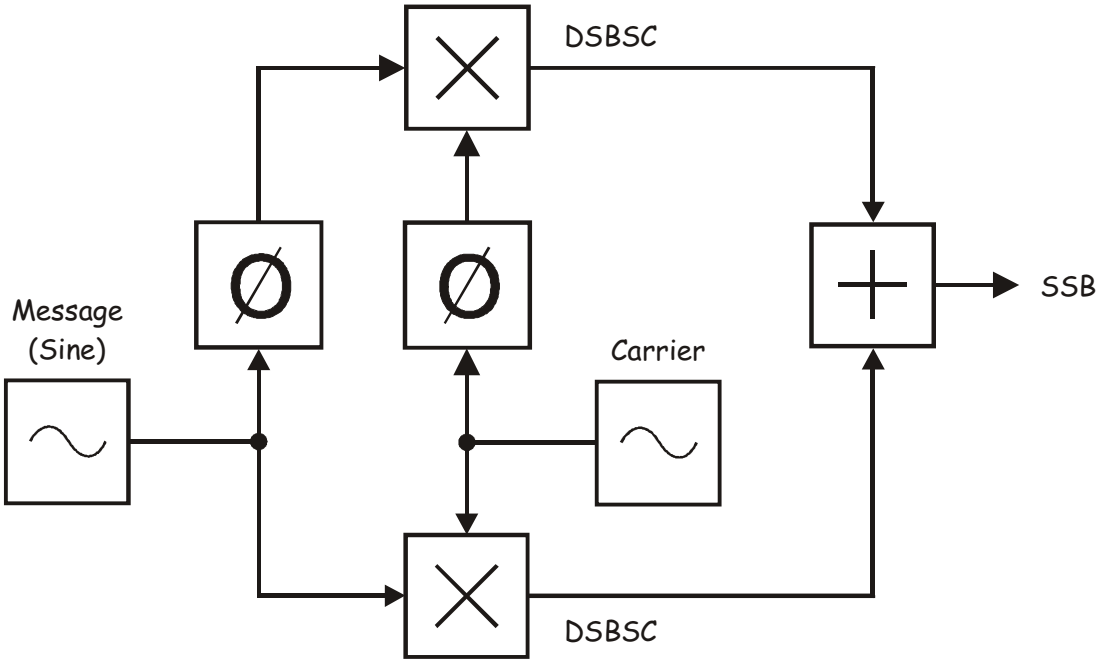

Figure 2

As SSB signals don't contain a carrier, they must be demodulated using product detection in the same way as DSBSC signals (the product detector's operation is summarised in the preliminary discussion of Experiment 9).

The experiment

For this experiment you'll use the Emona DATEx to generate an SSB signal by implementing the mathematical model for the phasing method. You'll then use a product detector (with a stolen carrier) to reproduce the message.

Importantly, you'll only do so for a sinewave message (that is, you'll not SSB modulate then demodulate speech). There's a practical reason for this. The phase shift introduced by the DATEx Phase Shifter module is frequency dependent (that is, for any given setting, the phase shift is different at different frequencies). A wideband phase shifting circuit is necessary to provide 90° of phase shift for all of the sinewaves in a complex message like speech.

It should take you about 40 minutes to complete this experiment.

Equipment

- Personal computer with appropriate software installed
- NI ELVIS II plus USB cable and power pack
- Emona DATEx experimental add-in module
- Two BNC to 2mm banana-plug leads
- Assorted 2mm banana-plug patch leads

Procedure

Part A - Generating an SSB signal using a simple message

1. Ensure that the NI ELVIS II power switch at the back of the unit is off.

2. Carefully plug the Emona DATEx experimental add-in module into the NI ELVIS II.

3. Set the *Control Mode* switch on the DATEx module (top right corner) to *PC Control*.

4. Connect the NI ELVIS II to the PC using the USB cable.

   Note: This may already have been done for you.

5. Turn on the NI ELVIS II power switch at the rear of the unit then turn on its *Prototyping Board Power* switch at the top right corner near the power indicator.

6. Turn on the PC and let it boot-up.

7. Launch the NI ELVISmx software.

8. Launch and run the NI ELVIS II Function Generator VI.

9. Adjust the function generator using its soft controls for an output with the following specifications:

   - Waveshape: Sine
   - Frequency: 10kHz exactly
   - Amplitude: 4Vpp
   - DC Offset: 0V

10. Minimise the function generator's VI.

 © 2008 Emona Instruments

11. Connect the set-up shown in Figure 3 below.

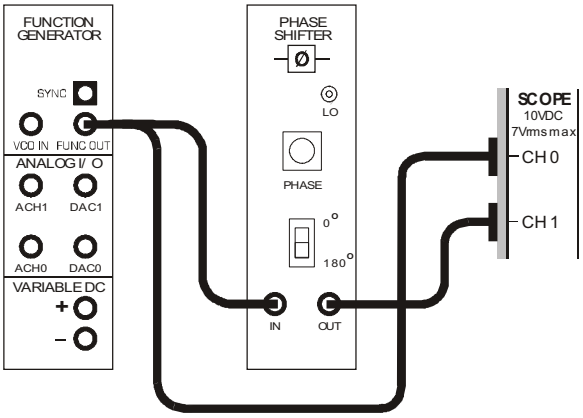

Figure 3

This set-up can be represented by the block diagram in Figure 4 below. It is used to set up two message signals that are out of phase with each other.

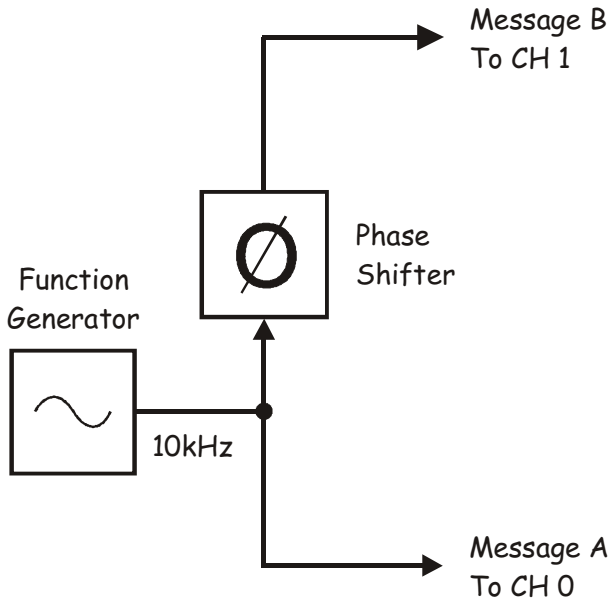

Figure 4

12. Launch the DATEx soft front-panel (SFP) and check that you have soft control over the DATEx board.

13. Locate the Phase Shifter module on the DATEx SFP and set its soft *Phase Change* control to the *180°* position.

14. Set the Phase Shifter module's soft *Phase Adjust* control to about the middle of its travel.

15. Launch and run the NI ELVIS II Oscilloscope VI.

16. Set up the scope per the procedure in Experiment 1 ensuring that the *Trigger Source* control is set to *CH 0*.

17. Adjust the scope's *Timebase* control to view two or so cycles of the function generator's output.

18. Activate the scope's Channel 1.

19. Check that the two message signals are out of phase with each other.

    Note: At this stage, it doesn't matter what the phase difference is.

20. Modify the set-up as shown in Figure 5 below.

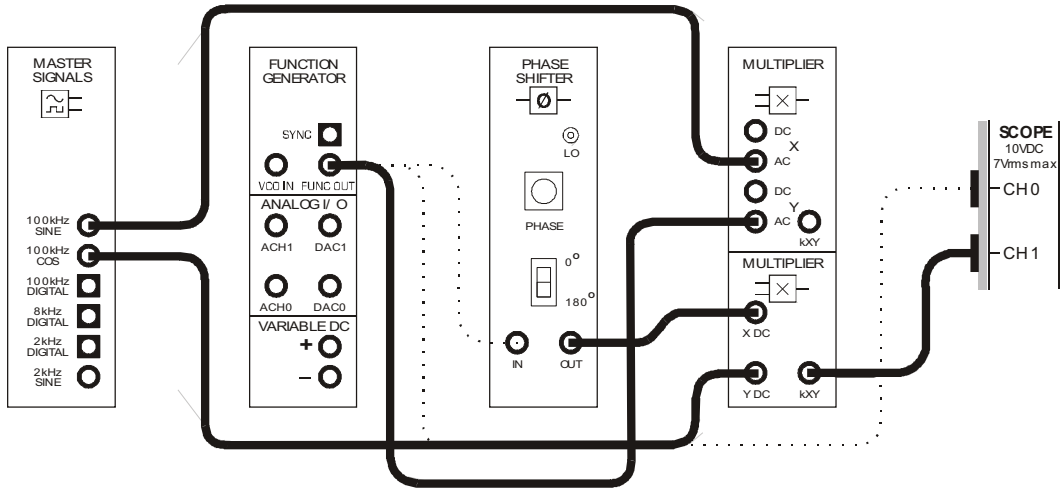

Figure 5

This set-up can be represented by the block diagram in Figure 6 on the next page. It is used to multiply the two message signals with two 100kHz sinewaves (the carriers) that are exactly 90° out of phase with each other.

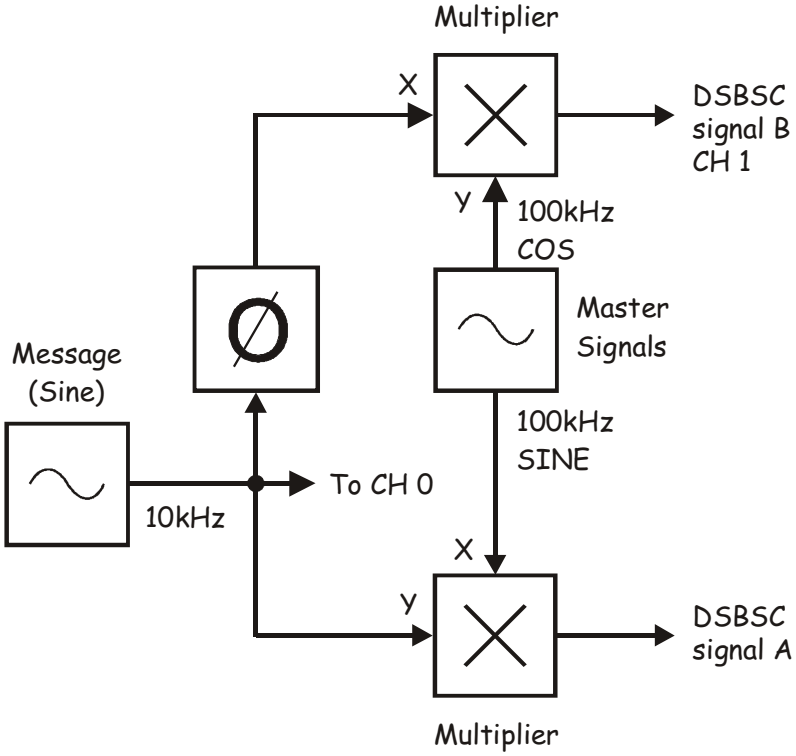

Figure 6

21. Use the scope to check that the lower Multiplier module's output is a DSBSC signal.

    Tip: Temporarily set the scope's Channel 1 *Scale* control to the *2V/div* position to do this.

22. Disconnect the scope's Channel 1 input from the lower Multiplier module's output and connect it to the upper Multiplier module's output.

23. Check that the upper Multiplier module's output is a DSBSC signal as well.

24. Locate the Adder module on the DATEx SFP and set its soft *G* and *g* controls to about the middle of their travel.

25. Modify the set-up as shown in Figure 7 below.

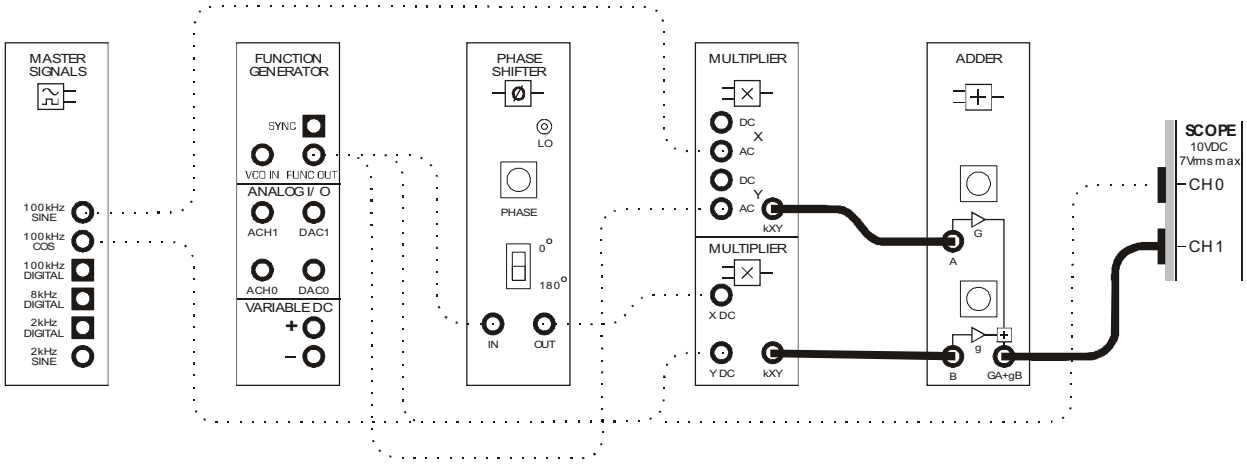

Figure 7

This set-up can be represented by the block diagram in Figure 8 below. The Adder module is used to add the two DSBSC signals together. The phase relationships between the sinewaves in the DSBSC signals means that two of them (one in each sideband) reinforce each other and the other two cancel each other out.

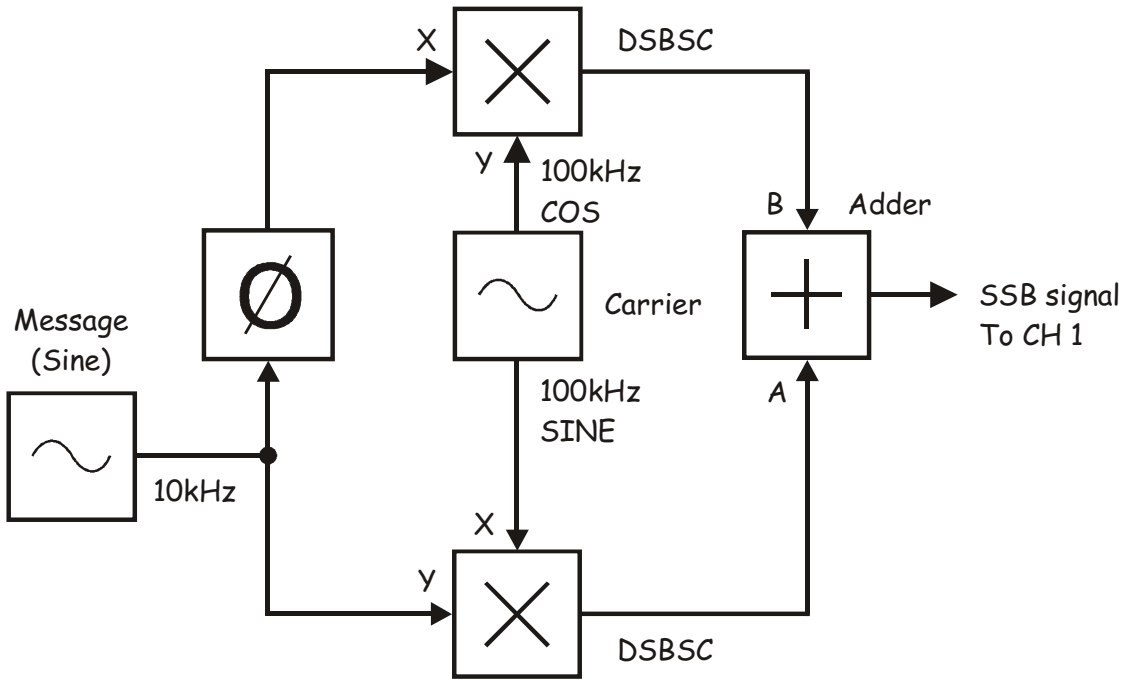

Figure 8

Question 1
The signal out of the Adder module is highly unlikely to be an SSB signal at this stage. What are two reasons for this? **Tip:** If you're not sure, one of them can be worked out by reading the preliminary discussion.



Ask the instructor to check your work before continuing.

The next part of the experiment gets you to make the fine adjustments necessary to turn the set-up into a true SSB modulator.

26. Deactivate the scope's Channel 0 input.

27. Disconnect the patch lead to the Adder module's *B* input.

    Note: This removes the signal on the Adder module's *B* input from the set-up's output.

28. Adjust the Adder module's soft *G* control to obtain a 4Vp-p output.

    Tip: Remember that you can use the keyboard's *TAB* and arrow keys for fine adjustment of the DATEx SFP's controls.

29. Reconnect the Adder module's *B* input and disconnect the patch lead to its *A* input.

    Note: This removes the signal on the Adder module's *A* input from the set-up's output.

30. Adjust the Adder module's soft *g* control to obtain a 4Vp-p output.

31. Reconnect the patch lead to the Adder module's *A* input.

The gains of the Adder module's two inputs are now nearly the same. Next, the correct phase difference between the messages must be achieved.

32. Slowly vary the Phase Shifter module's soft *Phase Adjust* control left and right and observe the effect on the envelopes of the set-up's output.

    Note: For most of the soft *Phase Adjust* control's travel, you'll get an output that looks like a DSBSC signal. However, if you adjust the control carefully, you'll find that you're able to flatten-out the output signal's envelope.

33. Set the scope's Channel 1 *Scale* control to the *500mV/div* position.

34. Adjust the Phase Shifter module's soft *Phase Adjust* control to make the envelopes as "flat" as possible.

The phase difference between the two messages is now nearly 90°.

35. Tweak the Adder module's soft *G* control to see if you can make the output's envelopes flatter.

36. Tweak the Phase Shifter module's soft *Phase Adjust* control to see if you can make the output's envelopes flatter still.

Once the envelopes are as flat as you can get, the gains of the Adder module's two inputs are very close to each other and the phase difference between the two messages are very close to 90°. That being the case, the signal out of the Adder module is now SSBSC.

Question 2
How many sinewaves does this SSB signal consist of? **Tip:** If you're not sure, see the preliminary discussion.

Question 3
For the given inputs to the SSB modulator, what two frequencies can this signal be?



Ask the instructor to check your work before continuing.

 © 2008 Emona Instruments

Part B - Spectrum analysis of an SSB signal

The next part of this experiment let's you analyse the frequency domain representation of the SSB signal to see if its spectral composition matches your answers to Questions 2 and 3.

37. Suspend the scope's operation by clicking on its *Stop* control once.

    Note: The scope's display should freeze and its hardware has been deactivated. This is a necessary step as the scope and signal analyzer share hardware resources and so they cannot be operated simultaneously.

38. Launch and run the NI ELVIS II Dynamic Signal Analyzer VI.

39. Set up the signal analyzer per the procedure in Experiment 7 (page 7-10).

40. Activate the signal analyzer's cursors by checking the *Cursors On* box.

41. Align *C1* with the most significant sinewave in the signal's spectrum and determine its frequency.

    Question 4

    Based on your measurement for the step above, which sideband does your SSB modulator generate?

    _____

42. Align *C1* with some of the other significant sinewaves close to this sideband and note their frequencies.

    Note: You should find that there's a sinewave at the carrier frequency and another at the frequency for the other sideband. Importantly, despite appearances, these signals are very small relative to the significant sideband (the scale used for the Y-axis is decibels which is not a linear unit of measurement).

    Question 5

    Give two reasons for the presence of a small amount of the other sideband.

    _____

    _____

43. Tweak the Phase Shifter module's soft *Phase Adjust* control and note the effect on the size of the carrier and other sideband.

    Note: Give the signal analyzer's display time to update after each adjustment.

    Question 6
    Why doesn't varying the Phase Shift module's *Phase Adjust* control affect the size of the carrier in the SSBSC signal?

    _____

    _____

44. Adjust the two controls to obtain the smallest size for the insignificant sideband.

45. Close the Signal Analyzer's VI.

46. Restart the scope's VI by clicking on its *Run* control once.

47. Note whether there is any improvement in the SSB signal's envelope (that is, note whether the envelope is any flatter).



Ask the instructor to check your work before continuing.

© 2008 Emona Instruments

Part C – Using the product detector to recover the message

48. Reactivate the scope's Channel 0 input and return the Channel 1 *Scale* control to the *1V/div* position.

49. Locate the Tuneable Low-pass Filter module on the DATEx SFP and set its soft *Gain* control to about the middle of its travel.

50. Turn the Tuneable Low-pass Filter module's soft *Cut-off Frequency Adjust* control fully clockwise.

51. Modify the set-up as shown in Figure 9 below.

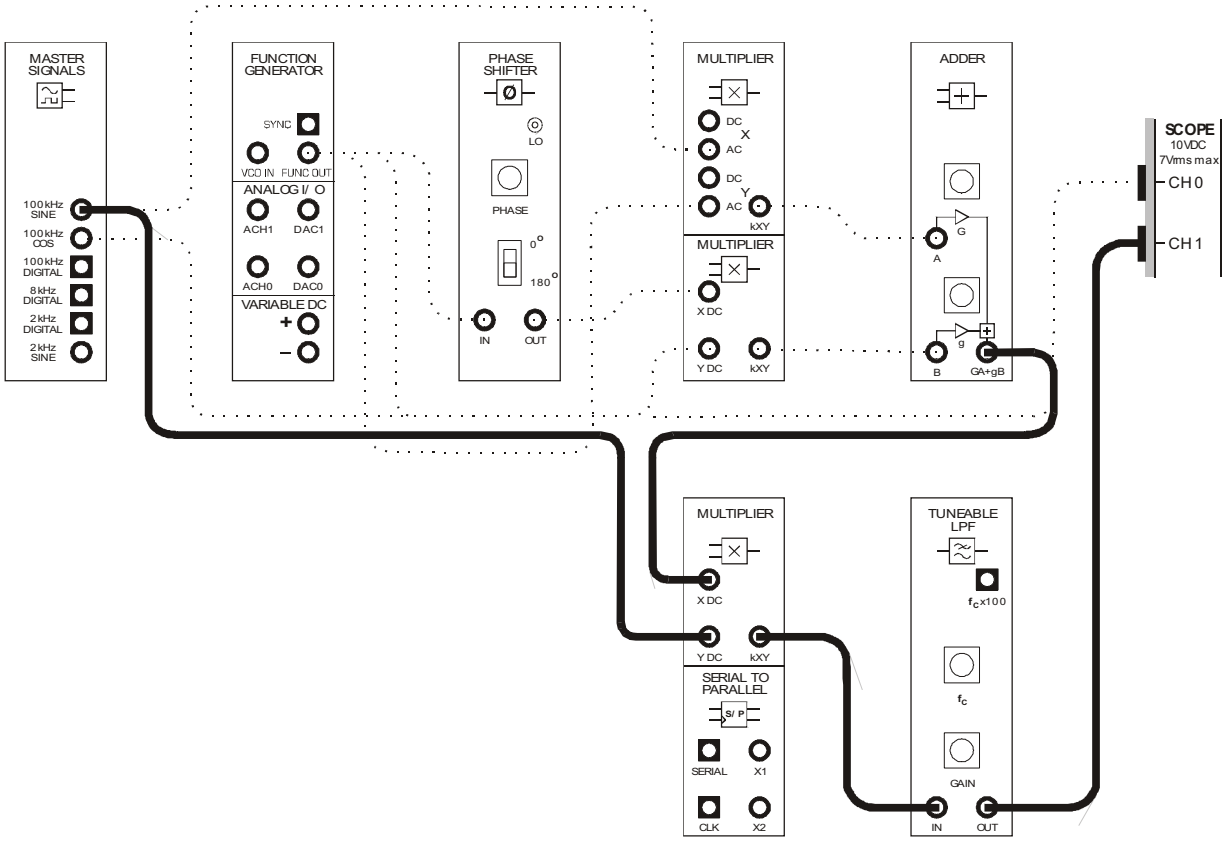

Figure 9

The additions to the set-up shown in Figure 9 on the previous page can be represented by the block diagram in Figure 10 below. The Multiplier and Tuneable Low-pass Filter modules are used to implement a product detector which demodulates the original message from the SSB signal.

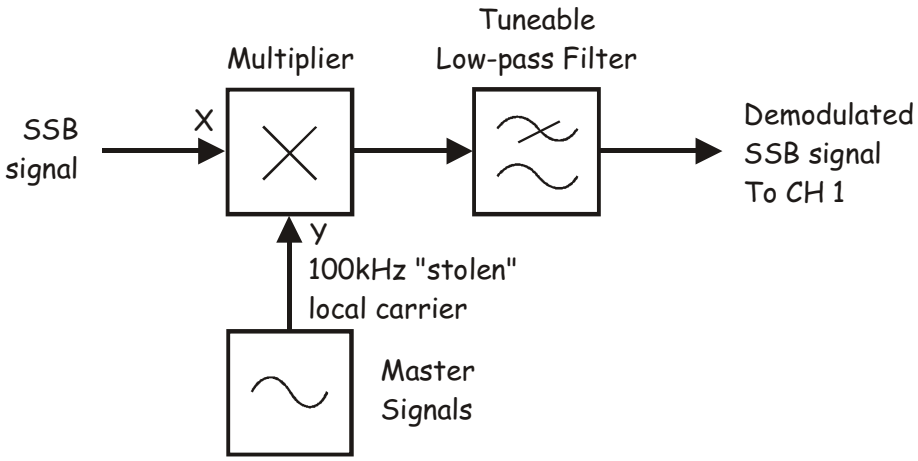

Figure 10

52. Use the scope to compare the original message with the recovered message.

Question 7
What is the relationship between the original message and the recovered message?

Ask the instructor to check your work before finishing.

Name: _____

Class: _____

11 - Frequency modulation

Experiment 11 – Frequency modulation

Preliminary discussion

A disadvantage of the AM, DSBSC and SSB communication systems is that they are susceptible to picking up electrical noise in the transmission medium (the *channel*). This is because noise changes the amplitude of the transmitted signal and the demodulators of these systems are designed to respond to amplitude variations.

As its name implies, frequency modulation (FM) uses a message's amplitude to vary the frequency of a carrier instead of its amplitude. This means that the FM demodulator is designed to look for changes in frequency instead. As such, it is less affected by amplitude variations and so FM is less susceptible to noise. This makes FM a better communications system in this regard.

There are several methods of generating FM signals but they all basically involve an oscillator with an electrically adjustable frequency. The oscillator uses an input voltage to affect the frequency of its output. Typically, when the input is 0V, the oscillator outputs a signal at its *rest* frequency (also commonly called the *free-running* or *centre* frequency). If the applied voltage varies above or below 0V, the oscillator's output frequency deviates above and below the rest frequency. Moreover, the amount of deviation is affected by the amplitude of the input voltage. That is, the bigger the input voltage, the greater the deviation.

Figure 1 below shows a bipolar squarewave message signal and an unmodulated carrier. It also shows the result of frequency modulating the carrier with the message.

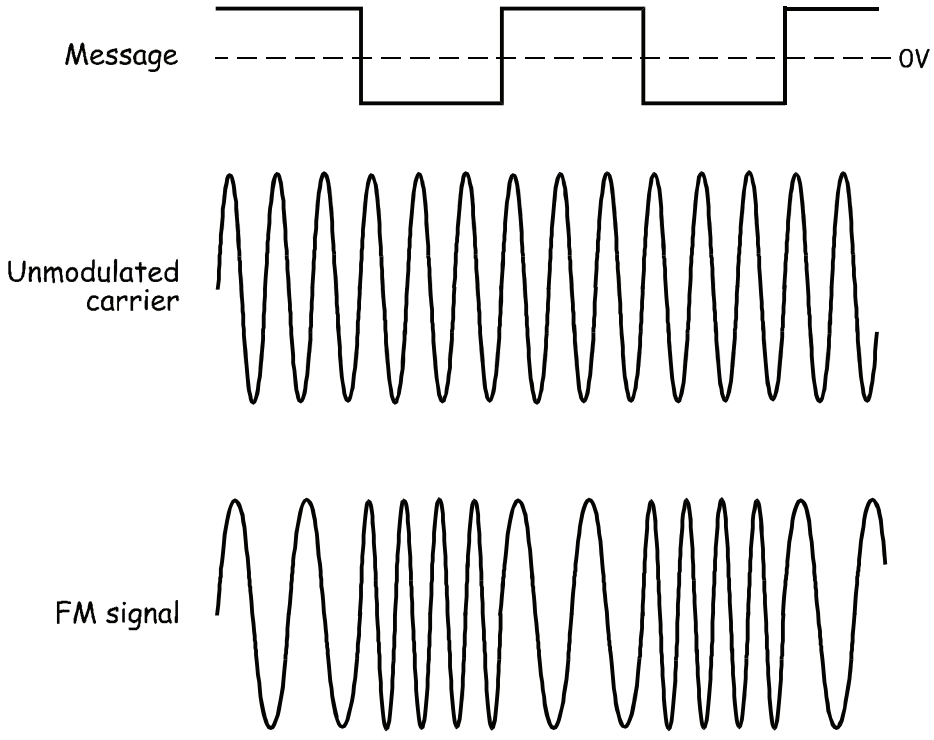

Figure 1

There are a few things to notice about the FM signal. First, its envelopes are flat – recall that FM doesn't vary the carrier's amplitude. Second, its period (and hence its frequency) changes when the amplitude of the message changes. Third, as the message alternates above and below 0V, the signal's frequency goes above and below the carrier's frequency. (Note: It's equally possible to design an FM modulator to cause the frequency to change in the opposite direction to the change in the message's polarity.)

Before discussing FM any further, an important point must be made here. A squarewave message has been used in this discussion to help you visualise how an FM carrier responds to its message. In so doing, Figure 1 suggests that the resulting FM signal consists of only two sinewaves (one at a frequency above the carrier and one below). However, this isn't the case. For reasons best left to your instructor to explain, the spectral composition of the FM signal in Figure 1 is much more complex than implied.

This highlights one of the important differences between FM and the modulation schemes discussed earlier. The mathematical model of an FM signal predicts that even for a simple sinusoidal message, the result is a signal that potentially contains many sinewaves. In contrast, for the same sinusoidal message, an AM signal would consist of three sinewaves, a DSBSC signal would consist of two and an SSBSC signal would consist of only one. This doesn't automatically mean that the bandwidth of FM signals is wider than AM, DSBSC and SSBSC signals (for the same message signal). However, in the practical implementation of FM communications, it usually is.

There's another important difference between FM and the modulation schemes discussed earlier. The power in AM, DSBSC and SSBSC signals varies depending on their modulation index. This occurs because the carrier's RMS voltage is fixed but the RMS sideband voltages are proportional to the signals' modulation index. This is not true of FM. The RMS voltage of the carrier and sidebands varies up and down as the modulation index changes such that the square of their voltages always equal the square of the unmodulated carrier's RMS voltage. That being the case, the power in FM signals is constant.

Finally, when reading about the operation of an FM modulator you may have recognised that there is a module on the Emona DATEx that operates in the same way - the VCO output of the function generator. In fact a voltage-controlled oscillator is sometimes used for FM modulation (though there are other methods with advantages over the VCO).

The experiment

For this experiment you'll generate a real FM signal using the VCO module on the Emona DATEx. First you'll set up the VCO module to output an unmodulated carrier at a known frequency. Then you'll observe the effect of frequency modulating its output with a squarewave then speech. You'll then use the NI ELVIS II Dynamic Signal Analyzer to observe the spectral composition of an FM signal in the frequency domain and examine the distribution of power between its carrier and sidebands for different levels of modulation.

It should take you about 40 minutes to complete this experiment.

Equipment

- Personal computer with appropriate software installed
- NI ELVIS II plus USB cable and power pack
- Emona DATEx experimental add-in module
- Two BNC to 2mm banana-plug leads
- Assorted 2mm banana-plug patch leads

Procedure

Part A – Frequency modulating a squarewave

1. Ensure that the NI ELVIS II power switch at the back of the unit is off.

2. Carefully plug the Emona DATEx experimental add-in module into the NI ELVIS II.

3. Set the *Control Mode* switch on the DATEx module (top right corner) to *PC Control*.

4. Connect the NI ELVIS II to the PC using the USB cable.

   Note: This may already have been done for you.

5. Turn on the NI ELVIS II power switch at the rear of the unit then turn on its *Prototyping Board Power* switch at the top right corner near the power indicator.

6. Turn on the PC and let it boot-up.

7. Launch the NI ELVISmx software.

8. Launch and run the NI ELVIS II Function Generator VI.

9. Adjust the function generator using its soft controls for an output with the following specifications:

   - Waveshape: Sine
   - Frequency: 20kHz
   - Amplitude: 4Vpp
   - DC Offset: 0V
   - Modulation type: FM

10. Connect the set-up shown in Figure 2 below.

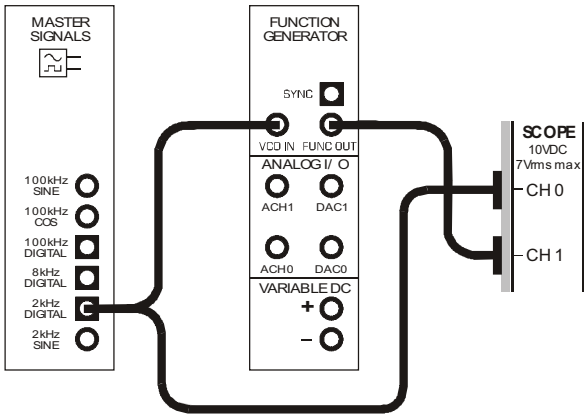

Figure 2

This set-up can be represented by the block diagram in Figure 3 below. The Master Signals module is used to provide a 2kHz squarewave message signal and the VCO is the FM modulator with a 20kHz carrier.

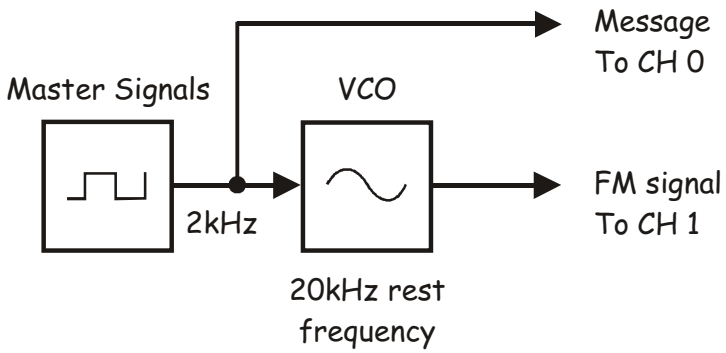

Figure 3

 © 2008 Emona Instruments

11. Launch and run the NI ELVIS II Oscilloscope VI.

12. Set up the scope per the procedure in Experiment 1 with the following changes:

    - *Timebase* control to the *100µs/div* position instead of *500µs/div*
    - *Trigger Level* to the *2.5V* position instead of *0V*

13. Activate the scope's Channel 1 input to view the FM signal on the VCO's output as well as the message signal.

Question 1
Why does the frequency of the carrier change?



Ask the instructor to check your work before continuing.

© 2008 Emona Instruments

Part B – *Generating an FM signal using speech*

So far, this experiment has generated an FM signal using a squarewave for the message. However, the message in commercial communications systems is much more likely to be speech and music. The next part of the experiment lets you see what an FM signal looks like when modulated by speech.

14. Return the scope's *Trigger Level* control to *0V*.

15. Disconnect the plugs to the Master Signals module's *2kHz SINE* output.

16. Connect them to the Speech module's output as shown in Figure 4 below.

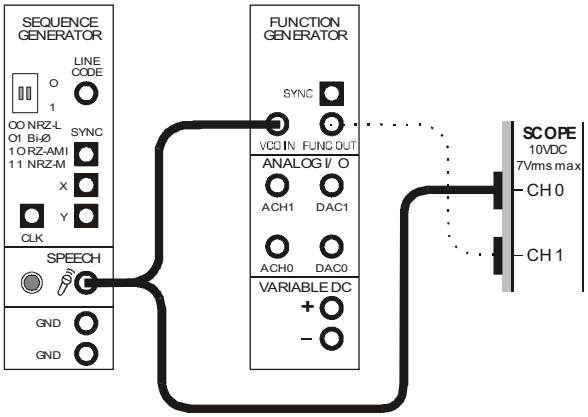

Figure 4

17. Set the scope's *Timebase* control to the *200µs/div* position.

18. Hum and talk into the microphone while watching the scope's display.

Ask the instructor to check your work before continuing.

 © 2008 Emona Instruments

Part C – Power in an FM signal

As mentioned earlier, the power in an FM signal is constant regardless of its level of modulation. This part of the experiment lets you see this for yourself.

19. Launch the DATEx soft front-panel (SFP) and check that you have soft control over the DATEx board.

20. Locate the Amplifier module on the DATEx SFP and turn soft *Gain* control fully anti-clockwise.

21. Completely dismantle the previous set-up.

22. Connect the set-up shown in Figure 5 below.

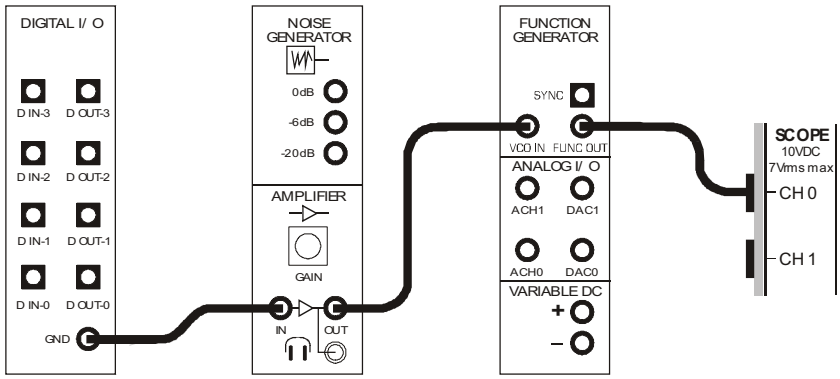

Figure 5

This set-up can be represented by the block diagram in Figure 6 on the next page. With the VCO's input connected to ground, its output is a single sinewave at 20kHz.

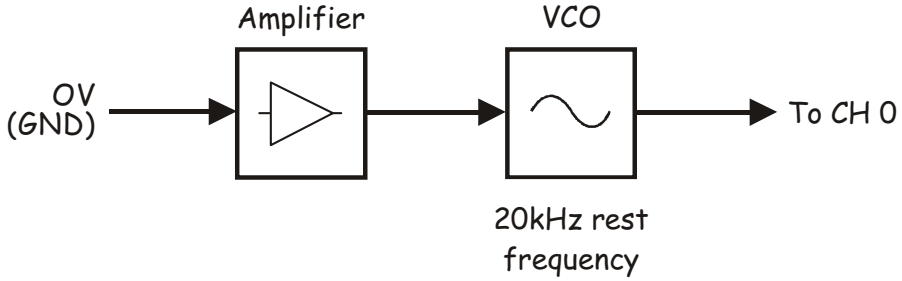

Figure 6

23. Use the scope to check that the VCO's output is a 20kHz sinewave.

24. Close the scope's VI.

25. Launch and run the NI ELVIS II Dynamic Signal Analyzer VI.

26. Adjust the signal analyzer's controls as follows:

Input Settings

- *Source Channel* to *SCOPE CH 0*
- Voltage Range to ±10V

FFT Settings

- *Frequency Span* to *60,000*
- *Resolution* to *400*
- *Window* to *7 Term B-Harris*

Averaging

- *Mode* to *RMS*
- *Weighting* to *Exponential*
- *# of Averages* to *3*

Trigger Settings

- *Type* to *Edge*

Frequency Display

- *Units* to *Linear*
- *Mode* to *RMS*
- *Scale* to *Auto*

Cursor settings

- *Cursors On* box unchecked (for now)

27. Once done, one significant sinewave should be displayed.

Note: It's important at this point to double-check that the signal analyzer's Frequency Display *Units* option is set to *Linear*.

 © 2008 Emona Instruments

28. Activate the signal analyzer's cursors by checking the *Cursors On* box.

29. Use the scope's *C1* cursor to measure the frequency of the sinewave and verify that it's the VCO's rest frequency (that is, 20kHz).

    Note: Recall that cursor measurements of frequency and voltage are difference values between *C1* and *C2*. However, when cursor *C2* is moved to the extreme left side of the display, its frequency and voltage is zero so the cursor measurements become absolute values for *C1*.

30. To the left of the cursor's frequency measurement readout is the measurement of the signal's RMS voltage. Record this in Table 1 below.

31. Square and record this voltage.

Table 1

Unmodulated Carrier V_{RMS}	Unmodulated Carrier V_{RMS}^2

Why square the signal's RMS voltage? To answer this question, remember that we're investigating the power in an FM signal but signal analyzers (and most other test equipment) can't

measure power. However, one of the power equations ($P = \frac{V_{RMS}^2}{R}$) tells us that power and the square of a signal's RMS voltage (that is, V_{RMS}^2) are proportional values. That being the case, we can investigate power in an FM signal indirectly by investigating the square of the signal's RMS voltage because whatever is true of one must also be true of the other (regardless of *R*).

32. Disconnect the plug to the *GND* socket and modify the set-up as shown in Figure 7 below.

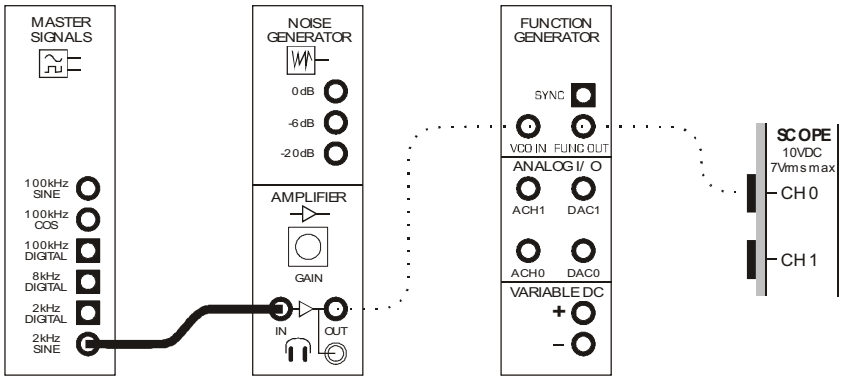

Figure 7

This set-up can be represented by the block diagram in Figure 8 below. Importantly, as the Amplifier module's minimum gain isn't zero, the carrier will now be frequency modulated by a low level message signal. This means that the signal analyzer's display will show about four sidebands. As these sidebands are small relative to the carrier, they can be better observed by temporarily setting the analyzer's *Units* option to *dB* instead of *Linear*.

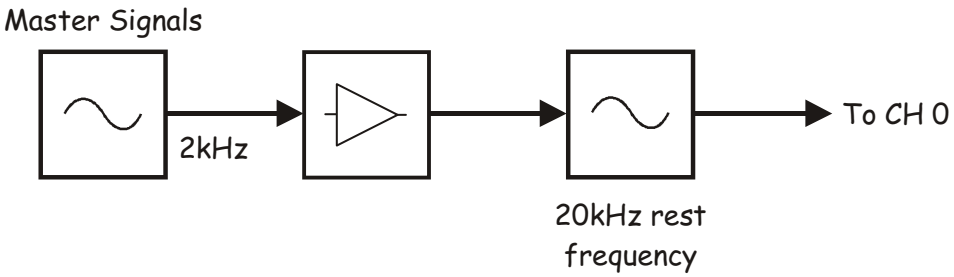

Figure 8

33. If you haven't already done so, return the analyzer's *Units* option to *Linear*.

34. Use the Amplifier module's soft *Gain* control to adjust the modulation of the FM signal slightly until only five sinewaves are clearly visible in the signal's spectrum.

35. Use the cursor to measure the RMS voltage of these sinewaves and record them in Table 2 on the next page.

 © 2008 Emona Instruments

36. Square and record the voltages.

37. Add and record the squared voltages.

Table 2

Sinewave	V_{RMS}	V_{RMS}^2
1		
2		
3		
4		
5		
	Total	

38. Use the Amplifier module's soft *Gain* control to increase the modulation of the FM signal until the carrier drops to zero for the first time.

39. Repeat Steps 35 and 37 for the six most significant sinewaves in the signal recording your measurements in Table 3 below.

Table 3

Sinewave	V_{RMS}	V_{RMS}^2
1		
2		
3		
4		
5		
6		
	Total	

Question 2
How do the totals in Tables 2 and 3 compare with each other and the value in Table 1?

Question 3
What do these measurements help to prove? Explain your answer.



Ask the instructor to check your work before continuing.

© 2008 Emona Instruments

Part D – Bandwidth of an FM signal

The spectral composition of an FM signal can be complex and consist of many sidebands. Usually, many of them are relatively small in size and so an engineering decision must be made about how many of them to include as part of the signal's bandwidth. There are several standards in this regard and a common one involves including all sidebands that are equal to or greater than 1% of the unmodulated carrier's power (or V_{RMS}^2). This part of the experiment lets you use this criterion to measure FM signal bandwidth.

40. Use the signal analyzer's *C1* cursor to identify the lowest frequency sinewave in the FM signal with a V_{RMS}^2 equal to or greater than 1% of the value in Table 1.

    Note: You have to do this by measuring the RMS voltage of the smallest sinewaves and square the value until you find the first one with a V_{RMS}^2 equal to or greater than 1% of the value in Table 1.

41. Use the signal analyzer's *C2* cursor to identify the highest frequency sinewave in the FM signal with a voltage equal to or greater than 1% of the value in Table 1.

42. The signal analyzer's *df (Hz)* reading is a measurement of the difference in frequency between its cursors. Following Steps 40 and 41, this reading is the FM signal's bandwidth. Record this value in Table 4 below.

Table 4

FM signal's bandwidth

Question 4

Calculate the bandwidth of a 20kHz carrier amplitude modulated by a 2kHz sinewave.

Question 5

How does the FM signal's bandwidth compare to an AM signal's bandwidth for the same inputs?



Ask the instructor to check your work before continuing.

43. Increase the Amplifier module's gain until the cursor on its soft *Gain* control points to the 9 o'clock position.

44. Repeat steps 40 to 42 recording your measurement in Table 5 below.

Table 5

FM signal's bandwidth

Question 6

What is the relationship between the message signal's amplitude and the FM signal's bandwidth?



Ask the instructor to check your work before finishing.

© 2008 Emona Instruments

Name: _____

Class: _____

12 - FM demodulation

Experiment 12 – FM demodulation

Preliminary discussion

There are as many methods of demodulating an FM signal as there are of generating one. Examples include: the *slope detector*, the *Foster-Seeley discriminator,* the *ratio detector*, the *phase-locked loop* (PLL), the *quadrature FM demodulator* and the *zero-crossing detector*. It's possible to implement several of these methods using the Emona DATEx but, for an introduction to the principles of FM demodulation, the zero-crossing detector is used here.

The zero-crossing detector

The zero-crossing detector is a simple yet effective means of recovering the message from FM signals. Its block diagram is shown in Figure 1 below.

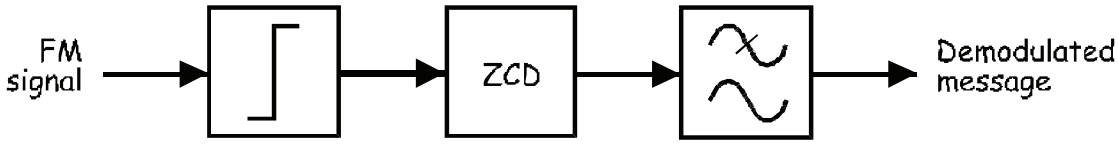

Figure 1

The received FM signal is first passed through a comparator to clip it heavily, effectively converting it to a squarewave. This allows the signal to be used as a trigger signal for the zero-crossing detector circuit (ZCD).

The ZCD generates a pulse of fixed duration every time the squared-up FM signal crosses zero volts (either on the positive or the negative transition but not both). Given the squared-up FM signal is continuously crossing zero, the ZCD effectively converts the squarewave to a rectangular wave with a fixed *mark* time.

When the FM signal's frequency changes (in response to the message), so does the rectangular wave's frequency. Importantly though, as the rectangular wave's mark is fixed, changing its frequency is achieved by changing the duration of the space and hence the signal's mark/space ratio (or *duty cycle*). This is shown in Figure 2 on the next page using an FM signal that only switches between two frequencies (because it has been generated by a squarewave for the message).

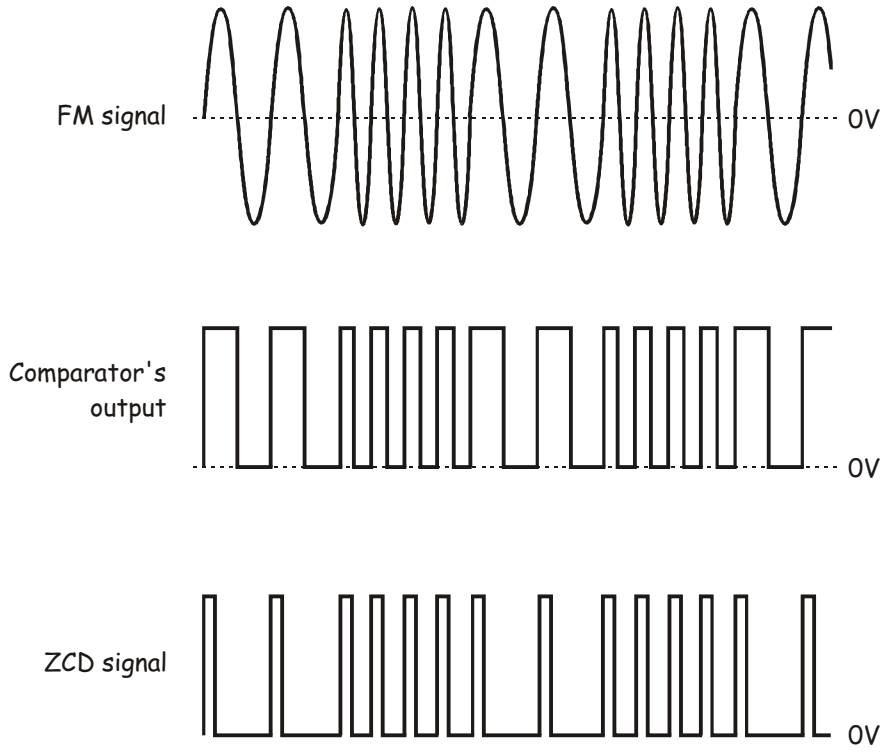

Figure 2

Recall from the theory of complex waveforms, pulse trains are actually made up of sinewaves and, in the case of Figure 2 above, a DC voltage. The size of the DC voltage is affected by the pulse train's duty cycle. The greater its duty cycle, the greater the DC voltage.

That being the case, when the FM signal in Figure 2 above switches between the two frequencies, the DC voltage that makes up the rectangular wave out of the ZCD changes between two values. In others words, the DC component of the rectangular wave is a copy of the squarewave that produced the FM signal in the first place. Recovering this copy is a relatively simple matter of picking out the changing DC voltage using a low-pass filter.

Importantly, this demodulation technique works equally well when the message is a sinewave or speech.

The experiment

For this experiment you'll use the Emona DATEx to generate an FM signal using a VCO. Then you'll set-up a zero-crossing detector and verify its operation for variations in the message's amplitude.

It should take you about 50 minutes to complete this experiment.

 © 2008 Emona Instruments

Equipment

- Personal computer with appropriate software installed
- NI ELVIS II plus USB cable and power pack
- Emona DATEx experimental add-in module
- Two BNC to 2mm banana-plug leads
- Assorted 2mm banana-plug patch leads
- One set of headphones (stereo)

Procedure

Part A – Setting up the FM modulator

To experiment with FM demodulation you need an FM signal. The first part of the experiment gets you to set one up. To make viewing the signals around the demodulator possible, we'll start with a DC voltage for the message.

1. Ensure that the NI ELVIS II power switch at the back of the unit is off.

2. Carefully plug the Emona DATEx experimental add-in module into the NI ELVIS II.

3. Set the *Control Mode* switch on the DATEx module (top right corner) to *PC Control*.

4. Connect the NI ELVIS II to the PC using the USB cable.

   Note: This may already have been done for you.

5. Turn on the NI ELVIS II power switch at the rear of the unit then turn on its *Prototyping Board Power* switch at the top right corner near the power indicator.

6. Turn on the PC and let it boot-up.

7. Launch the NI ELVISmx software.

8. Launch and run the NI ELVIS II Function Generator VI.

9. Adjust the function generator for an output with the following specifications:

   - Waveshape: Sine
   - Frequency: 15kHz
   - Amplitude: 4Vpp
   - DC Offset: 0V
   - Modulation type: FM

10. Check that the function generator's *Signal Route* option (near the bottom right-hand corner of the VI is set to *Prototyping Board*.

    Important note: There is the potential for a hardware conflict when using the scope's external triggering input (*TRIG*) at the same time as the function generator. This is because the connector for the *TRIG* input doubles as an output for the function generator when its *Signal Route* option is set to *FGEN BNC*. To avoid hardware conflicts always set the *Signal Route* to *Prototyping Board*.

11. Launch and run the NI ELVIS II Variable Power Supplies VI.

12. Turn the Variable Power Supplies negative output soft *Voltage* control fully anti-clockwise to output 0V.

13. Connect the set-up shown in Figure 3 below.

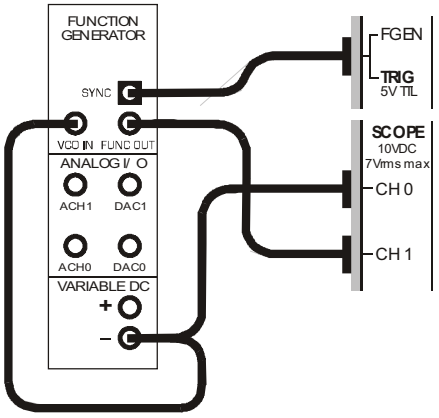

Figure 3

This set-up can be represented by the block diagram in Figure 4 on the next page. The negative output of the Variable DC Power Supplies is being used to provide a simple DC message and the VCO implements the FM modulator with a carrier frequency of 15kHz.

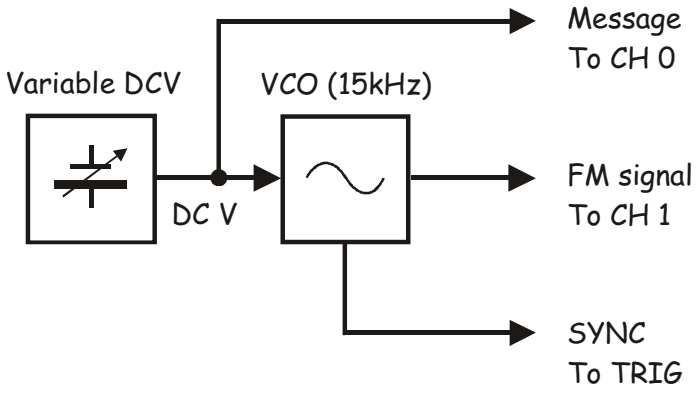

Figure 4

14. Launch and run the NI ELVIS II Oscilloscope VI.

15. Set up the scope per the procedure in Experiment 1 with the following changes:

    - *Scale* control for Channel 0 to *2V/div* instead of *1V/div*
    - *Trigger Type* control to *Digital* instead of *Edge*
    - *Coupling* controls for both channels to *DC* instead of *AC*

16. Activate the scope's Channel 1 input to view the FM signal on the VCO's output as well as the DC message signal.

17. Set the scope's *Timebase* control to view two or so cycles of the VCO output.

18. Vary the Variable Power Supplies negative output soft *Voltage* control and check that the VCO's output frequency changes accordingly.



Ask the instructor to check your work before continuing.

Part B – Setting up the zero-crossing detector

19. Launch the DATEx soft front-panel (SFP) and check that you have soft control over the DATEx board.

20. Locate the Twin Pulse Generator module on the DATEx SFP and turn its soft *Width* control fully anti-clockwise.

21. Set the Twin Pulse Generator module's soft *Delay* control fully anti-clockwise.

22. Locate the Tuneable Low-pass Filter module on the DATEx SFP and turn its soft *Gain* control fully clockwise.

23. Turn the Tuneable Low-pass Filter module's soft *Cut-off Frequency Adjust* control fully clockwise.

24. Modify the set-up as shown in Figure 5 below.

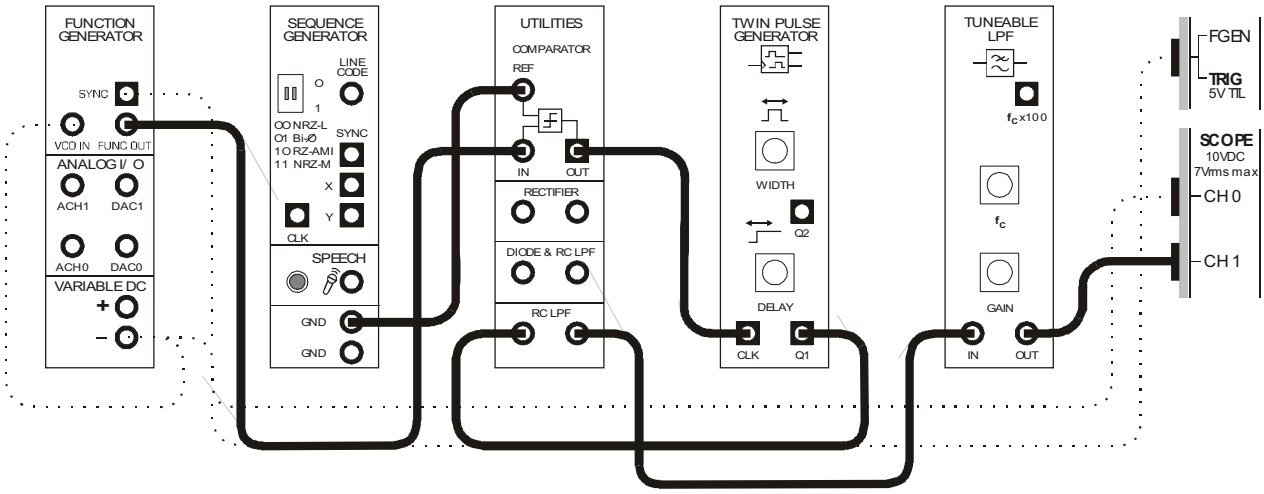

Figure 5

The additions to the set-up can be represented by the block diagram in Figure 6 on the next page. The comparator on the Utilities module is used to clip the FM signal, effectively turning it into a squarewave. The positive edge-triggered Twin Pulse Generator module is used to implement the zero-crossing detector. To complete the FM demodulator, the RC Low-pass Filter module and Tuneable Low-pass Filter module combination is used to pick-out the changing DC component of the Twin Pulse Generator module's output.

 © 2008 Emona Instruments

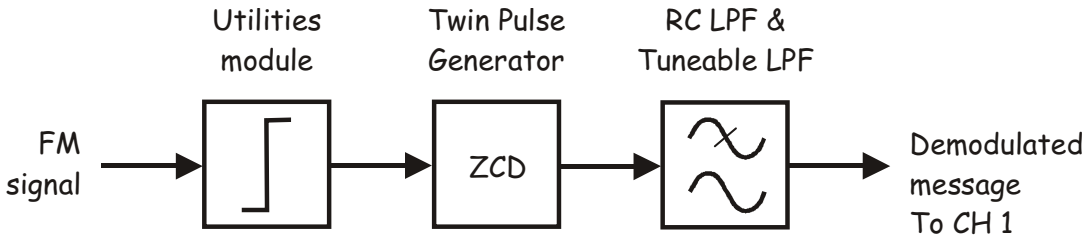

Figure 6

Note: The RC LPF and Tuneable LPF modules are used in combination because the Tuneable LPF is a clocked "switched capacitor" filter which uses internal sampling technology. These types of filters are subject to *aliasing* (a concept that is covered in later experiments) which can cause problems in sampled systems. To avoid such problems, we use the RC LPF as an *anti-aliasing* pre-filter for the Tuneable LPF. If time permits, explore this part of the experiment without the RC LPF.

The entire set-up can be represented by the block diagram in Figure 7 below.

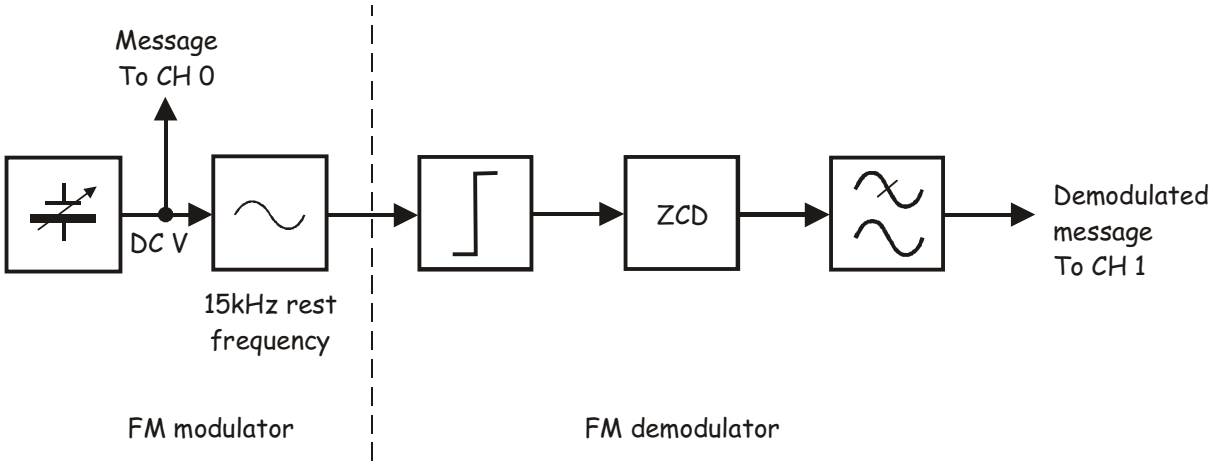

Figure 7

You will now tune the Tuneable Low-pass Filter to isolate the DC component of the ZCD for the voltage range of the input signal we plan to use.

25. Set the Variable Power Supplies negative output to -2V.

26. Set the scope's Channel 1 *Scale* control to the *100mv/div* position.

    Note: You should now see a 430mVp-p sinewave with a DC offset of approximately 230mV. This is the filtered pulse train out of the ZCD.

27. Slowly turn the Tuneable Low-pass Filter module's soft *Cut-off Frequency Adjust* control anti-clockwise until the sine wave becomes a DC voltage. Stop the moment this happens.

    Note 1: You have now eliminated all non-DC components from the signal. That said, the filter will still allow the message signal to pass.

    Note 2: Don't change the Tuneable Low-pass Filter module's soft *Cut-off Frequency Adjust* control setting for the rest of the experiment unless instructed to.

28. Vary the Variable Power Supplies negative output between 0V and a maximum of -2V.

    Note 1: As you do, you should notice that the DC voltage out of the Tuneable Low-pass Filter module varies as well.

    Note 2: If this doesn't happen, check that the scope's Channel 1 *Coupling* control is set to the DC position.



Ask the instructor to check your work before continuing.

 © 2008 Emona Instruments

Part C – Investigating the operation of the zero-crossing detector

The next part of the experiment lets you verify the operation of the zero-crossing detector.

29. Rearrange the scope's connections to the set-up as shown in Figure 8 below.

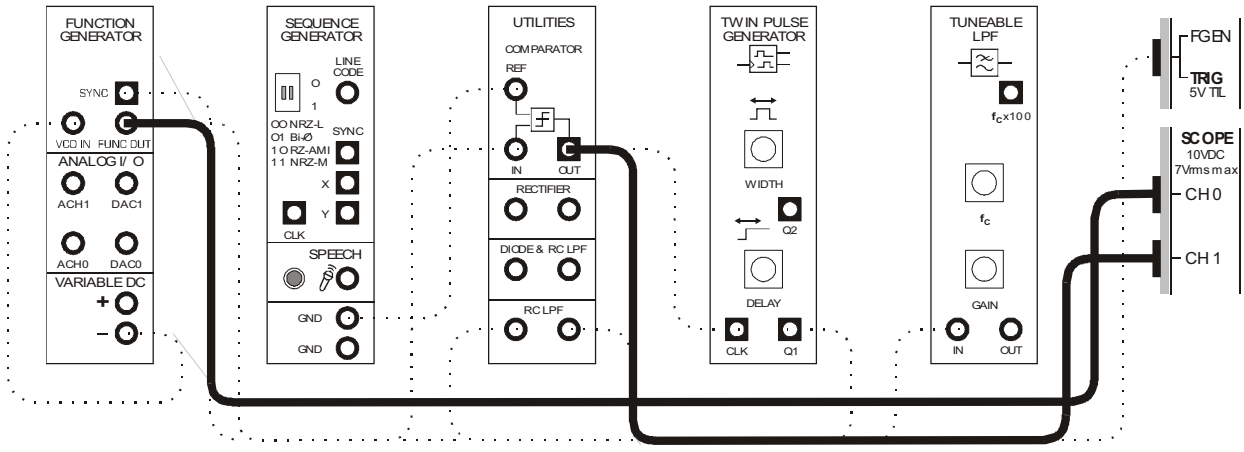

Figure 8

The new scope connections can be shown using the block diagram in Figure 9 below.

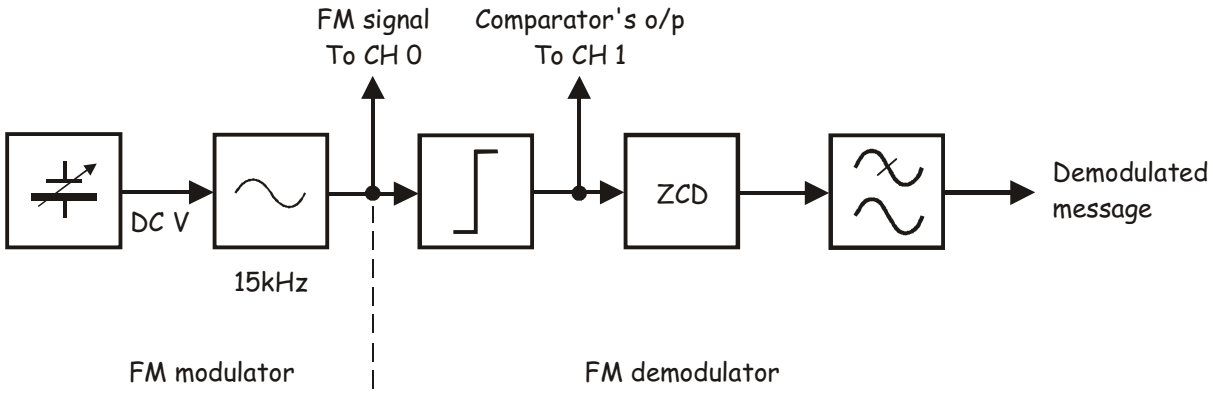

Figure 9

30. Vary the Variable Power Supplies negative output in small steps using the up and down arrow buttons on the VI.

    Note: This will cause small but noticeable changes in the FM signal's frequency.

31. As you vary the FM signal's frequency, pay close attention to the mark-space ratio (that is, the duty cycle) of the Comparator's output.

    Tip: You may find it helpful to adjust the scope's *Vertical Position* controls to separate the signals on the display.

Question 1
Does the mark-space ratio of the signal on the Comparator's output change?

Question 2
What does this tell us about the DC component of the comparator's output?



Ask the instructor to check your work before continuing.

 © 2008 Emona Instruments

32. Rearrange the scope's connections to the set-up as shown in Figure 10 below.

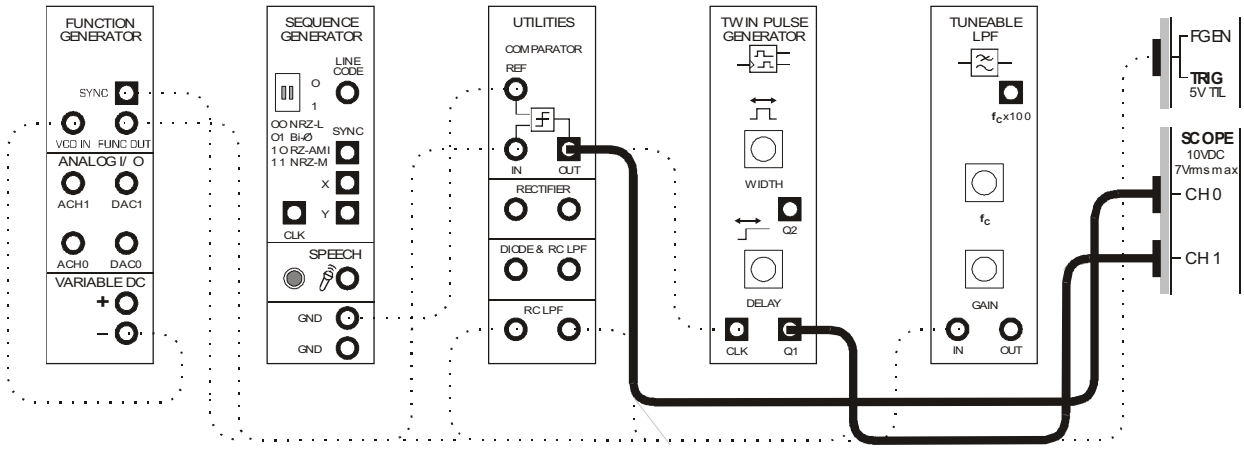

Figure 10

The new scope connections can be shown using the block diagram in Figure 11 below.

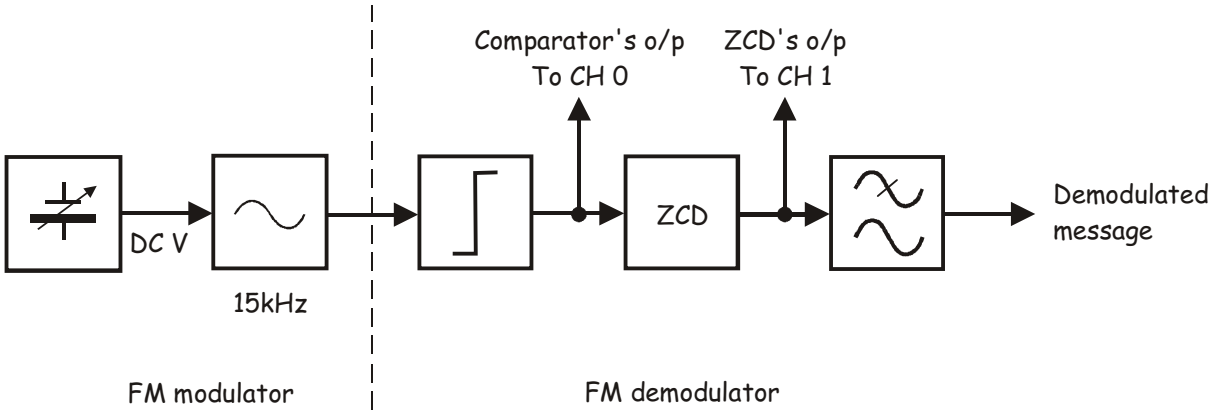

Figure 11

33. Vary the Variable Power Supplies negative output in small steps again to model an FM signal's changing frequency.

34. As you perform the step above, note how the frequency of the two signals changes.

35. Turn on the scope's cursors.

36. Use the scope's cursors to measure the width of the ZCD output's mark and space for different DC input voltages.

    Note: The time difference between the two cursors is displayed directly above the Channel 0 & 1 measurements and is denoted as *dT*.

    Tip: You may find it helpful to turn the scope's Channel 0 off as you do this and set its *Timebase* control to *10µs/div* when measuring the mark's width.

Question 3
As the FM signal changes frequency so does the ZCD's output. What aspect of the ZCD's output signal changes to achieve this?

- ☐ Neither the signal's mark nor space
- ☐ Only the signal's mark
- ☐ Only the signal's space
- ☐ Both the signal's mark and space

Question 4
What does this tell us about the DC component of the comparator's output?



Ask the instructor to check your work before continuing.

 © 2008 Emona Instruments

The next part of the experiment lets you verify your answer to the previous question.

37. If you deactivated the scope's Channel 0 then reactivate it and return its *Timebase* control to *50µs/div*.

38. Rearrange the scope's connections to the set-up as shown in Figure 12 below.

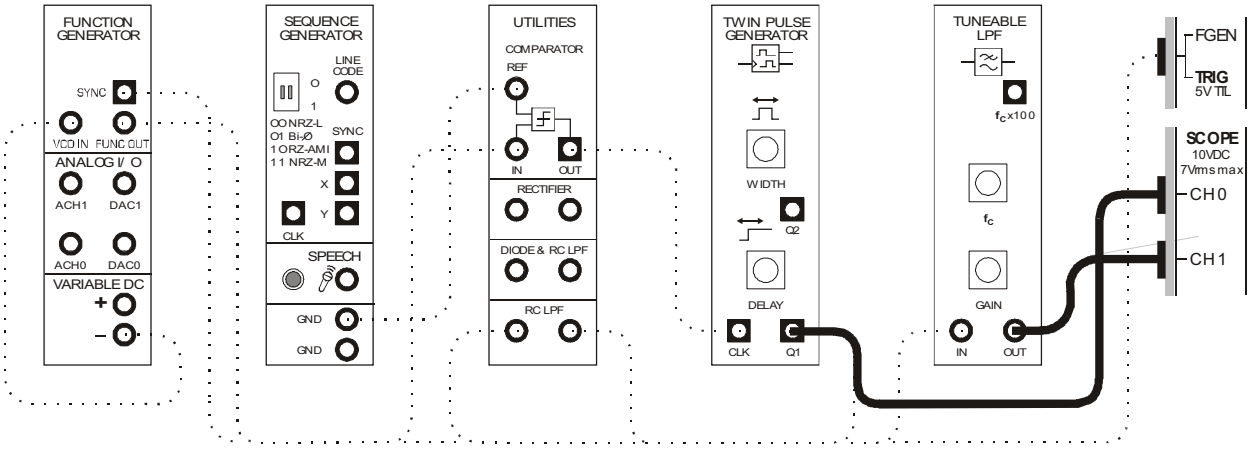

Figure 12

The new scope connections can be shown using the block diagram in Figure 13 below.

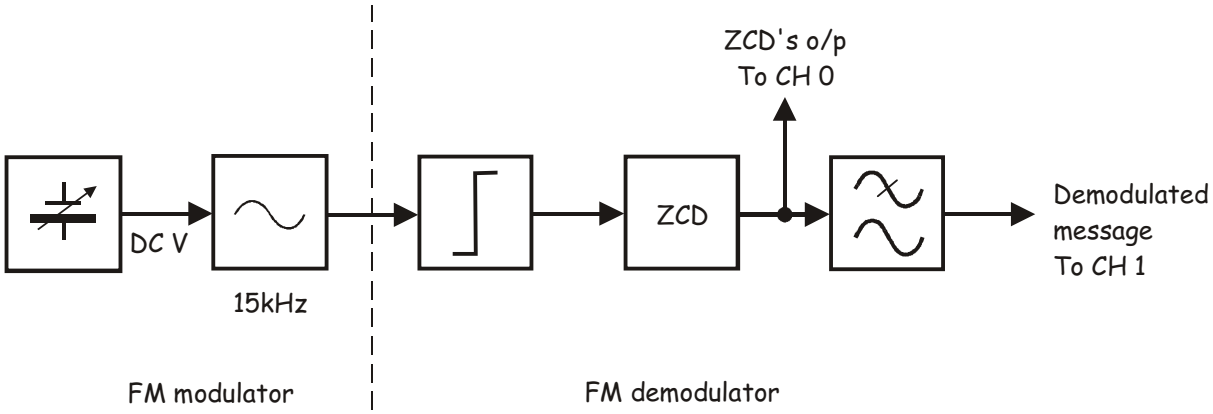

Figure 13

39. If you've adjusted the scope's Channel 1 *Vertical Position* control, re-zero it.

40. Vary the Variable Power Supplies negative output in small steps again to model an FM signal's changing frequency.

41. As you perform the step above, compare the outputs from the Twin Pulse Generator module (the ZCD) and the Tuneable Low-pass Filter module.

Question 5
Why does the Tuneable Low-pass Filter module's DC output go up as the mark-space ratio of the ZCD's output goes up?

Question 6
If the original message is a sinewave instead of a variable DC voltage, what would you expect to see out of the Tuneable Low-pass Filter module?



Ask the instructor to check your work before continuing.

© 2008 Emona Instruments

Part D – Transmitting and recovering a sinewave using FM

This experiment has set up an FM communication system to "transmit" a message that is a DC voltage. The next part of the experiment lets you use the set-up to modulate, transmit and demodulate a test signal (a sinewave).

42. If it's not already, turn the Tuneable Low-pass Filter module's soft *Gain* control fully clockwise.

43. Modify the set-up as shown in Figure 14 below.

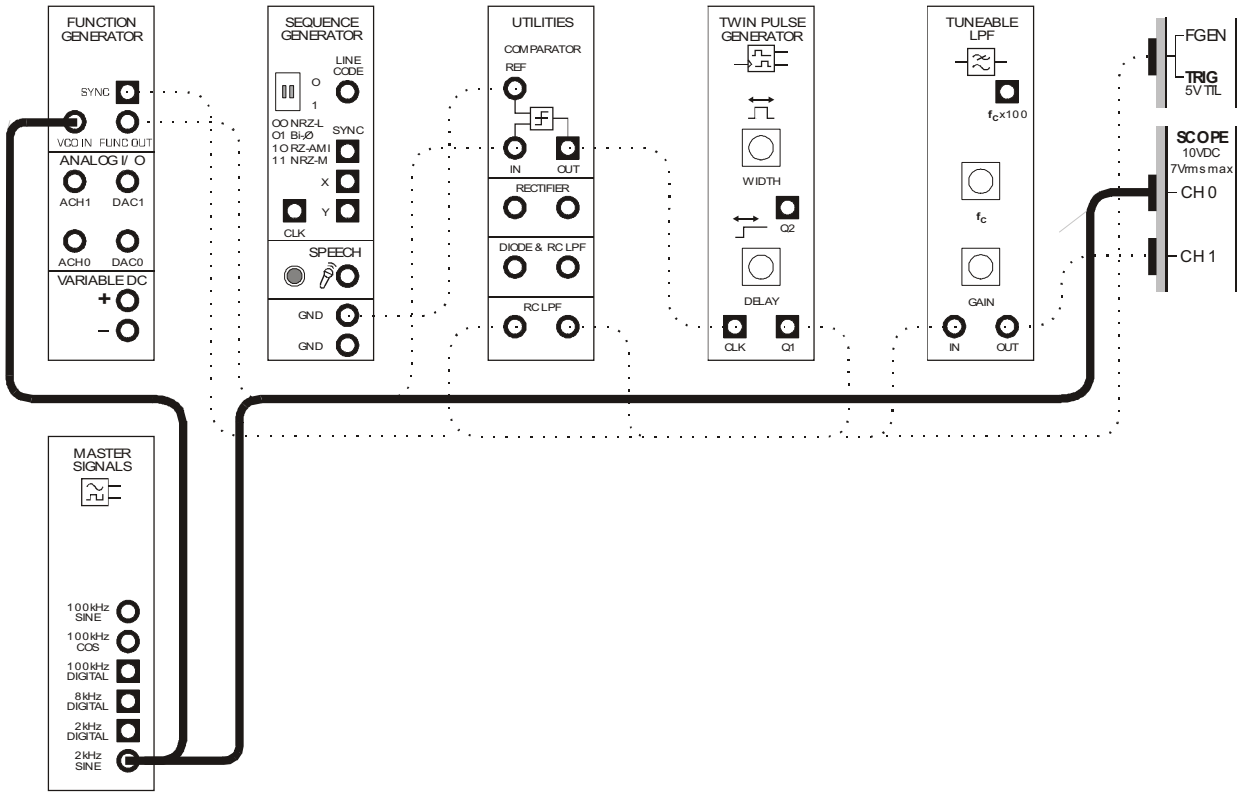

Figure 14

This modification to the FM modulator can be shown using the block diagram in Figure 15 on the next page. Notice that the message is now provided by the Master Signals module's *2kHz SINE* output.

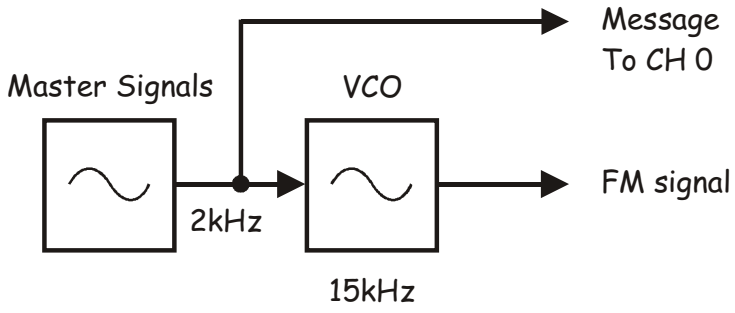

Figure 15

44. Make the following adjustments to the scope's controls:

- *Scale* control for Channel 0 to *2V/div* and to *100mV/div* for Channel 1
- *Input Coupling* control for both channels to *AC*
- *Trigger Type* to *Edge*
- *Trigger Source* to *CH 0*
- *Timebase* control to *200µs/div*

45. Use the *TAB* and arrow keys to turn the Tuneable Low-pass Filter module's soft *Cut-off Frequency Adjust* control slightly anti-clockwise to fine tune the filter's cut-off frequency.

Note: You will already be viewing the demodulated 2kHz message sinewave with an amplitude of approximately 250mVp-p.

Question 7
What does the FM modulator's output signal tell you about the ZCD signal's duty cycle?

Ask the instructor to check your work before continuing.

 © 2008 Emona Instruments

Part E – Transmitting and recovering speech using FM

The next part of the experiment lets you use the set-up to modulate, transmit and demodulate speech.

46. Disconnect the plugs to the Master Signals module's *2kHz SINE* output.

47. Modify the set-up as shown in Figure 16 below.

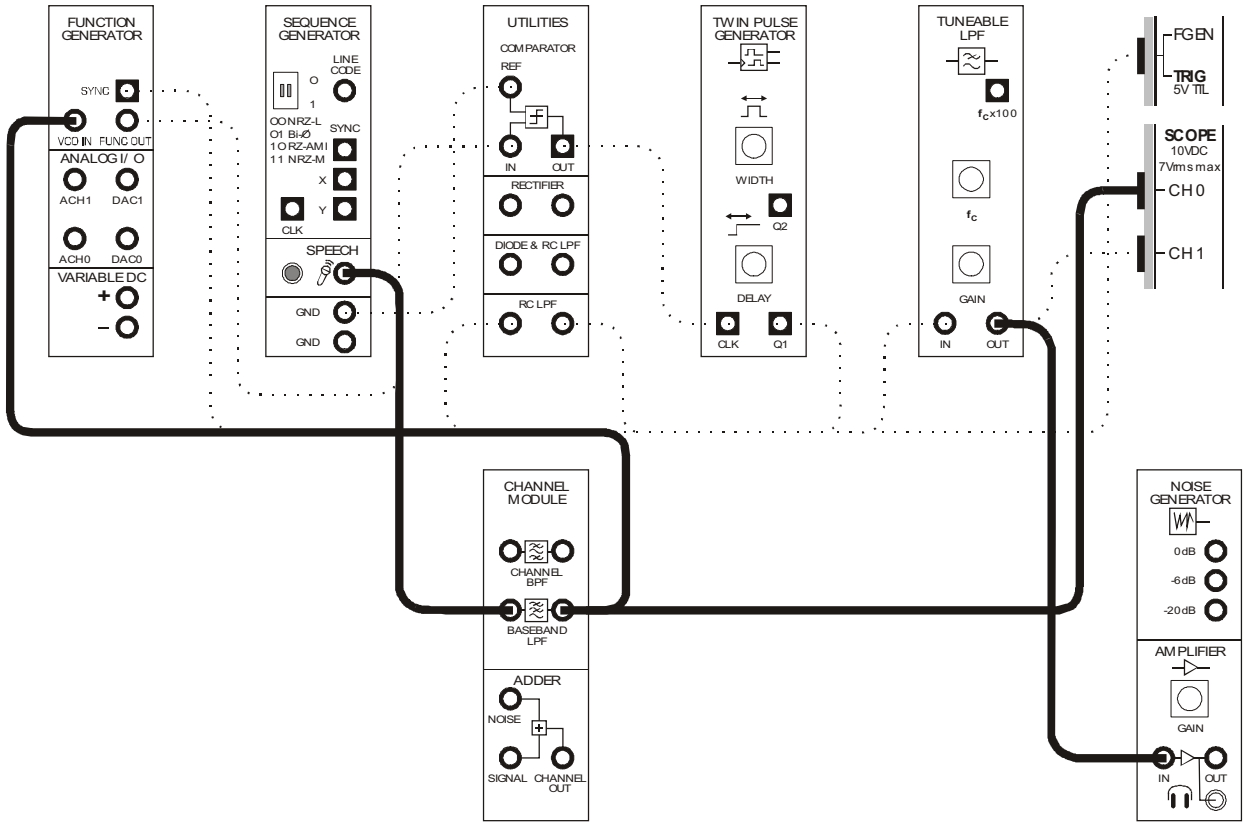

Figure 16

48. Set the scope's *Timebase* control to the *2ms/div* position.

49. Locate the Amplifier module on the DATEx SFP and turn its soft *Gain* control fully anti-clockwise.

50. Without wearing the headphones, plug them into the Amplifier module's headphone socket.

51. Put the headphones on.

52. As you perform the next step, set the Amplifier module's soft *Gain* control to a comfortable sound level.

53. Hum and talk into the microphone while watching the scope's display and listening on the headphones.

60. Once you have completed viewing the signal with the scope, stop the scope and start the NI ELVIS II Dynamic Signal Analyzer to view the spectrum of the frequency modulated speech. Set the DSA frequency setting to 40kHz. Try whistling into the microphone. This will help you to see the difference between single tones and speech during modulation.



Ask the instructor to check your work before finishing.

Name: _____

Class: _____

13 - Sampling and reconstruction

Experiment 13 – Sampling and reconstruction

Preliminary discussion

So far, the experiments in this manual have concentrated on communications systems that transmit analog signals. However, digital transmission is fast replacing analog in commercial communications applications. There are several reasons for this including the ability of digital signals and systems to resist interference caused by electrical noise.

Many digital transmission systems have been devised and several are considered in later experiments. Whichever one is used, where the information to be transmitted (called the *message*) is an analog signal (like speech and music), it must be converted to digital first. This involves *sampling* which requires that the analog signal's voltage be measured at regular intervals.

Figure 1a below shows a pure sinewave for the message. Beneath the message is the digital *sampling signal* used to tell the sampling circuit when to measure the message. Beneath that is the result of "naturally" sampling the message at the rate set by the sampling signal. This type of sampling is "natural" because, during the time that the analog signal is measured, any change in its voltage is measured too. For some digital systems, a changing sample is unacceptable. Figure 1b shows an alternative system where the sample's size is fixed at the instant that the signal measured. This is known as a *sample-and-hold* scheme (and is also referred to as *pulse amplitude modulation*).

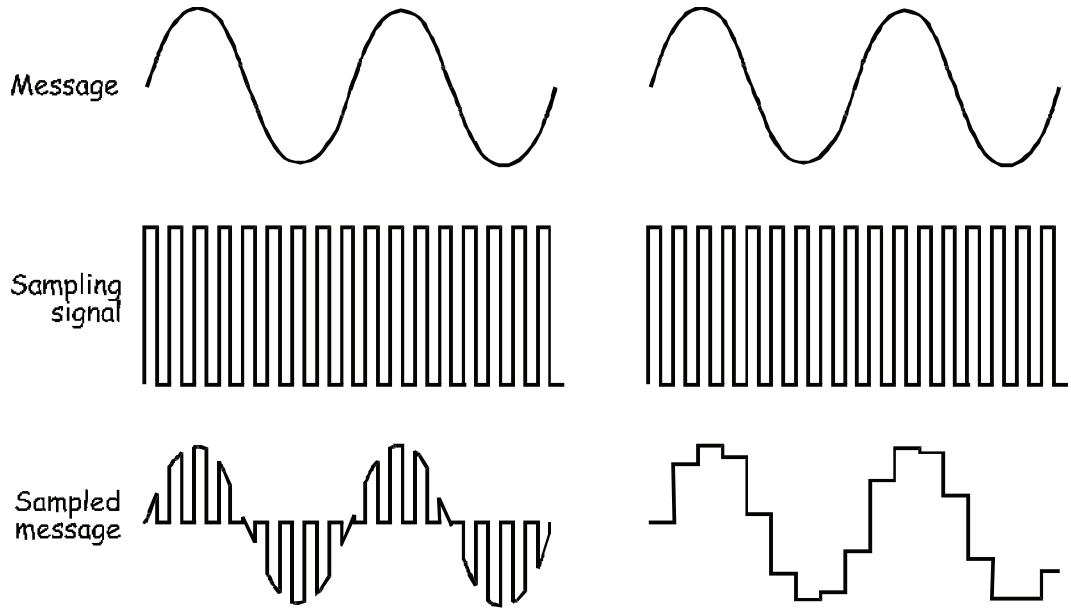

Figure 1a

Figure 1b

Regardless of the sampling method used, by definition it captures only pieces of the message. So, how can the sampled signal be used to recover the whole message? This question can be answered by considering the mathematical model that defines the sampled signal:

Sampled message = the sampling signal × the message

As you can see, sampling is actually the multiplication of the message with the sampling signal. And, as the sampling signal is a digital signal which is actually made up of a DC voltage and many sinewaves (the fundamental and its harmonics) the equation can be rewritten as:

Sampled message = (DC + fundamental + harmonics) × message

When the message is a simple sinewave (like in Figure 1) the equation's solution (which necessarily involves some trigonometry that is not shown here) tells us that the sampled signal consists of:

- A sinewave at the same frequency as the message
- A pair of sinewaves that are the sum and difference of the fundamental and message frequencies
- Many other pairs of sinewaves that are the sum and difference of the sampling signals' harmonics and the message

This ends up being a lot of sinewaves but one of them has the same frequency as the message. So, to recover the message, all that need be done is to pass the sampled signal through a low-pass filter. As its name implies, this type of filter lets lower frequency signals through but rejects higher frequency signals.

That said, for this to work correctly, there's a small catch which is discussed in Part E of the experiment.

The experiment

For this experiment you'll use the Emona DATEx to sample a message using natural sampling then a sample-and-hold scheme. You'll then examine the sampled message in the frequency domain using the NI ELVIS II Dynamic Signal Analyzer. Finally, you'll reconstruct the message from the sampled signal and examine the effect of a problem called *aliasing*.

It should take you about 50 minutes to complete this experiment.

Equipment

- Personal computer with appropriate software installed
- NI ELVIS II plus USB cable and power pack
- Emona DATEx experimental add-in module
- Two BNC to 2mm banana-plug leads
- Assorted 2mm banana-plug patch leads

Part A – Sampling a simple message

The Emona DATEx has a Dual Analog Switch module that has been designed for sampling. This part of the experiment lets you use the module to sample a simple message using two techniques.

Procedure

1. Ensure that the NI ELVIS II power switch at the back of the unit is off.

2. Carefully plug the Emona DATEx experimental add-in module into the NI ELVIS II.

3. Set the *Control Mode* switch on the DATEx module (top right corner) to *PC Control*.

4. Connect the NI ELVIS II to the PC using the USB cable.

   Note: This may already have been done for you.

5. Turn on the NI ELVIS II power switch at the rear of the unit then turn on its *Prototyping Board Power* switch at the top right corner near the power indicator.

6. Turn on the PC and let it boot-up.

7. Launch the NI ELVISmx software.



Ask the instructor to check your work before continuing.

© 2008 Emona Instruments

8. Connect the set-up shown in Figure 2 below.

Note: Insert the black plugs of the oscilloscope leads into a ground (*GND*) socket.

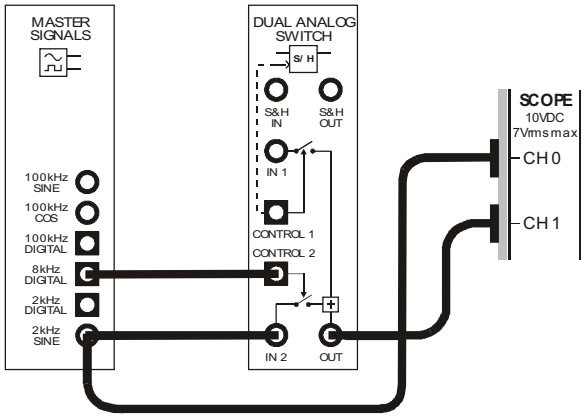

Figure 2

This set-up can be represented by the block diagram in Figure 3 below. It uses an electronically controlled switch to connect the message signal (the *2kHz SINE* output from the Master Signals module) to the output. The switch is opened and closed by the *8kHz DIGITAL* output of the Master Signals module.

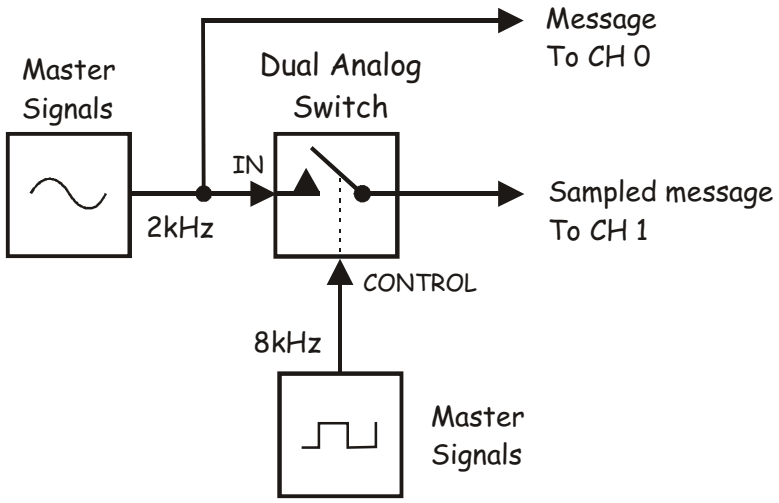

Figure 3

9. Launch and run the NI ELVIS II Oscilloscope VI.

10. Set up the scope per the procedure in Experiment 1 (page 1-12) with the following change:

    - *Timebase* control to the *100µs/div* position instead of *500µs/div*

11. Adjust the scope's *Timebase* control to view two or so cycles of the Master Signals module's *2kHz SINE* output.

12. Activate the scope's Channel 1 input by (by checking the Channel 1 *Enabled* box) to observe the sampled message out of the Dual Analog Switch module as well as the message.

    Tip: To see the two waveforms clearly, you may need to adjust the scope so that the two signals are not overlayed.

13. Draw the two waveforms to scale in the space provided on the next page leaving room to draw a third waveform.

    Tip: Draw the message signal in the upper third of the graph and the sampled signal in the middle third.

Question 1
What type of sampling is this an example of?

☐ Natural

☐ Sample-and-hold

Question 2
What two features of the sampled signal confirm this?

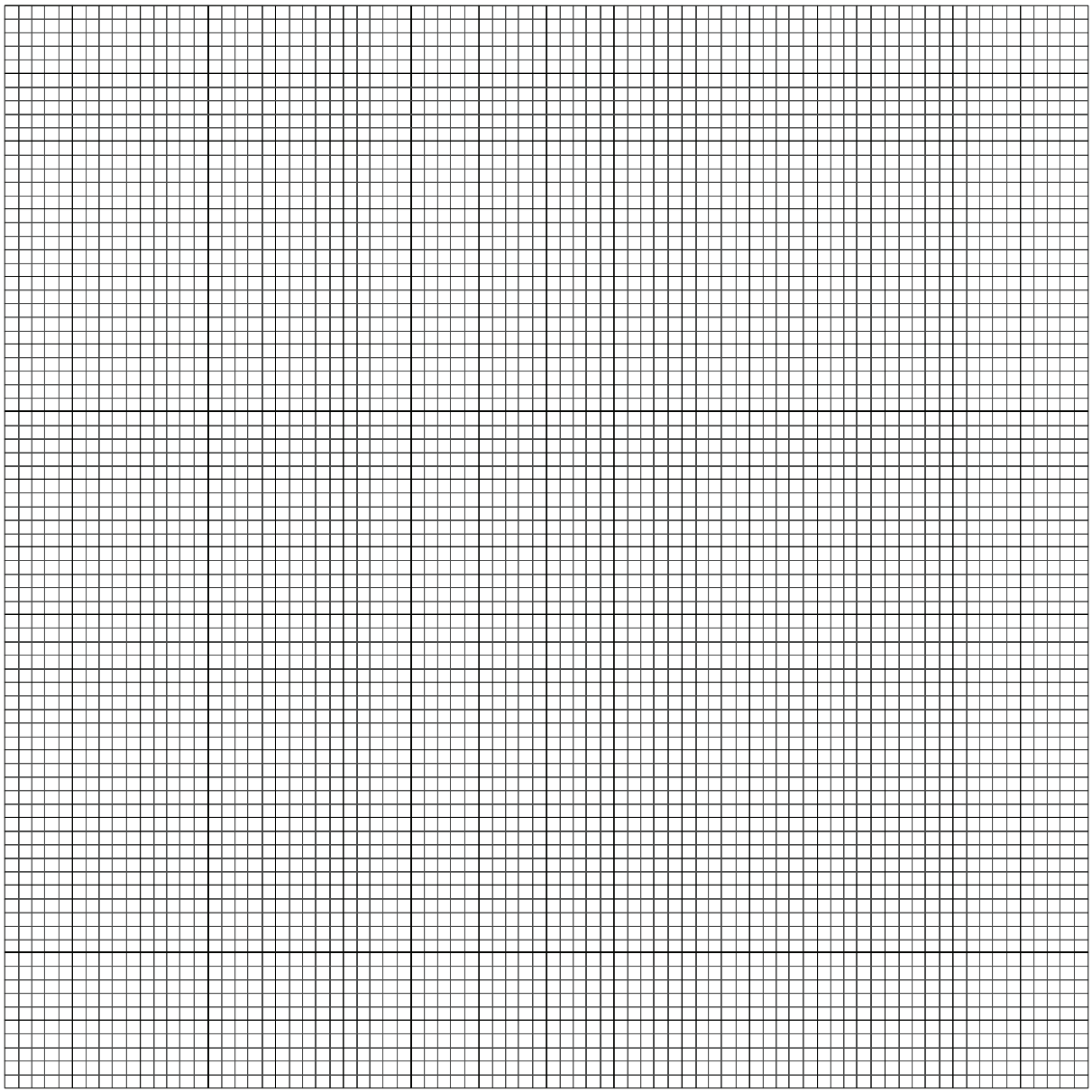



Ask the instructor to check
your work before continuing.

© 2008 Emona Instruments

14. Modify the set-up as shown in Figure 4 below.

Before you do…
The set-up in Figure 4 below builds on the set-up that you've already wired so don't pull it apart. To highlight the changes that we want you to make, we've shown your existing wiring as dotted lines.

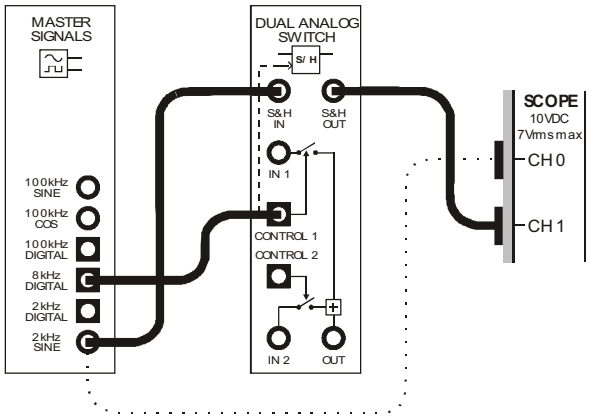

Figure 4

This set-up can be represented by the block diagram in Figure 5 on the next page. The electronically controlled switch in the original set-up has been substituted for a sample-and-hold circuit. However, the message and sampling signals remain the same (that is, a 2kHz sinewave and an 8kHz pulse train).

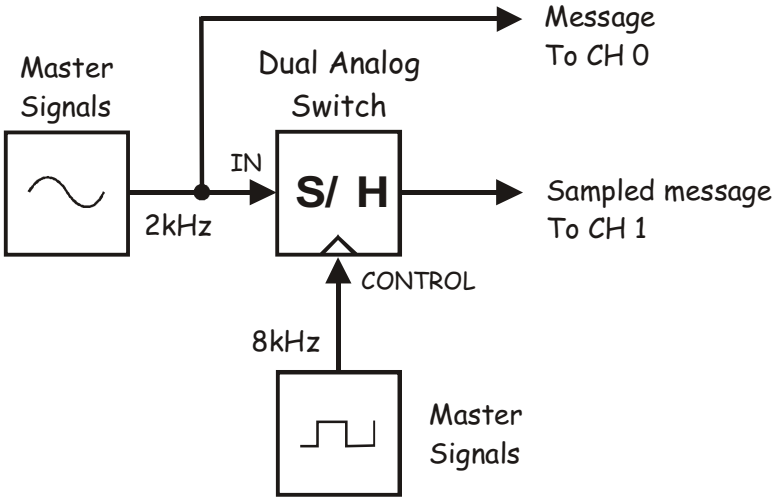

Figure 5

15. Draw the new sampled message to scale in the space that you left on the graph paper.

Question 3
What two features of the sampled signal confirm that the set-up models the sample-and-hold scheme?

Ask the instructor to check your work before continuing.

 © 2008 Emona Instruments

Part B – Sampling speech

This experiment has sampled a 2kHz sinewave. However, the message in commercial digital communications systems is much more likely to be speech and music. The next part of the experiment lets you see what a sampled speech signal looks like.

16. Disconnect the plugs to the Master Signals module's *2kHz SINE* output.

17. Connect them to the Speech module's output as shown in Figure 6 below.

    Remember: Dotted lines show leads already in place.

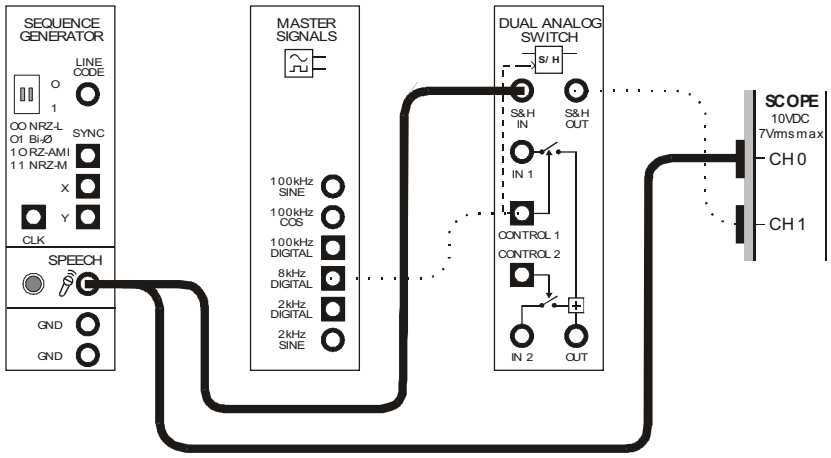

Figure 6

18. Set the scope's *Timebase* control to the *500µs/div* position.

19. Hum and talk into the microphone while watching the scope's display.



Ask the instructor to check your work before continuing.

Part C – Observations and measurements of the sampled message in the frequency domain

Recall that the sampled message is made up of many sinewaves. Importantly, for every sinewave in the original message, there's a sinewave in the sampled message at the same frequency. This can be proven using the NI ELVIS II Dynamic Signal Analyzer. This device performs a mathematical analysis called *Fast Fourier Transform* (FFT) that allows the individual sinewaves that make up a complex waveform to be shown separately on a *frequency-domain* graph. The next part of the experiment lets you observe the sampled message in the frequency domain.

20. Return the scope's *Timebase* control to the *100µs/div* position.

21. Disconnect the plugs to the Speech module's output and reconnect them to the Master Signals module's *2kHz SINE* output.

    Note: The scope should now display the waveform that you drew for Step 15.

22. Suspend the scope VI's operation by clicking on its *Stop* control once.

    Note: The scope's display should freeze and its hardware has been deactivated. This is a necessary step as the scope and signal analyzer share hardware resources and so they cannot be operated simultaneously.

23. Launch the NI ELVIS II Dynamic Signal Analyzer VI.

    Note: If the signal analyzer's VI has launched successfully, the instrument's window will be visible (see Figure 7).

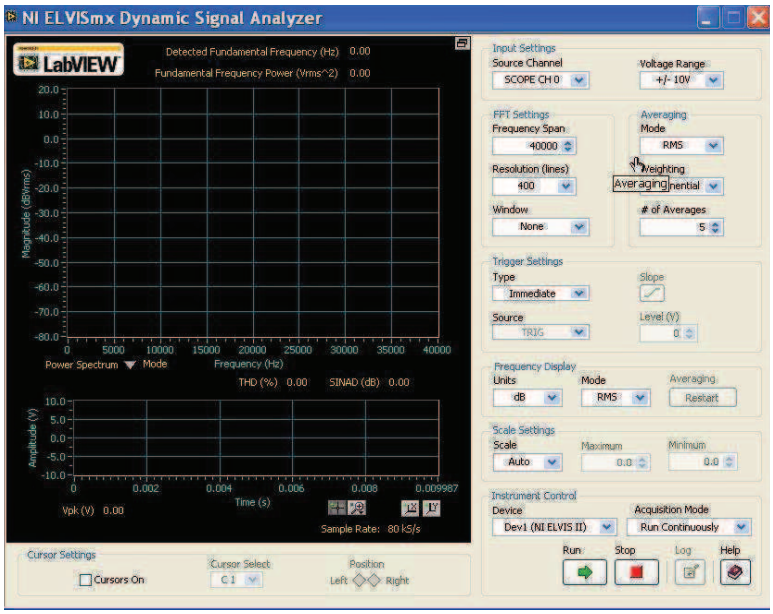

Figure 7

24. Adjust the Signal Analyzer's controls as follows:

Input Settings

- *Source Channel* to *SCOPE CH 1*
- Voltage Range to ±10V

FFT Settings

- *Frequency Span* to *40,000*
- *Resolution* to *400*
- *Window* to *7 Term B-Harris*

Averaging

- *Mode* to *RMS*
- *Weighting* to *Exponential*
- *# of Averages* to *3*

Trigger Settings

- *Type* to *Edge*

Frequency Display

- *Units* to *dB* (for now)
- *Mode* to *RMS*
- *Scale* to *Auto*
- *Cursors On* box unchecked (for now)

25. Click on the signal analyzer's *Run* control.

Note: If the Signal Analyzer VI has been set up correctly, its display should look like Figure 8 below.

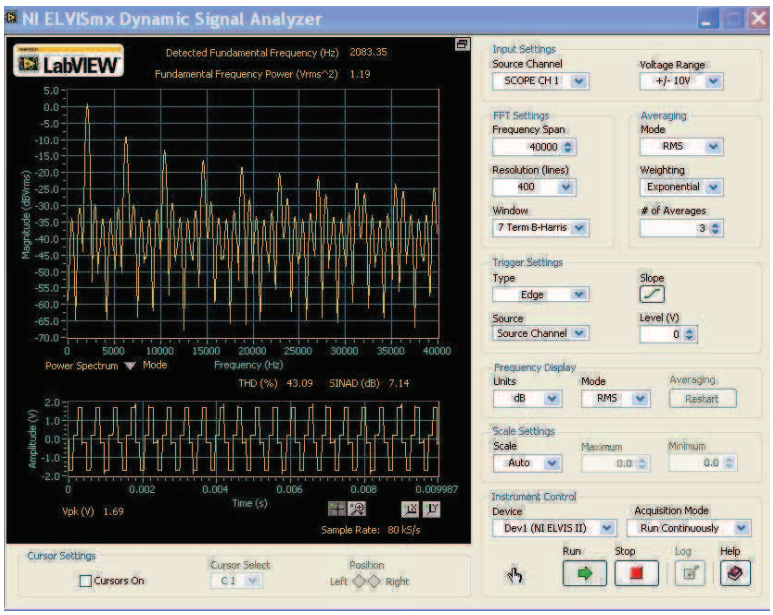

Figure 8

If you've not attempted Experiment 7, the signal analyzer's display may need a little explaining here. There are actually two displays, a large one on top and a much smaller one underneath. The smaller one is a time domain representation of the input (in other words, the display is a scope).

The larger of the two displays is the frequency domain representation of the complex waveform on its input (the sampled message). The humps represent the sinewaves and, as you can see, the sampled message consists of many of them. As an aside, these humps should just be simple straight lines, however, the practical implementation of FFT is not as precise as the theoretical expectation.

If you have done Experiment 7, go directly to Step 33 on the next page.

26. Activate the signal analyzer's cursors by checking (that is, ticking) *Cursors On* box.

    Note: When you do, green horizontal and vertical lines should appear on the signal analyzer's frequency domain display.

The NI ELVIS II Dynamic Signal Analyzer has two cursors *C1* and *C2* that default to the left most side of the display when the signal analyzer's VI is launched. They're repositioned by "grabbing" their vertical lines with the mouse and moving the mouse left or right.

27. Use the mouse to grab and move the vertical line of cursor *C1*.

    Note: As you do, notice that cursor *C1* moves along the signal analyzer's trace and that the vertical and horizontal lines move so that they always intersect at *C1*.

28. Repeat Step 27 for cursor *C2*.

    Note: Fine control over the cursors' position is obtained by using the cursor's *Position* control in the *Cursor Settings area (below the display*).

The NI ELVIS II Dynamic Signal Analyzer includes a tool that measures the ***difference*** in magnitude and frequency between the two cursors. This information is displayed in green between the upper and lower parts of the display.

29. Move the cursors while watching the measurement readout to observe the effect.

30. Position the cursors so that they're on top of each other and note the measurement.

    Note: When you do, the measurement of difference in magnitude and frequency should both be zero.

Usefully, when one of the cursors is moved to the extreme left of the display, its position on the X-axis is zero. This means that the cursor is sitting on 0Hz. It also means that the measurement readout gives an absolute value of frequency for the other cursor. This makes sense when you think about it because the readout gives the difference in frequency between the two cursors but one of them is zero.

31. Move *C2* to the extreme left of the display.

32. Align *C1* with the highest point of any one of the humps.

    Note: The readout will now be showing you the frequency of the sinewave that the hump represents.

Recall that the message signal being sampled is a 2kHz sinewave. This means that there should also be a 2kHz sinewave in the sampled message.

33. Use the signal analyzer's *C1* cursor to locate sinewave in the sampled message that has the same the frequency as the original message.



Ask the instructor to check your work before continuing.

As discussed earlier, the frequency of all of the sinewaves in the sampled message can be mathematically predicted. Recall that digital signals like the sampling circuit's clock signal are made up out of a DC voltage and many sinewaves (the fundamental and harmonics). As this is a sample-and-hold sampling scheme, the digital signal functions as a series of pulses rather than a squarewave. This means that the sampled signal's spectral composition consists of a DC voltage, a fundamental and both even and odd whole number multiples of the fundamental. For example, the 8kHz sampling rate of your set-up consists of a DC voltage, an 8kHz sinewave (fs), a 16kHz sinewave (2fs), a 24kHz sinewave (3fs) and so on.

The multiplication of the sampling signal's DC component with the sinewave message gives a sinewave at the same frequency as the message and you have just located this in the sampled signal's spectrum.

The multiplication of the sampling signal's fundamental with the sinewave message gives a pair of sinewaves equal to the fundamental frequency plus and minus the message frequency. That is, it gives a 6kHz sinewave (8kHz – 2kHz) and a 10kHz sinewave (8kHz + 2kHz).

In addition to this, the multiplication of the sampling signal's harmonics with the sinewave message gives pairs of sinewaves equal to the harmonics' frequency plus and minus the message frequency. That is, the signal also consists of sinewaves at the following frequencies: 14kHz (16kHz – 2kHz), 18kHz (16kHz + 2kHz), 22kHz (24kHz – 2kHz), 26kHz (24kHz + 2kHz) and so on.

All of these sum and difference sinewaves in the sampled signal are appropriately known as *aliases*.

34. Use the signal analyzer's *C1* cursor to locate and measure the exact frequency of the sampled signal's first six aliases. Record your measurements in Table 1 below.

    Tip: Their frequencies will be close to those listed above.

Table 1

Alias 1		**Alias 4**	
Alias 2		**Alias 5**	
Alias 3		**Alias 6**	



Ask the instructor to check your work before continuing.

Why aren't the alias frequencies exactly as predicted?
You will have notice that the measured frequencies of your aliases don't exactly match the theoretically predicted values. This is not a flaw in the theory. To explain, the Emona DATEx has been designed so that the signals out of the Master Signals module are synchronised. This is a necessary condition for the implementation of many of the modulation schemes in this manual. To achieve this synchronisation, the 8kHz and 2kHz signals are derived from a 100kHz master crystal oscillator. As a consequence, their frequencies are actually 8.3kHz and 2.08kHz.

 © 2008 Emona Instruments

Part D – Reconstructing a sampled message

Now that you have proven that the sampled message consists of a sinewave at the original message frequency, it's easy to understand how a low-pass filter can be used to "reconstruct" the original message. The LPF can pick-out the sinewave at the original message frequency and reject the other higher frequency sinewaves. The next part of the experiment lets you do this.

35. Suspend the Signal Analyzer VI's operation by clicking on its *Stop* control once.

    Note: The analyzer's display should freeze.

36. Restart the scope's VI by clicking its *Run* control once.

37. Launch the DATEx soft front-panel (SFP).

38. Check you now have soft control over the DATEx by activating the PCM Encoder module's **soft** *PDM/TDM* control on the DATEx SFP.

    Note: If you're set-up is working correctly, the PCM Decoder module's LED on the DATEx board should turn on and off.

39. Locate the Tuneable Low-pass Filter module on the DATEx SFP and set its soft *Gain* control to about the middle of its travel.

40. Turn the Tuneable Low-pass Filter module's soft *Cut-off Frequency Adjust* control fully anti-clockwise.

41. Modify the set-up as shown in Figure 9 below.

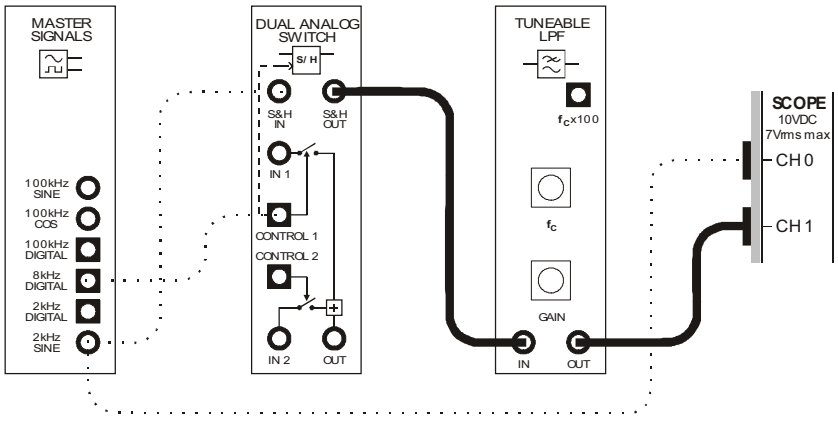

Figure 9

The set-up in Figure 9 can be represented by the block diagram in Figure 10 below. The Tuneable Low-pass Filter module is used to recover the message. The filter is said to be "tuneable" because the point at which frequencies are rejected (called the *cut-off frequency*) is adjustable.

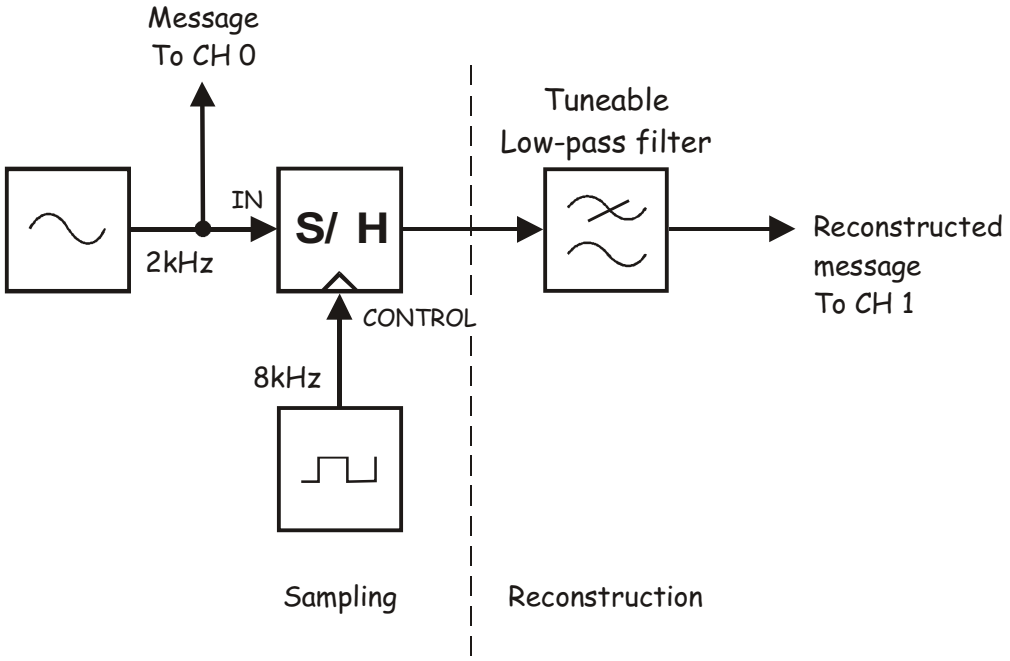

Figure 10

At this point there should be nothing out of the Tuneable Low-pass Filter module. This is because it has been set to reject almost all frequencies, even the message. However, the cut-off frequency can be increased by turning the module's *Cut-off Frequency Adjust* control clockwise.

42. Slowly turn the Tuneable Low-pass Filter module's soft *Cut-off Frequency* control clockwise and stop when the message signal has been reconstructed and is roughly in phase with the original message.



Ask the instructor to check your work before continuing.

 © 2008 Emona Instruments

Part E – Aliasing

At present, the filter is only letting the message signal through to the output. It is comfortably rejecting all of the other sinewaves that make up the sampled message (the aliases). This is only possible because the frequency of these other sinewaves is high enough. Recall from your earlier measurements that the lowest frequency alias is 6kHz.

Recall also that the frequency of the aliases is set by the sampling signal's frequency (for a given message). So, suppose the frequency of the sampling signal is lowered. A copy of the message would still be produced because that's a function of the sampling signal's DC component. However, the frequency of the aliases would all go down. Importantly, if the sampling signal's frequency is low enough, one or more of the aliases pass through the filter along with the message. Obviously, this would distort the reconstructed message which is a problem known as *aliasing*.

To avoid aliasing, the sampling signal's theoretical minimum frequency is twice the message frequency (or twice the highest frequency in the message if it contains more than one sinewave and is a baseband signal). This figure is known as the *Nyquist Sample Rate* and helps to ensure that the frequency of the non-message sinewaves in the sampled signal is higher than the message's frequency. That said, filters aren't perfect. Their rejection of frequencies beyond the cut-off is gradual rather than instantaneous. So in practice the sampling signal's frequency needs to be a little higher than the Nyquist Sample Rate.

The next part of the experiment lets you vary the sampling signal's frequency to observe aliasing.

43. Launch and run the NI ELVIS II Function Generator VI.

44. Adjust the function generator for an 8kHz output.

    Note: It's not necessary to adjust any other controls as the function generator's *SYNC* output will be used and this is a digital signal.

45. Modify the set-up as shown in Figure 11 below.

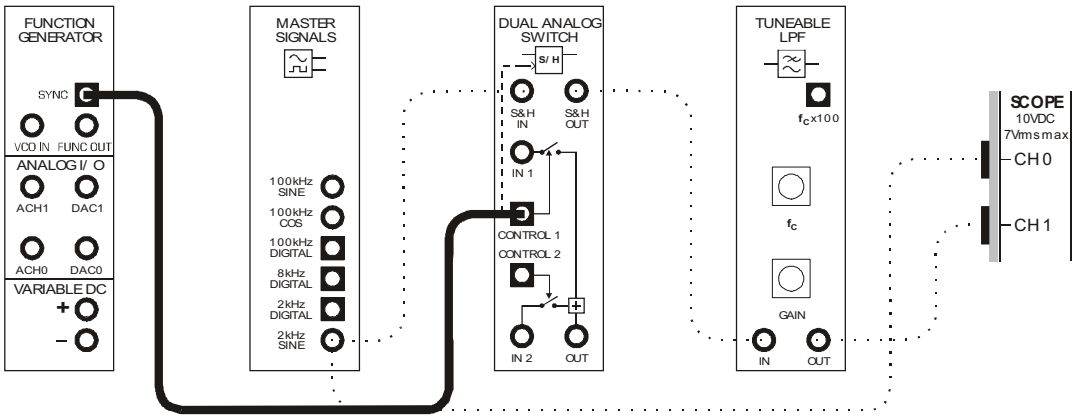

Figure 11

This set-up can be represented by the block diagram in Figure 12 below. Notice that the sampling signal is now provided by the function generator which has an adjustable frequency.

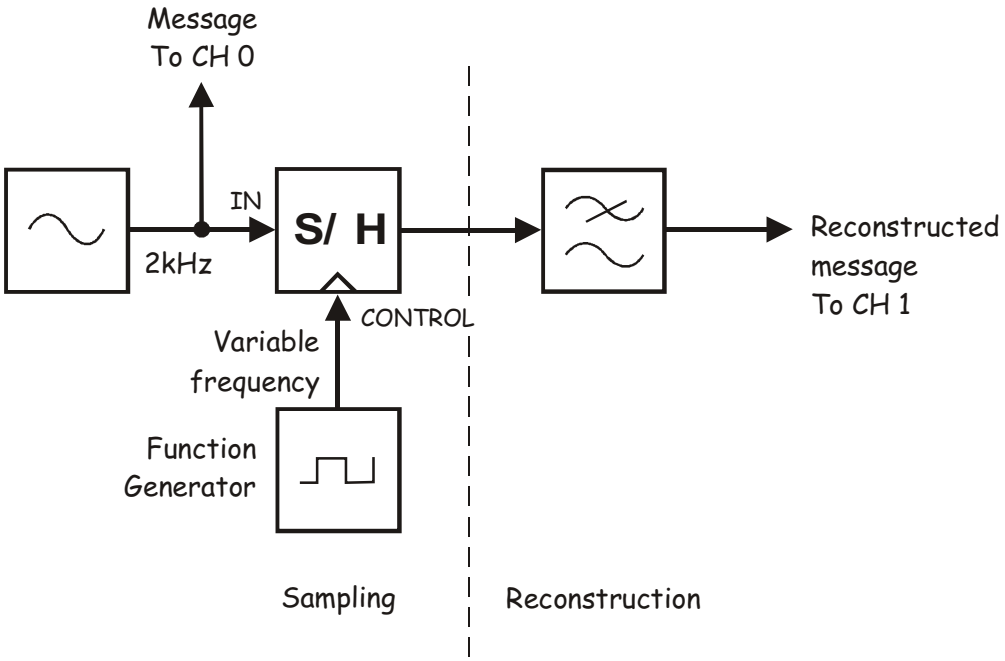

Figure 12

At this point, the sampling of the message and its reconstruction should be working as before.

46. Set the scope's *Timebase* control to the *500µs/div* position.

47. Reduce the frequency of the frequency generator's output by 1000Hz and observe the effect this has (if any) on the reconstructed message signal.

    Note: Give the function generator time to output the new frequency before you change it again.

48. Disconnect the scope's Channel 1 input from the Tuneable Low-pass Filter module's output and connect it to the Dual Analog Switch module's *S&H* output.

49. Suspend the scope VI's operation.

50. Restart the signal analyzer's VI.

Question 4
What has happened to the sampled signal's aliases?

---

51. Suspend the signal analyzer VI's operation.

52. Restart the scope's VI.

53. Return the scope's Channel 1 input to the Tuneable Low-pass Filter module's output.

54. Repeat Steps 47 to 53 until the function generator's output frequency is 3000Hz.

Question 5
What's the name of the distortion that appears when the sampling frequency is low enough?

Question 6
What happens to the sampled signal's lowest frequency alias when the sampling rate is 4kHz?



Ask the instructor to check your work before continuing.

55. If you've not done so already, repeat Steps 51 to 53.

56. Increase the frequency of the frequency generator's output in 200Hz steps and stop the when the recovered message is a stable, clean copy of the original.

57. Record this frequency in Table 2 below.

Table 2	Frequency
Minimum sampling frequency (without aliasing)	

Question 7
Given the message is a 2kHz sinewave, what's the theoretical minimum frequency for the sampling signal? **Tip:** If you're not sure, see the notes on page 13-18.

Question 8
Why is the actual minimum sampling frequency to obtain a reconstructed message without aliasing distortion higher than the theoretical minimum that you calculated for Question 5?



Ask the instructor to check your work before finishing.

© 2008 Emona Instruments

Name: _____

Class: _____

14 - PCM encoding

Experiment 14 – PCM encoding

Preliminary discussion

As you know, digital transmission systems are steadily replacing analog systems in commercial communications applications. This is especially true in telecommunications. That being the case, an understanding of digital transmission systems is crucial for technical people in the communications and telecommunications industries. The remaining experiments in this book use the Emona DATEx to introduce you to several of these systems starting with *pulse code modulation* (PCM).

PCM is a system for converting analog message signals to a serial stream of 0s and 1s. The conversion process is called *encoding*. At its simplest, encoding involves:

- Sampling the analog signal's voltage at regular intervals using a sample-and-hold scheme (demonstrated in Experiment 13).
- Comparing each sample to a set of reference voltages called *quantisation levels*.
- Deciding which quantisation level the sampled voltage is closest to.
- Generating the binary number for that quantisation level.
- Outputting the binary number one bit at a time (that is, in serial form).
- Taking the next sample and repeating the process.

An issue that is crucial to the performance of the PCM system is the encoder's clock frequency. The clock tells the PCM encoder when to sample and, as the previous experiment shows, this must be at least twice the message frequency to avoid aliasing (or, if the message contains more than one sinewave, at least twice its highest frequency).

Another important PCM performance issue relates to the difference between the sample voltage and the quantisation levels that it is compared to. To explain, most sampled voltages will not be the same as any of the quantisation levels. As mentioned above, the PCM Encoder assigns to the sample the quantisation level that is closest to it. However, in the process, the original sample's value is lost and the difference is known as *quantisation error*. Importantly, the error is reproduced when the PCM data is decoded by the receiver because there is no way for the receiver to know what the original sample voltage was. The size of the error is affected by the number of quantisation levels. The more quantisation levels there are (for a given range of sample voltages) the closer they are together. This means that the difference between the quantisation levels and the samples is smaller and so the error is lower.

A little information about the PCM Encoder module on the Emona DATEx

The PCM Encoder module uses a PCM encoding and decoding chip (called a *codec*) to convert analog voltages between -2V and +2V to an 8-bit binary number. With eight bits, it's possible to produce 256 different numbers between 00000000 and 11111111 inclusive. This in turn means that there are 256 quantisation levels (one for each number).

Each binary number is transmitted in serial form in *frames*. The number's most significant bit (called bit-7) is sent first, bit-6 is sent next and so on to the least significant bit (bit-0). The PCM Encoder module also outputs a separate *Frame Synchronisation* signal (*FS*) that goes high at the same time that bit-0 is outputted. The *FS* signal has been included to help with PCM decoding (discussed in the preliminary discussion of Experiment 15) but it can also be used to help "trigger" a scope when looking at the signals that the PCM Encoder module generates.

Figure 1 below shows an example of three frames of a PCM Encoder module's output data (each bit is shown as both a 0 and a 1 because it could be either) together with its clock input and its *FS* output.

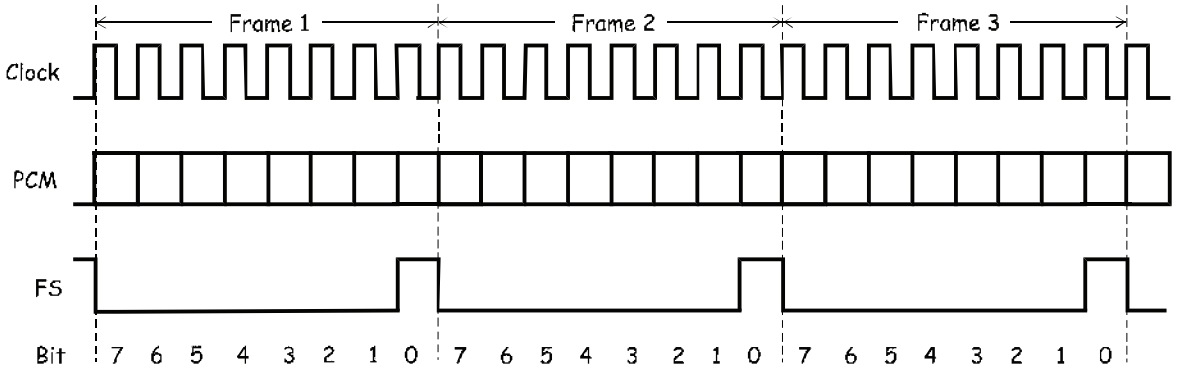

Figure 1

The experiment

For this experiment you'll use the PCM Encoder module on the Emona DATEx to convert the following to PCM: a fixed DC voltage, a variable DC voltage and a continuously changing signal. In the process, you'll verify the operation of PCM encoding and investigate quantisation error a little.

It should take you about 1 hour to complete this experiment.

 © 2008 Emona Instruments

Equipment

- Personal computer with appropriate software installed
- NI ELVIS II plus USB cable and power pack
- Emona DATEx experimental add-in module
- Two BNC to 2mm banana-plug leads
- Assorted 2mm banana-plug patch leads

Procedure

Part A – An introduction to PCM encoding using a static DC voltage

1. Ensure that the NI ELVIS II power switch at the back of the unit is off.

2. Carefully plug the Emona DATEx experimental add-in module into the NI ELVIS II.

3. Set the *Control Mode* switch on the DATEx module (top right corner) to *PC Control*.

4. Connect the NI ELVIS II to the PC using the USB cable.

   Note: This may already have been done for you.

5. Turn on the NI ELVIS II power switch at the rear of the unit then turn on its *Prototyping Board Power* switch at the top right corner near the power indicator.

6. Turn on the PC and let it boot-up.

7. Launch the NI ELVISmx software.

8. Launch and run the NI ELVIS II Function Generator VI.

9. Adjust the function generator for a 10kHz output.

   Note: It's not necessary to adjust any other controls as the function generator's *SYNC* output will be used and this is a digital signal.

10. Connect the set-up shown in Figure 2 below.

Note: Insert the black plugs of the oscilloscope leads into a ground (*GND*) socket.

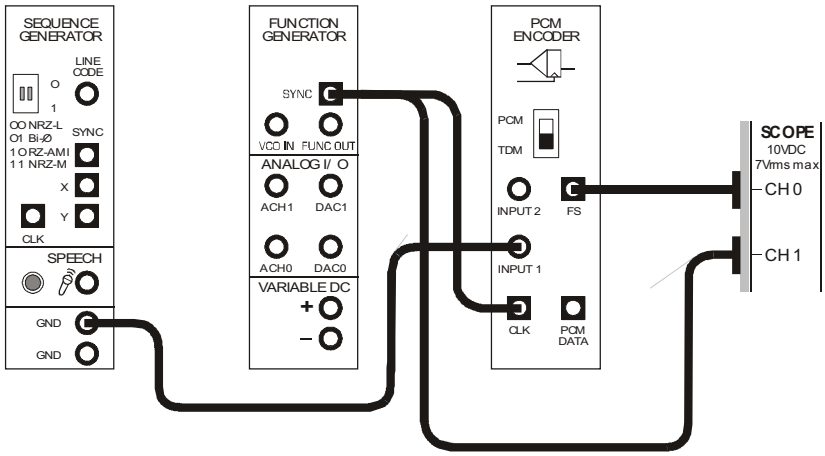

Figure 2

This set-up can be represented by the block diagram in Figure 3 below. The PCM Encoder module is clocked by the function generator output. Its analog input is connected to 0V DC.

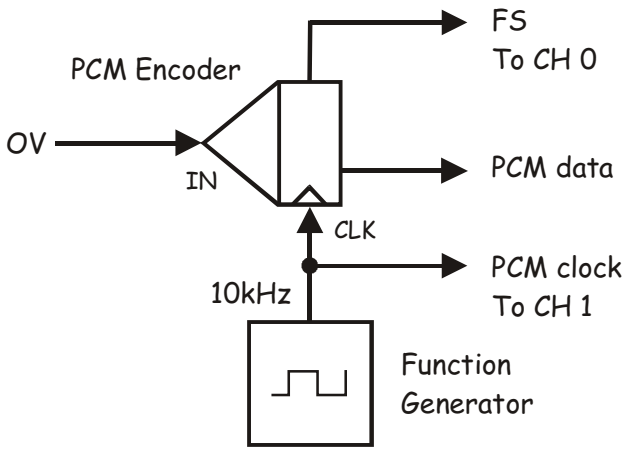

Figure 3

11. Launch the DATEx soft front-panel (SFP).

12. Check you now have soft control over the DATEx by activating the PCM Encoder module's **soft** *PDM/TDM* control on the DATEx SFP.

    Note: If you're set-up is working correctly, the PCM Decoder module's LED on the DATEx board should turn on and off.

13. Locate the PCM Encoder module on the Emona DATEx SFP and set its soft *Mode* switch to the *PCM* position.

14. Launch and run the NI ELVIS II Oscilloscope VI.

15. Set up the scope per the procedure in Experiment 1 (page 1-12) with the following changes:

    - *Scale* control for both channels to *2V/div* instead of *1V/div*
    - *Coupling* control for both channels to *DC* instead of *AC*
    - *Trigger Level* control to *2V* instead of *0V*
    - *Timebase* control to *200µs/div* instead of *500µs/div*

16. Set the scope's *Slope* control to the  position.

Setting the *Slope* control to the "-" position makes the scope start its sweep across the screen when the *FS* signal goes from high to low instead of low to high. You can really notice the difference between the two settings if you flip the scope's *Slope* control back and forth. If you do this, make sure that the *Slope* control finishes on the "-" position.

17. Set the scope's *Timebase* control to the *100µs/div* position.

    Note 1: The *FS* signal's pulse should be one division wide as shown in Figure 4. If it's not, adjust the function generator's output frequency until it is.

    Note 2: Setting the function generator this way makes each bit in the serial data stream one division wide on the graticule's horizontal axis.

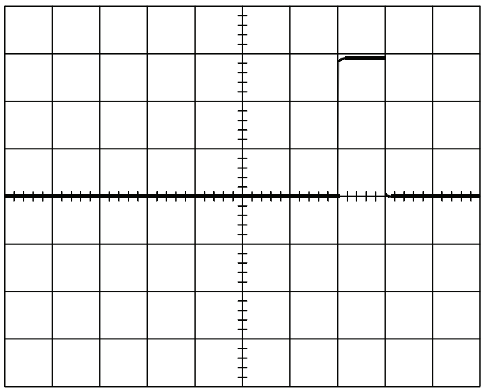

Figure 4

© 2008 Emona Instruments

18. Activate the scope's Channel 1 input (by checking the Channel 1 *Enabled* box) to observe the PCM Encoder module's *CLK* input as well as its *FS* output.

    Tip: To see the two waveforms clearly, you may need to adjust the scope so that the two signals are not overlayed.

19. Draw the two waveforms to scale in the space provided below leaving enough room for a third digital signal.

    Tip: Draw the clock signal in the upper third of the graph paper and the *FS* signal in the middle third.

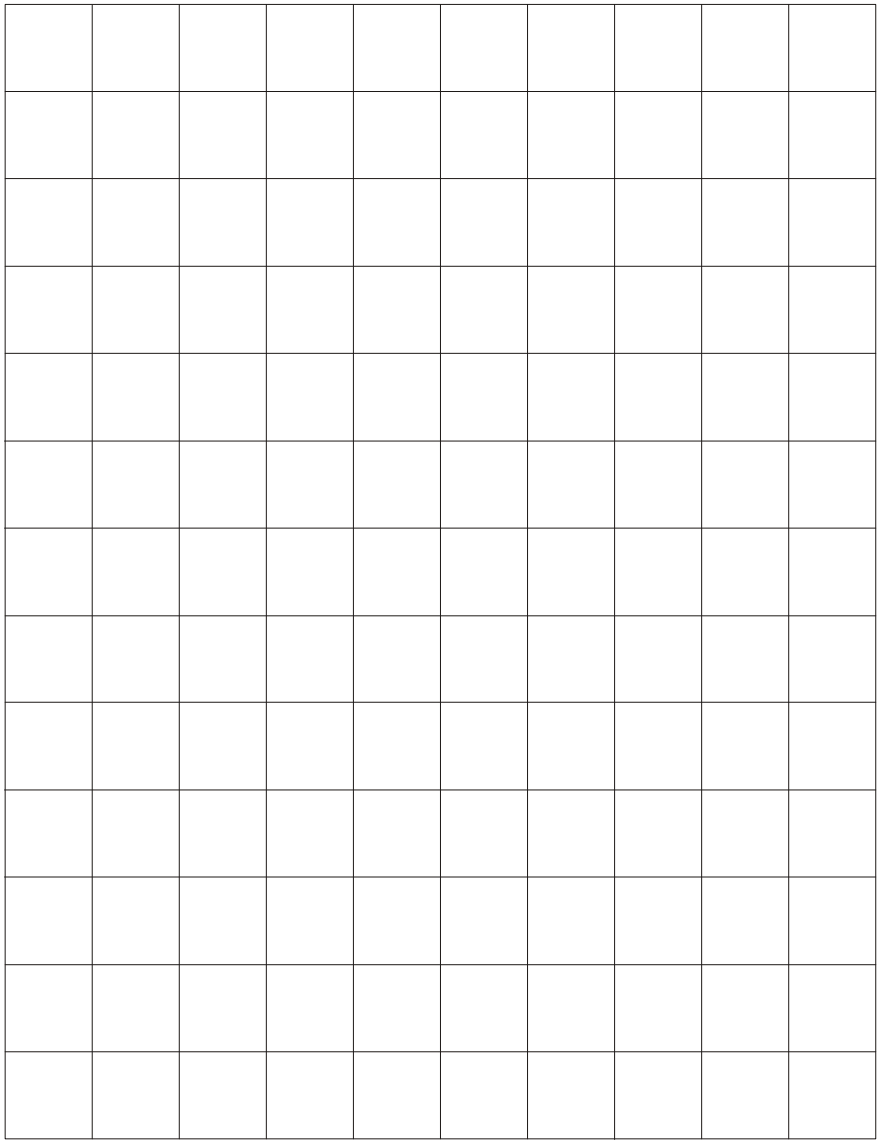

 © 2008 Emona Instruments

Ask the instructor to check your work before continuing.

20. Connect the scope's Channel 1 input to the PCM Encoder module's output as shown in Figure 5 below.

    Remember: Dotted lines show leads already in place.

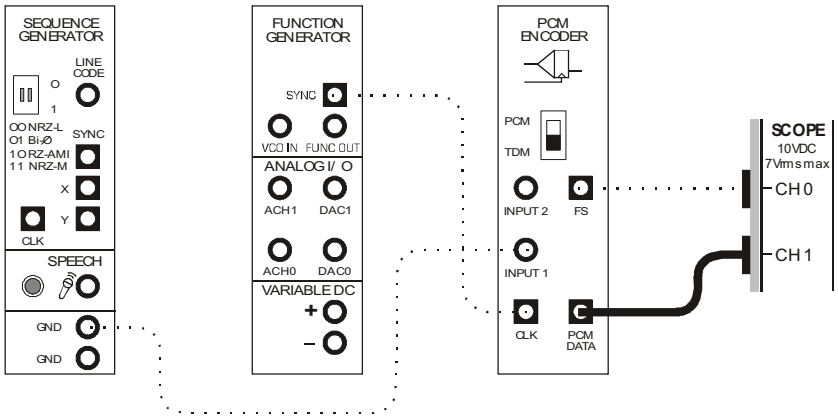

Figure 5

This set-up can be represented by the block diagram in Figure 6 below. Channel 1 should now display 10 bits of the PCM Encoder module's data output. Reading from the left of the display, the first 8 bits belong to one frame and the last two bits belong to the next frame.

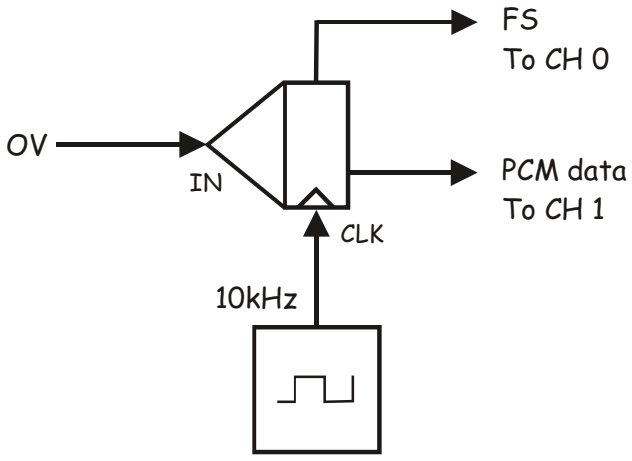

Figure 6

21. Draw this waveform to scale in the space that you left on the graph paper.

Question 1
Indicate on your drawing the start and end of the frame. **Tip:** If you're not sure where these points are, see the preliminary discussion.

Question 2
Indicate on your drawing the start and end of each bit.

Question 3
Indicate on your drawing which bit is bit-0 and which is bit-7.

Question 4
What is the binary number that the PCM Encoder module is outputting?

Question 5
Why does the PCM Encoder module output this code for 0V DC and not 0000000?



Ask the instructor to check your work before continuing.

 © 2008 Emona Instruments

Part B – PCM encoding of a variable DC voltage

So far, you have used the PCM Encoder module to convert a fixed DC voltage (0V) to PCM. The next part of the experiment lets you see what happens when you vary the DC voltage.

22. Launch and run the NI ELVIS II Variable Power Supplies VI.

23. Set the Variable Power Supplies two outputs to 0V.

24. Unplug the patch lead connected to the ground socket.

25. Modify the set-up as shown in Figure 7 below.

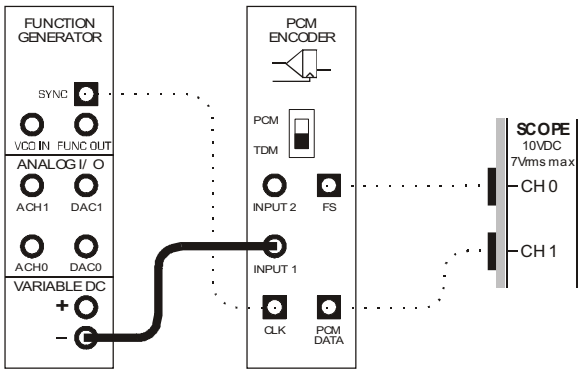

Figure 7

This set-up can be represented by the block diagram in Figure 8 on the next page. The NI ELVIS II Variable Power Supplies is used to let you vary the DC voltage on the PCM Encoder module's input. The scope's external trigger input is used to obtain a stable display.

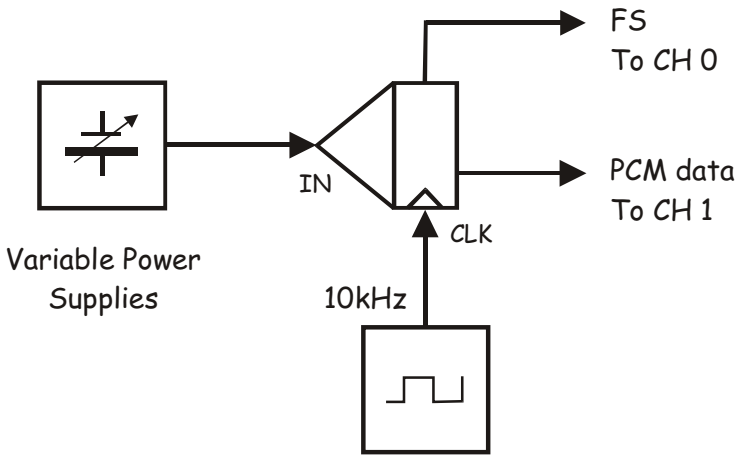

Figure 8

26. Determine the code on the PCM Encoder module's output.

Tip: Remember, the first eight horizontal divisions of the scope's graticule correspond with one frame of the PCM Encoder module's output.

Note: You should find that the PCM Encoder module's output is a binary number that is reasonably close to the code you determined earlier when the module's input was connected directly to ground.

Ask the instructor to check your work before continuing.

27. Increase the Variable Power Supplies' negative output voltage in -0.1V increments and note what happens to the binary number on the PCM Encoder module's output.

Tip: This is easiest to do by simply typing the required voltage in the field under the negative output's *Voltage* control. When you do, don't forget to put a minus sign in front of the voltage you enter.

Question 6
What happens to the binary number as the input voltage increases in the negative direction?

---

28. Determine the first instance of the changing negative voltage that produces the number 00000000 on the PCM Encoder module's output.

29. Record this voltage in Table 1 below.

Table 1

PCM Encoder's output code	PCM Encoder's input voltage
00000000	



Ask the instructor to check your work before continuing.

30. Modify the set-up as shown in Figure 9 below.

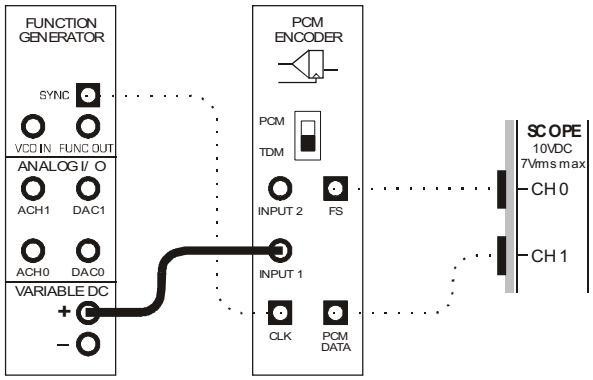

Figure 9

This set-up can be represented by the block diagram in Figure 10 below.

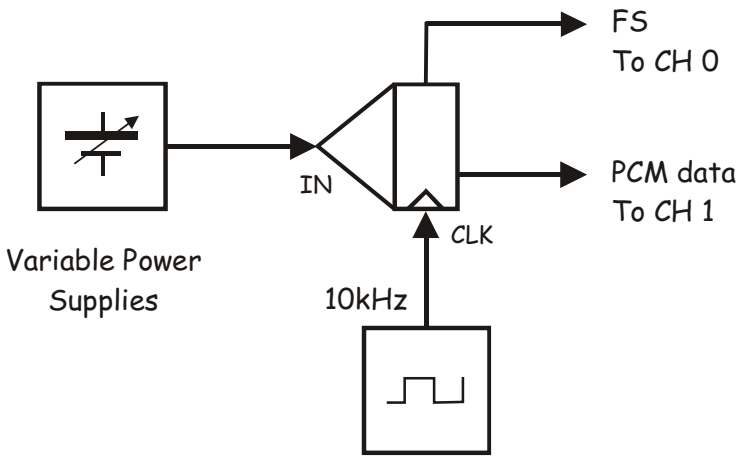

Figure 10

 © 2008 Emona Instruments

31. Increase the Variable Power Supplies' positive output voltage in +0.1V increments and note what happens to the binary number on the PCM Encoder module's output.

Question 7
What happens to the binary number as the input voltage increases in the positive direction?

---

32. Determine the lowest positive voltage that produces the number 11111111 on the PCM Encoder module's output.

33. Record this voltage in Table 2 below.

Table 2

PCM Encoder's output code	PCM Encoder's input voltage
11111111	

Question 8
Based on the information in Tables 1 & 2, what is the maximum allowable peak-to-peak voltage for an AC signal on the PCM Encoder module's *INPUT*?

Question 9
Calculate the difference between the PCM Encoder module's quantisation levels by subtracting the values in Tables 1 & 2 and dividing the number by 256 (the number of codes).



Ask the instructor to check your work before continuing.

Part C – PCM encoding of continuously changing voltages

Now let's see what happens when the PCM encoder is used to convert continuously changing signals like a sinewave.

34. Close the Variable Power Supplies VI.

35. Disconnect the plugs to the Variable Power Supplies positive output.

36. Modify the set-up as shown in Figure 11 below.

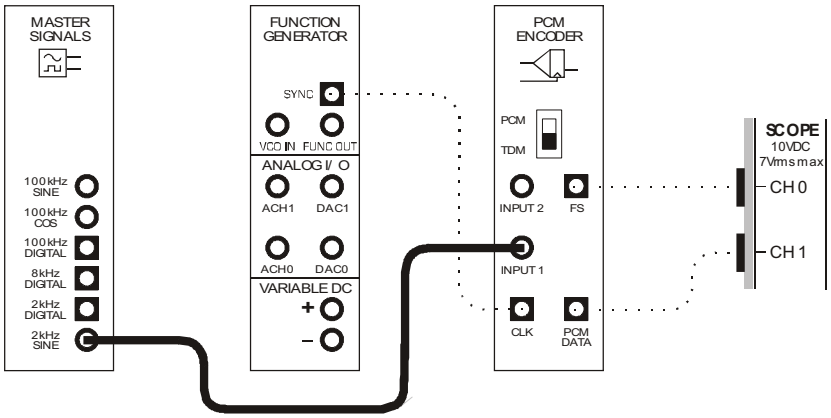

Figure 11

37. Set the function generator's output frequency to 50kHz.

38. Watch the PCM Encoder module's output on the scope's display.

Question 10

Why does the code on PCM Encoder module's output change continuously?

Ask the instructor to check your work before finishing.

 © 2008 Emona Instruments

Name: _____

Class: _____

15 - PCM decoding

Experiment 15 – PCM decoding

Preliminary discussion

The previous experiment introduced you to the basics of pulse code modulation (PCM) which you'll recall is a system for converting message signals to a continuous serial stream of binary numbers (*encoding*). Recovering the message from the serial stream of binary numbers is called *decoding*.

At its simplest, decoding involves:

- Identifying each new frame in the data stream.
- Extracting the binary numbers from each frame.
- Generating a voltage that is proportional to the binary number.
- Holding the voltage on the output until the next frame has been decoded (forming a pulse amplitude modulation (PAM) version of the original message signal).
- Reconstructing the message by passing the PAM signal through a low-pass filter.

The PCM decoder's clock frequency is crucial to the correct operation of simple decoding systems. If it's not the same frequency as the encoder's clock, some of the transmitted bits are read twice while others are completely missed. This results in some of the transmitted numbers being incorrectly interpreted, which in turn causes the PCM decoder to output an incorrect voltage. The error is audible if it occurs often enough. Some decoders manage this issue by being able to "self-clock".

There is another issue crucial to PCM decoding. The decoder must be able to detect the beginning of each frame. If this isn't done correctly, every number is incorrectly interpreted. The synchronising of the frames can be managed in one of two ways. The PCM encoder can generate a special *frame synchronisation* signal that can be used by the decoder though this has the disadvantage of needing an additional signal to be sent. Alternatively, a frame synchronisation code can be embedded in the serial data stream that is used by the decoder to work out when the frame starts.

A little information about the DATEx PCM Decoder module

Like the PCM Encoder module on the Emona DATEx, the PCM Decoder module works with 8-bit binary numbers. For 00000000 the PCM Decoder module outputs -2V and for 11111111 it outputs +2V. For numbers in between, the output is a proportional voltage between ±2V. For example, the number 10000000 is half way between 00000000 and 11111111 and so for this input the module outputs 0V (which is half way between +2V and -2V).

The PCM Decoder module is not self-clocking and so it needs a digital signal on the *CLK* input to operate. Importantly, for the PCM Decoder module to correctly decode the PCM data generated by the PCM Encoder module, it must have the same clock signal. In other words, the decoder's clock must be "stolen" from the encoder.

Similarly, the PCM Decoder module cannot self-detect the beginning of each new frame and so it must have a frame synchronisation signal on its *FS* input to do this.

The experiment

For this experiment you'll use the Emona DATEx to convert a sinewave and speech to a PCM data stream then convert it to a PAM signal using the PCM Decoder module. For this to work correctly, the decoder's clock and frame synchronisation signal are simply "stolen" the PCM Encoder module. You'll then recover the message using the Tuneable Low-pass filter module.

It should take you about 45 minutes to complete this experiment.

Equipment

- Personal computer with appropriate software installed
- NI ELVIS II plus USB cable and power pack
- Emona DATEx experimental add-in module
- Two BNC to 2mm banana-plug leads
- Assorted 2mm banana-plug patch leads
- One set of headphones (stereo)

 © 2008 Emona Instruments

Procedure

Part A – Setting up the PCM encoder

To experiment with PCM decoding you need PCM data. The first part of the experiment gets you to set up a PCM encoder.

1. Ensure that the NI ELVIS II power switch at the back of the unit is off.

2. Carefully plug the Emona DATEx experimental add-in module into the NI ELVIS II.

3. Set the *Control Mode* switch on the DATEx module (top right corner) to *PC Control*.

4. Connect the NI ELVIS II to the PC using the USB cable.

   Note: This may already have been done for you.

5. Turn on the NI ELVIS II power switch at the rear of the unit then turn on its *Prototyping Board Power* switch at the top right corner near the power indicator.

6. Turn on the PC and let it boot-up.

7. Launch the NI ELVISmx software.

8. Launch and run the NI ELVIS II Variable Power Supplies VI.

9. Set the Variable Power Supplies' positive output to 0V.

10. Launch the DATEx soft front-panel (SFP) and check that you have soft control over the DATEx board.

11. Set the PCM Encoder module's soft *Mode* switch to the *PCM* position.

12. Connect the set-up shown in Figure 1 below.

Note: Insert the black plugs of the oscilloscope leads into a ground (*GND*) socket.

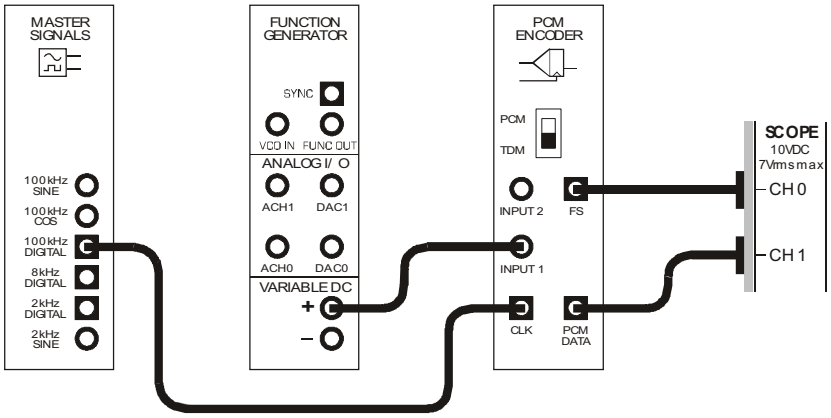

Figure 1

This set-up can be represented by the block diagram in Figure 2 below. The PCM Encoder module is clocked by the Master Signals module's *100kHz DIGITAL* output. Its analog input is the Variable Power Supplies' positive output.

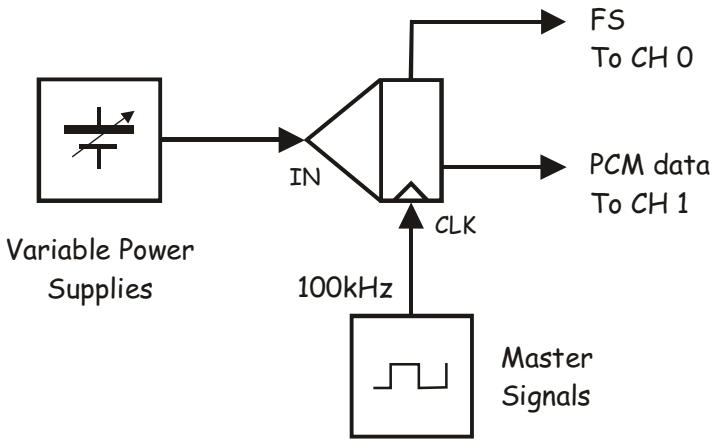

Figure 2

 © 2008 Emona Instruments

13. Launch and run the NI ELVIS II Oscilloscope VI.

14. Set up the scope per the procedure in Experiment 1 (page 1-12) with the following changes:

    - *Scale* control for both channels to *2V/div* instead of *1V/div*
    - *Coupling* control for both channels to *DC* instead of *AC*
    - *Trigger Level* control to *2V* instead of *0V*
    - *Timebase* control to *10µs/div* instead of *500µs/div*

15. Set the scope's *Slope* control to the "-" position.

16. Activate the scope's Channel 1 input (by checking the Channel 1 *Enabled* box) to observe the PCM Encoder module's *PCM DATA* output as well as its *FS* output.

17. Vary the Variable Power Supplies positive output *Voltage* control left and right (but don't exceed 2.5V).

    Note: If your set-up is working correctly, this last step should cause the number on PCM Encoder module's *PCM DATA* output to go down and up. If it does, carry on to the next step. If not, check your wiring or ask the instructor for help.

18. Close the Variable Power Supplies VI.

19. Launch and run the NI ELVIS II Function Generator VI.

20. Adjust the function generator using its soft controls for an output with the following specifications:

    - Waveshape: Sine
    - Frequency: 500Hz
    - Amplitude: 4Vpp
    - DC Offset: 0V

21. Disconnect the plug to the Variable Power Supplies' positive output.

22. Modify the set-up as shown in Figure 3 below.

Remember: Dotted lines show leads already in place.

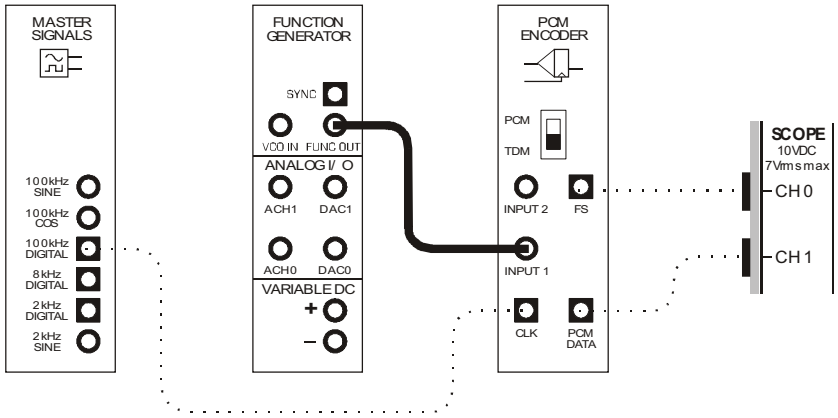

Figure 3

This set-up can be represented by the block diagram in Figure 4 below. Notice that the PCM Encoder module's input is now the function generator's output.

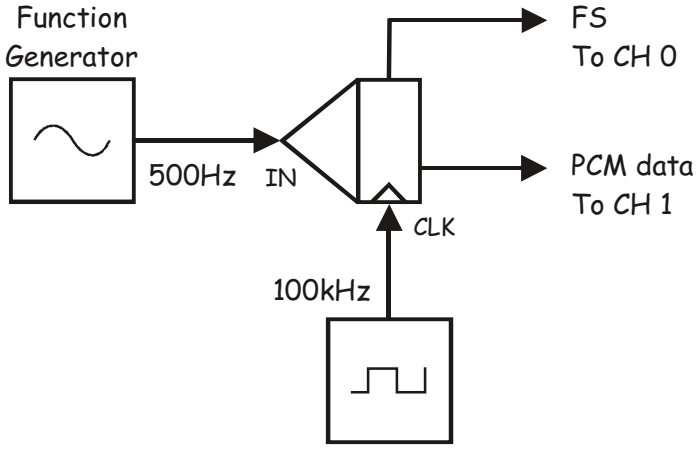

Figure 4

As the PCM Encoder module's input is a sinewave, the module's input voltage is continuously changing. This means that you should notice the *PCM DATA* output changing continuously also.

 © 2008 Emona Instruments

Ask the instructor to check your work before continuing.

Part B – Decoding the PCM data

23. Deactivate the scope's Channel 1 input.

24. Modify the set-up as shown in Figure 5 below.

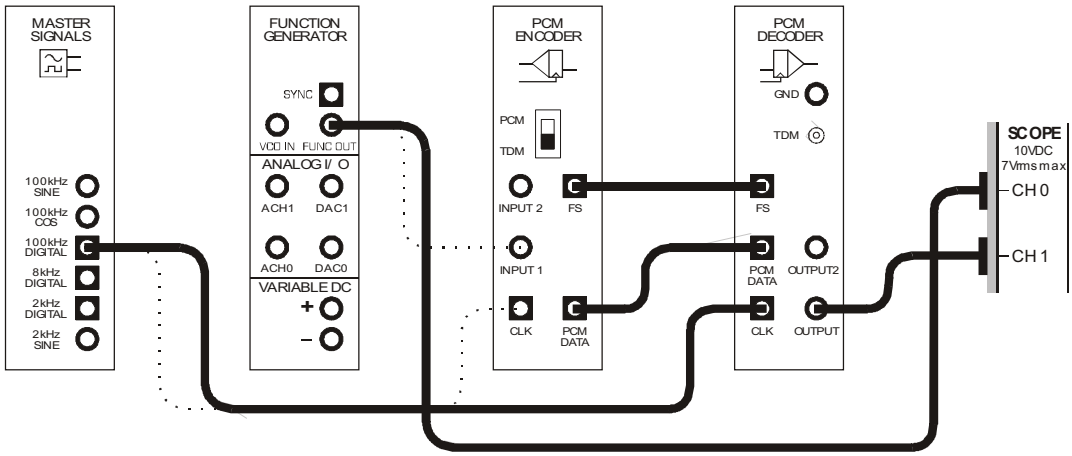

Figure 5

The entire set-up can be represented by the block diagram in Figure 6 on the next page. Notice that the decoder's clock and frame synchronisation information are "stolen" from the encoder.

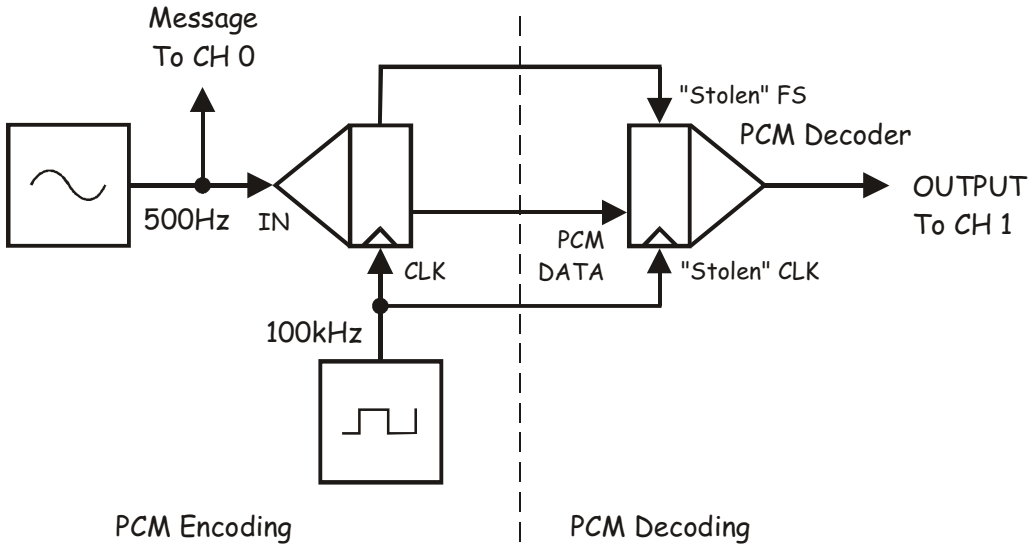

Figure 6

25. Adjust the scope as follows:

- *Scale* control for both channels to *1V/div*
- *Coupling* control for both channels to *AC*
- *Trigger Level* control to *0V*
- *Slope* control back to the "+" position
- *Timebase* control to *500µs/div*

26. Activate the scope's Channel 1 input to observe the PCM Decoder module's output as well as the message signal.

Question 1
What does the PCM Decoder's "stepped" output tell you about the type of signal that it is? **Tip:** If you're not sure, see the preliminary discussion for this experiment or for Experiment 13.

Ask the instructor to check your work before continuing.

 © 2008 Emona Instruments

The PCM Decoder module's output signal looks very similar to the message. However, they're not the same. Remember that a "sampled" message contains many sinewaves in addition to the message. The next part of this experiment lets you verify this using the NI ELVIS II Dynamic Signal Analyzer.

27. Suspend the scope's VI.

28. Launch and run the NI ELVIS II Dynamic Signal Analyzer VI.

29. Adjust the signal analyzer's controls as follows:

Input Settings

- *Source Channel* to *SCOPE CH 1*
- Voltage Range to ±10V

FFT Settings

- *Frequency Span* to *40,000*
- *Resolution* to *400*
- *Window* to *7 Term B-Harris*

Averaging

- *Mode* to *RMS*
- *Weighting* to *Exponential*
- *# of Averages* to *3*

Trigger Settings

- *Type* to *Edge*

Frequency Display

- *Units* to *dB*
- *Mode* to *RMS*
- *Scale* to *Auto*
- *Cursors On* box unchecked (for now)

30. Activate the signal analyzer's cursors (by checking *Cursors On* box).

31. Use the signal analyzer's *C1* cursor to examine the frequency of the significant sinewaves that make up the sampled message.

32. Use the *C1* cursor to locate the sinewave in the sampled message that has the same the frequency as the original message.



Ask the instructor to check your work before continuing.

You have probably just noticed that some of the extra sinewaves in the sampled message are at audible frequencies (that is, between about 20Hz and 20kHz, and in particular those about 12.5kHz). This means that, although the message and sampled messages are similar in shape, you may be able to hear a difference between them. Keep in mind that many of the components below the -40dB line are not significant. Signals that are visually below this level (but bigger numerically) are less than 1% of the level of any signals at 0dB.

Where do these "extra" components come from?
As the data clock rate is 100kHz, the "frame rate" is 1/8th of that because there are 8 bits per frame. Therefore, the PCM system is sampling the message at 12.5kHz or every 80μs.

Importantly, this means that the PCM module's output changes voltage in steps every 80μs. The spectral composition of these steps creates extra "images" of the message at 12.5kHz, 2 x 12.5kHz (25kHz), 3 x 12.5kHz (37.5kHz) and so on. It is these "images" that you can see in the spectrum.

33. Add the Amplifier module to the set-up as shown in Figure 7 below leaving the scope's connections as they are.

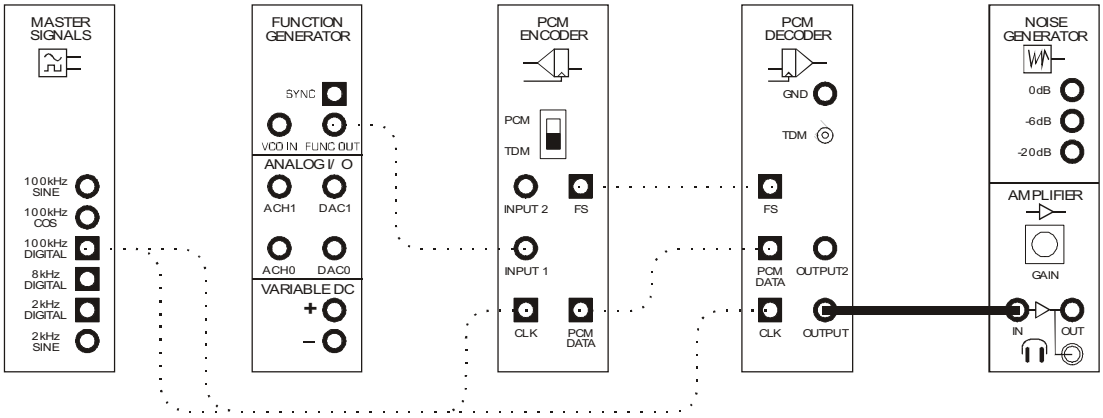

Figure 7

34. Locate the Amplifier module on the DATEx SFP and turn its soft *Gain* control fully anti-clockwise.

35. Without wearing the headphones, plug them into the Amplifier module's headphone socket.

 © 2008 Emona Instruments

36. Put the headphones on.

37. Turn the Amplifier module's soft *Gain* control clockwise until you can comfortably hear the PCM Decoder module's output.

38. Listen to how the sampled message sounds and commit it to memory.

39. Disconnect the Amplifier module's lead where it plugs to the PCM Decoder module's output.

40. Modify the set-up as shown in Figure 8 below, again leaving the scope's connections as they are.

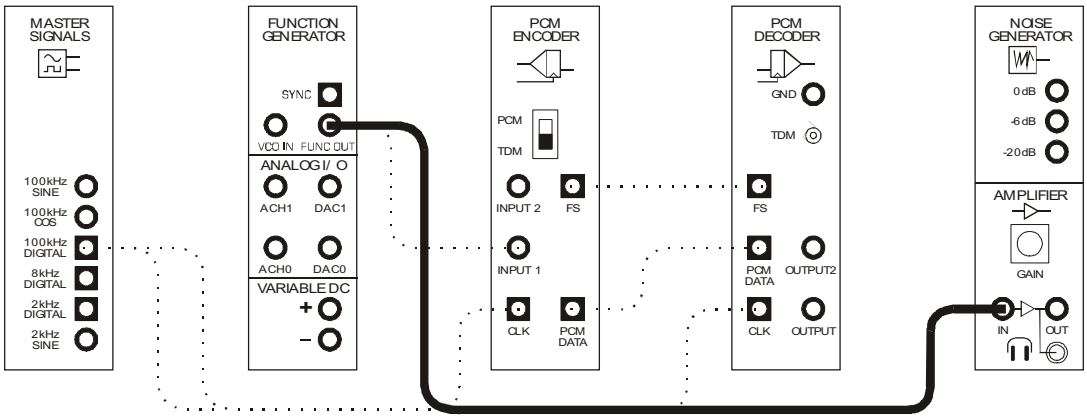

Figure 8

41. Compare the sound of the two signals. You should notice that they're similar but clearly different.

Question 2
What must be done to the PCM Decoder module's output to reconstruct the message properly?

Ask the instructor to check your work before continuing.

Part C – Encoding and decoding speech

So far, this experiment has encoded and decoded a sinewave for the message. The next part of the experiment lets you do the same with speech.

42. Close the signal analyzer's VI and restart the scope's VI.

43. Adjust the scope so that you can observe two or so cycles of the original and sampled messages again.

    Tip: Don't forget to check that the scope's *Trigger Source* control is set to the *CH 0* position.

44. Completely remove the Amplifier module from the set-up while leaving the rest of the leads in place.

45. Disconnect the plugs to the function generator's output.

46. Modify the set-up as shown in Figure 9 below.

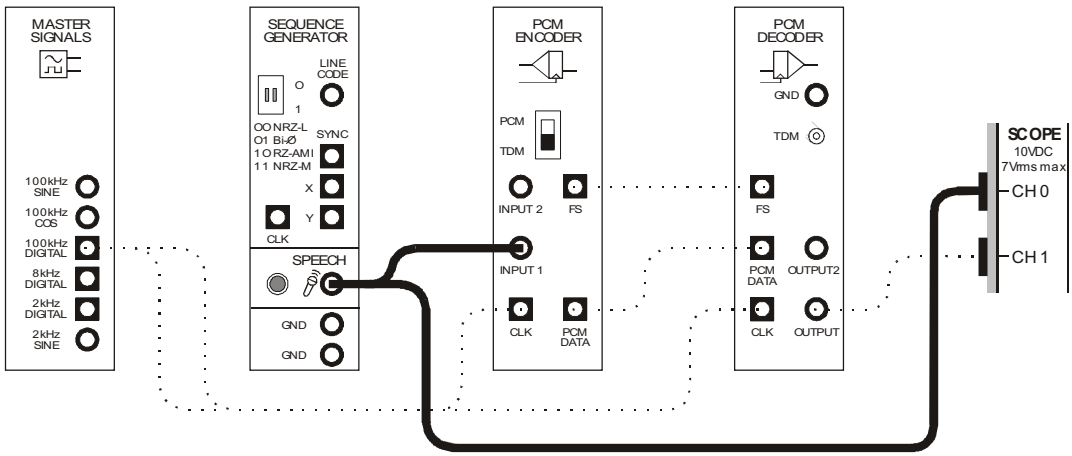

Figure 9

47. Hum and talk into the microphone while watching the scope's display.



Ask the instructor to check your work before continuing.

 © 2008 Emona Instruments

Part D – Recovering the message

As mentioned earlier, the message can be reconstructed from the PCM Decoder module's output signal using a low-pass filter. This part of the experiment lets you do this.

48. Locate the Tuneable Low-pass Filter module on the DATEx SFP and set its soft *Gain* control to about the middle of its travel.

49. Turn the Tuneable Low-pass Filter module's soft *Cut-off Frequency Adjust* control fully anti-clockwise.

50. Disconnect the plugs to the Speech module's output.

51. Modify the set-up as shown in Figure 10 below.

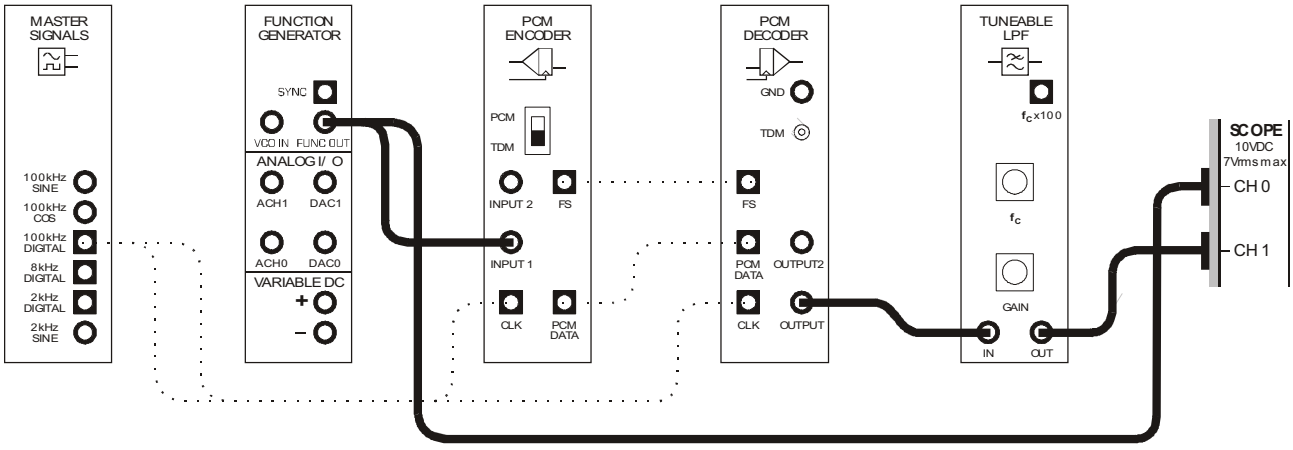

Figure 10

The entire set-up can be represented by the block diagram in Figure 11 on the next page. The Tuneable Low-pass Filter module is used to reconstruct the original message from the PCM Decoder module's PAM output.

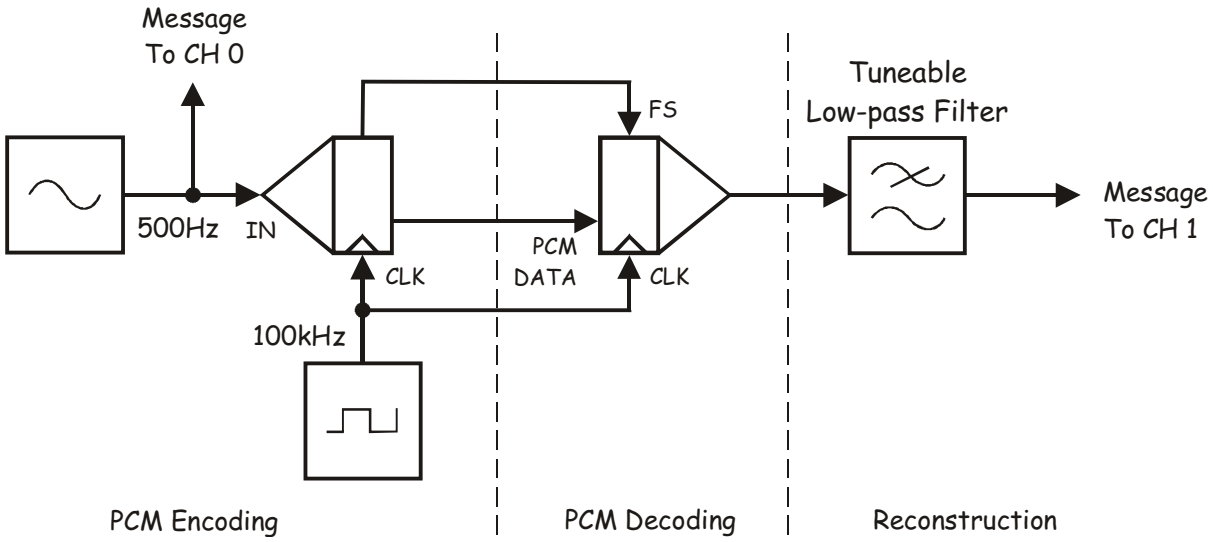

Figure 11

52. Slowly turn the Tuneable Low-pass Filter module's soft *Cut-off Frequency* control clockwise and stop the moment the message signal has been reconstructed (ignoring phase shift).

The two signals are clearly the same so let's see what your hearing tells you.

53. Add the Amplifier module to the set-up as shown in Figure 12 below leaving the scope's connections as they are.

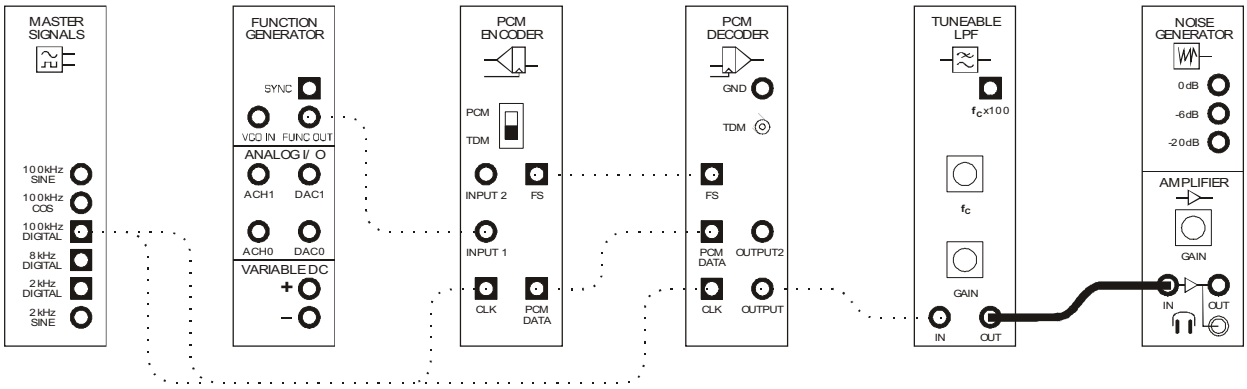

Figure 12

 © 2008 Emona Instruments

54. Turn the Amplifier module's soft *Gain* control fully anti-clockwise.

55. Put the headphones on.

56. Turn the Amplifier module's soft *Gain* control clockwise until you can comfortably hear the Tuneable Low-pass Filter module's output.

57. Commit the recovered message's sound to memory.

58. Disconnect the Amplifier module's lead where it plugs to the PCM Decoder module's output and connect it to the function generator's output (in the same way that you did when wiring the set-up in Figure 8).

59. Compare the sound of the two signals. You should find that they're very similar.

Question 3

Even though the two signals look and sound the same, why isn't the reconstructed message a perfect copy of the original message? **Tip:** If you're not sure, see the preliminary discussion for Experiment 14.



Ask the instructor to check your work before finishing.

© 2008 Emona Instruments

Name: _____

Class: _____

16 - Bandwidth limiting and restoring digital signals

Experiment 16 – Bandwidth limiting and restoring digital signals

Preliminary discussion

In the classical communications model, intelligence (the message) moves from a transmitter to a receiver over a *channel*. A number of transmission media can be used for the channel including: metal conductors (such as twisted-pair or coaxial cable), optical fibre and free-space (what people generally call the "airwaves").

Regardless of the medium used, all channels have a *bandwidth*. That is, the medium lets a range of signal frequencies pass relatively unaffected while frequencies outside the range are made smaller (or *attenuated*). In this way, the channel acts like a filter.

This issue has important implications. Recall that the modulated signal in analog modulation schemes (such as AM) consists of many sinewaves. If the medium's bandwidth isn't wide enough, some of the sinewaves are attenuated and others can be removed altogether. In both cases, this causes the demodulated signal (the recovered message) to no-longer be a faithful reproduction of the original.

Similarly, recall that digital signals are also made up of many sinewaves (called the *fundamental* and *harmonics*). Again, if the medium's bandwidth isn't wide enough, some of them are attenuated and/or removed and this can change the signal's shape.

To illustrate this last point, Figure 1 below shows what happens when all but the first two of a squarewave's sinewaves are removed. As you can see, the signal is distorted.

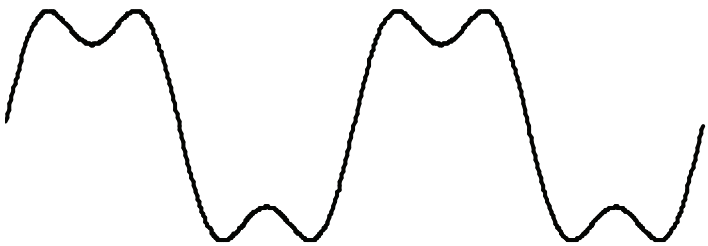

Figure 1

Making matters worse, the channel is like a filter in that it shifts the phase of sinewaves by different amounts. Again, to illustrate, Figure 2 below shows the signal in Figure 1 but with one of its two sinewaves phase shifted by 40°.



Figure 2

Imagine the difficulty a digital receiver circuit such as a PCM decoder would have trying to interpret the logic level of a signal like Figure 2. Some, and possibly many, of the codes would be misinterpreted and incorrect voltages generated. The makes the recovered message "noisy" which is obviously a problem.

The experiment

For this experiment you'll use the Emona DATEx to set up a PCM communications system. Then you'll model bandwidth limiting of the channel by introducing a low-pass filter. You'll observe the effect of bandwidth limiting on the PCM data using a scope. Finally, you'll use a comparator to restore a digital signal and observe its limitations.

It should take you about 50 minutes to complete this experiment and an additional 20 minutes to complete the Eye-Graph addendum.

Equipment

- Personal computer with appropriate software installed
- NI ELVIS II plus USB cable and power pack
- Emona DATEx experimental add-in module
- Three BNC to 2mm banana-plug leads
- Assorted 2mm banana-plug patch leads

 © 2008 Emona Instruments

Procedure

Part A – The effects of bandwidth limiting on PCM decoding

As mentioned in the preliminary discussion, bandwidth limiting in a channel can distort digital signals and upset the operation of the receiver. This part of the experiment demonstrates this using a PCM transmission system.

1. Ensure that the NI ELVIS II power switch at the back of the unit is off.

2. Carefully plug the Emona DATEx experimental add-in module into the NI ELVIS II.

3. Set the *Control Mode* switch on the DATEx module (top right corner) to *PC Control*.

4. Connect the NI ELVIS II to the PC using the USB cable.

   Note: This may already have been done for you.

5. Turn on the NI ELVIS II power switch at the rear of the unit then turn on its *Prototyping Board Power* switch at the top right corner near the power indicator.

6. Turn on the PC and let it boot-up.

7. Launch the NI ELVISmx software.

8. Launch and run the NI ELVIS II Function Generator VI.

9. Adjust the function generator using its soft controls for an output with the following specifications:

   - Waveshape: Sine
   - Frequency: 20Hz
   - Amplitude: 4Vpp
   - DC Offset: 0V

10. Minimise the function generator's VI.

11. Launch the DATEx soft front-panel (SFP) and check that you have soft control over the DATEx board.

12. Set the PCM Encoder module's soft *Mode* switch to the *PCM* position.

13. Connect the set-up shown in Figure 3 below.

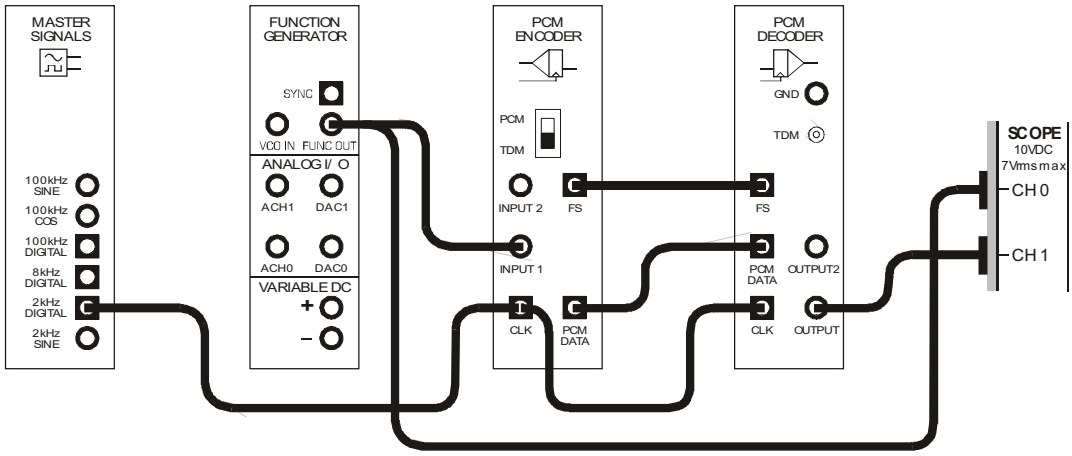

Figure 3

This set-up can be represented by the block diagram in Figure 4 below. The PCM Encoder module converts the function generator's output to a digital signal which the PCM Decoder returns to a sampled version of the original signal. Importantly, the patch lead that connects the PCM Encoder module's *PCM DATA* output to the PCM Decoder module's *PCM DATA* input is the communication system's "channel".

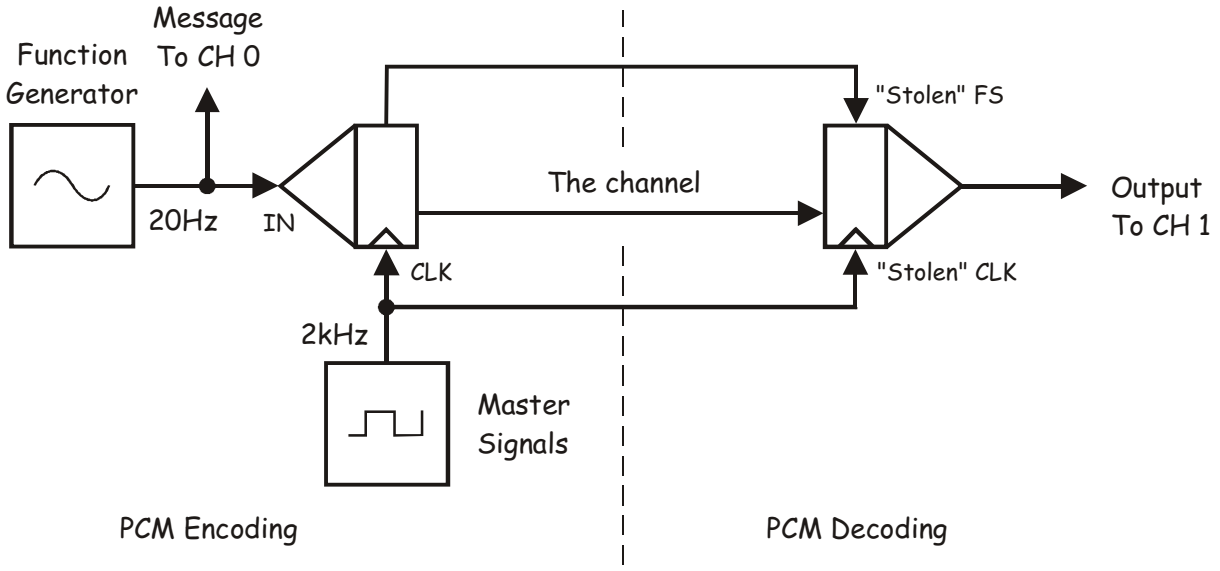

Figure 4

14. Launch and run the NI ELVIS II Oscilloscope VI.

15. Set up the scope per the procedure in Experiment 1 with the following change:

    - *Timebase* control to *10ms/div* instead of *500µs/div*

16. Activate the scope's Channel 1 input to observe the PCM Decoder module's output as well as the PCM Encoder module's input.

    Note: If the set-up is working, you should see a 20Hz sinewave for the message and its sampled equivalent out of the PCM Encoder module.



Ask the instructor to check your work before continuing.

17. Locate the Tuneable Low-pass Filter module on the DATEx SFP and set its soft *Gain* control to about the middle of its travel.

18. Set the Tuneable Low-pass Filter module's soft *Cut-off Frequency Adjust* control to about the middle of its travel.

19. Modify the set-up as shown in Figure 5 below.

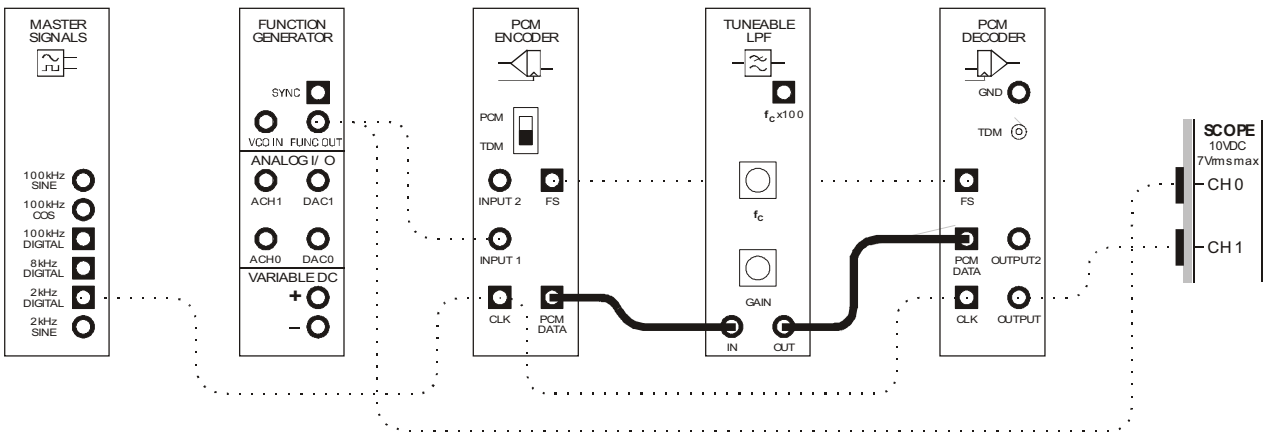

Figure 5

 © 2008 Emona Instruments

The set-up in Figure 5 can be represented by the block diagram in Figure 6 below. The Tuneable Low-pass Filter module models bandwidth limiting of the channel.

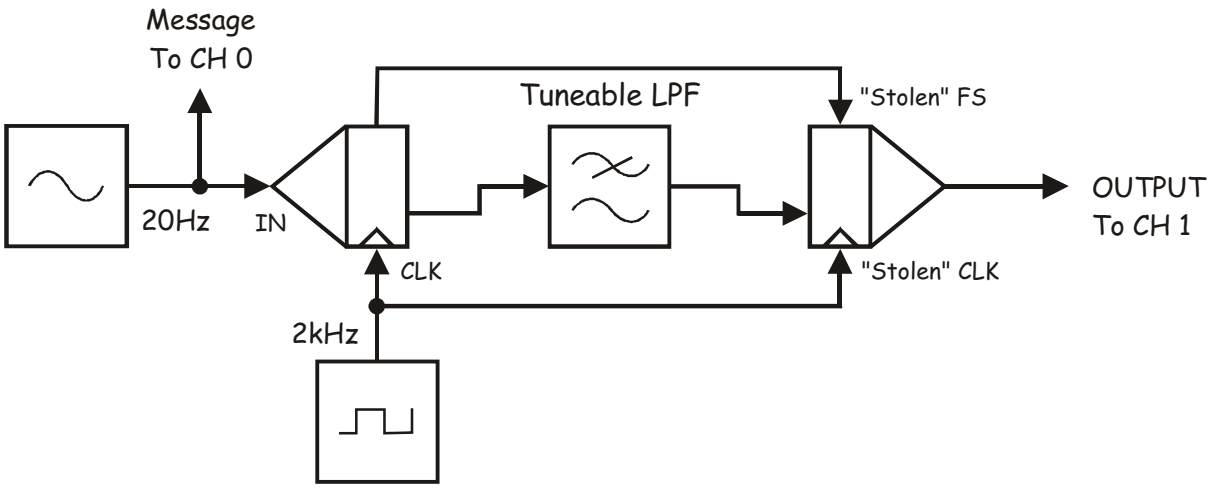

Figure 6

20. Slowly turn the Tuneable Low-pass Filter module's soft *Cut-off Frequency Adjust* control anti-clockwise.

    Tip: Use the keyboard's *TAB* and arrow keys to make fine adjustment of this control.

21. Stop the moment the PCM Decoder module's output contains the occasional error.

Question 1
What's causing the errors on the PCM Decoder module's output? **Tip:** If you're not sure, see the preliminary discussion.

Question 2
If this were a communications system transmitting speech, what would these errors sound like when the message is reconstructed?

 © 2008 Emona Instruments

22. Reduce the channel's bandwidth further to observe the effect of severe bandwidth limiting of the channel on the PCM Decoder module's output.



Ask the instructor to check your work before continuing.

You have just seen what bandwidth limiting has done to the sampled signal in the time domain so now let's look at what happens in the frequency domain.

23. Increase the channel's bandwidth just until the PCM Decoder's output no-longer contains errors.

24. Suspend the scope VI's operation by clicking on its *Stop* control once.

25. Launch and run the NI ELVIS II Dynamic Signal Analyzer VI.

26. Adjust the signal analyzer's controls as follows:

Input Settings

- *Source Channel* to *SCOPE CH 1*
- Voltage Range to ±10V

FFT Settings

- *Frequency Span* to *1,000*
- *Resolution* to *400*
- *Window* to *7 Term B-Harris*

Averaging

- *Mode* to *RMS*
- *Weighting* to *Exponential*
- *# of Averages* to *3*

Trigger settings

- *Type* to *Edge*

Frequency Display

- *Units* to *dB*
- *Mode* to *RMS*
- *Scale* to *Auto*
- *Cursors On* box unchecked (for now)

27. Activate the signal analyzer's cursors (by checking *Cursors On* box).

28. Use the signal analyzer's *C1* cursor to examine the frequency of the sinewaves that make up the sampled message.

29. Use the *C1* cursor to locate the sinewave in the sampled message that has the same the frequency as the original message.

30. Reduce the channel's bandwidth so that the PCM Decoder module's output contains occasional errors and observe the effect on the signal's spectral composition.

    Tip: Use the signal analyzer's lower display (which is basically a scope) to help you set the level of errors.

31. Reduce the channel's bandwidth so that the PCM Decoder module's output is severely bandwidth limited and observe the effect on the signal's spectral composition.

Question 3

The signal analyzer's trace should now be much smoother than it was before (that is, fewer peaks and troughs). What is this telling you about the spectral composition of the PCM Decoder module's output?

Question 4

These extra sinewaves are heard as noise. Why doesn't the Tuneable Low-pass Filter module remove them?



Ask the instructor to check your work before continuing.

 © 2008 Emona Instruments

Part B – The effects of bandwidth limiting on a digital signal's shape
You've seen how a channel's bandwidth can upset a receiver's operation. Now let's have a look at how it affects the shape of the digital signal at the receiver's input.

Importantly, digital signals that are generated by a message such as a sinewave, speech or music cannot be used for this part of the experiment. This is because the data stream is too irregular for the scope to be able to lock onto the signal and show a stable sequence of 1s and 0s. To get around this problem the Sequence Generator module's 32-bit sequence is used to model a digital data signal.

32. Close the signal analyzer's VI.

33. Completely dismantle the previous set-up.

34. Set the Tuneable Low-pass Filter module's soft *Gain* control to about the middle of its travel.

35. Turn the Tuneable Low-pass Filter module's soft *Cut-off Frequency Adjust* control fully clockwise.

36. Locate the Sequence Generator module on the DATEx SFP and set its soft dip-switches to 00.

37. Connect the set-up shown in Figure 7 below.

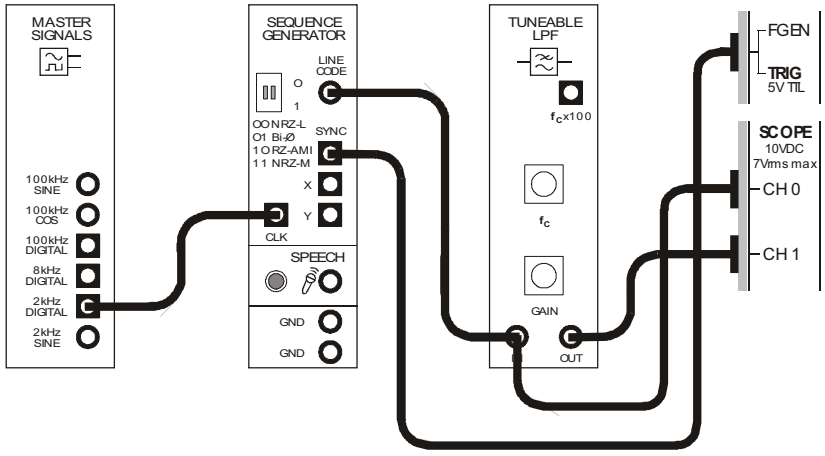

Figure 7

This set-up can be represented by the block diagram in Figure 8 on the next page. The Sequence Generator module is used to model a digital signal and its SYNC output is used to trigger the scope to provide a stable display.

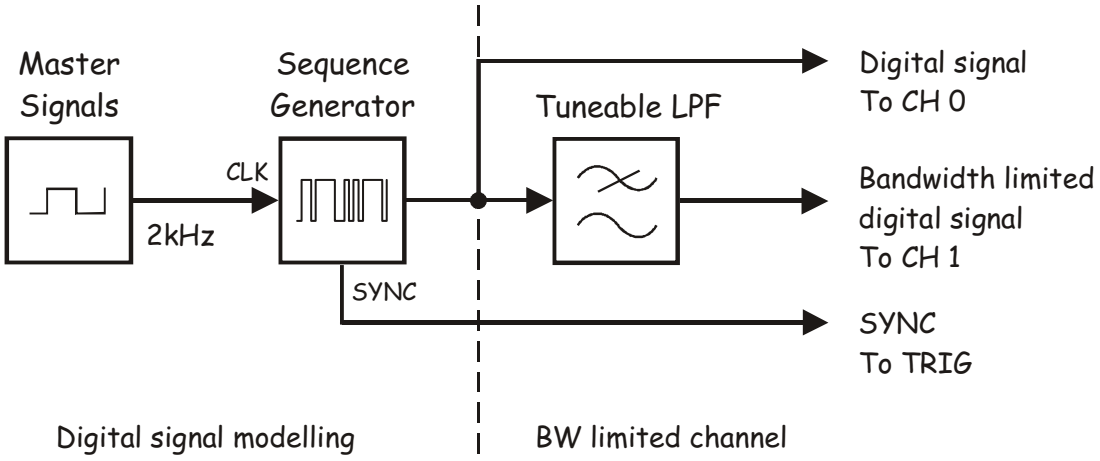

Figure 8

38. Restart the scope's VI by clicking its *Run* control once.

39. Adjust the following scope controls:

    - *Trigger Type* control to *Digital*
    - *Timebase* control to *1ms/div*

40. Note the effects of making the channel's bandwidth narrower by turning the Tuneable Low-pass Filter module's soft *Cut-off Frequency Adjust* control anti-clockwise.

Question 5
What two things are happening to cause the digital signal to change shape? **Tip:** If you're not sure, see the preliminary discussion.

Ask the instructor to check your work before continuing.

 © 2008 Emona Instruments

An obvious solution to the problem of bandwidth limiting of the channel is to use a transmission medium that has a sufficiently wide bandwidth for the digital data. In principle, this is a good idea that is used - certain cable designs have better bandwidths than others. However, as digital technology spreads, there are demands to push more and more data down existing channels. To do so without slowing things down requires that the transmission bit rate be increased. This ends up having the same effect as reducing the channel's bandwidth. The next part of the experiment demonstrates this.

41. Turn the Tuneable Low-pass Filter module's soft *Cut-off Frequency Adjust* control fully clockwise to make the channel's bandwidth as wide as possible (about 13kHz).

42. Launch and run the NI ELVIS II Function Generator VI.

43. Adjust the function generator for a 2kHz output.

    Note: It's not necessary to adjust any other controls as the function generator's *SYNC* output will be used and this is a digital signal.

44. Check that the function generator's *Signal Route* option (near the bottom right-hand corner of the VI) is set to *Prototyping Board*.

    Note: This must be done to prevent the function generator's output from being sent to the scope's *TRIG* input and causing a hardware conflict.

45. Modify the set-up as shown in Figure 9 below.

    Note: As you have set up the function generator's output for a signal that's the same as the Master Signals module's *2kHz DIGITAL* output, the signals on the scope shouldn't change.

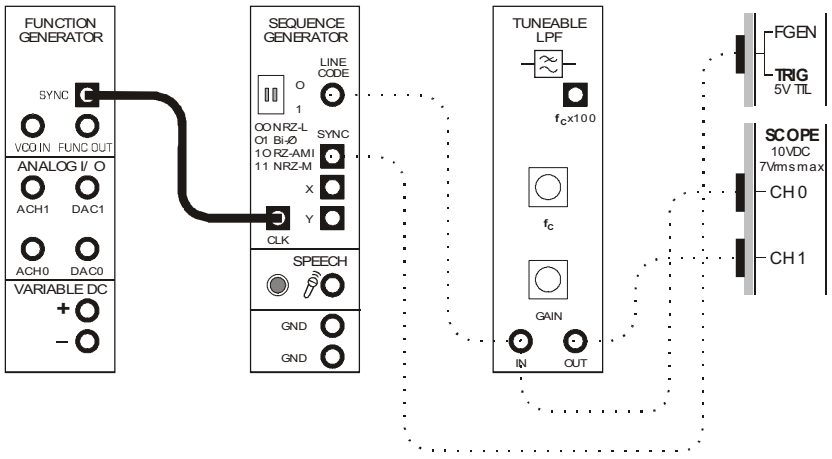

Figure 9

The set-up in Figure 9 can be represented by the block diagram in Figure 10 below. Notice that the Sequence Generator module's clock is now provided by the function generator's output and so it is variable.

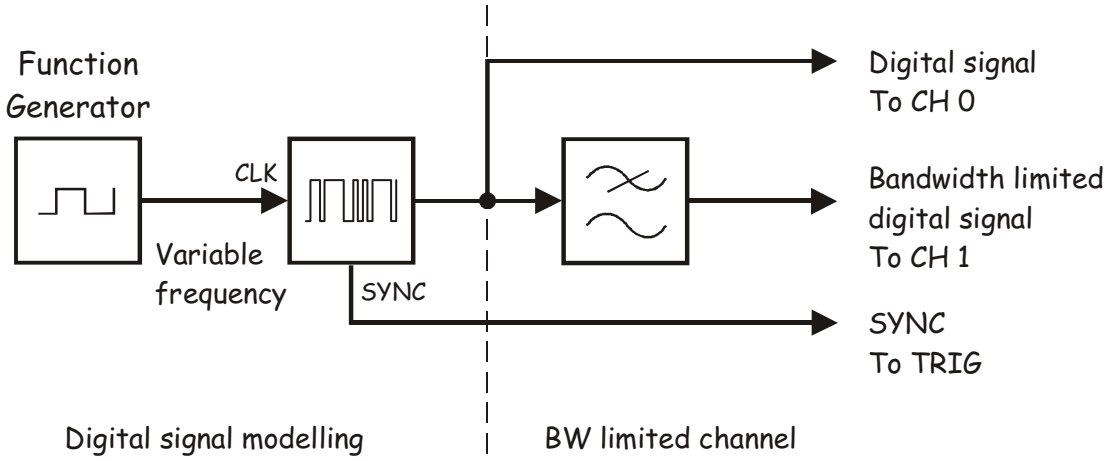

Figure 10

46. To model increasing the transmission bit-rate, increase the function generator's output frequency in 5,000Hz intervals until the clock is about 50kHz.

    Tip: As you do this, you'll need to adjust the scope's *Timebase* control as well so that you can properly see the digital signals.

Question 6

What other change to your communication system distorts the digital signal in the same way as increasing its bit-rate?

Ask the instructor to check your work before continuing.

 © 2008 Emona Instruments

Part C – Restoring digital signals

As you have seen, bandwidth limiting distorts digital signals. As you have also seen, digital receivers such as PCM decoders have problems trying to interpret bandwidth limited digital signals. The trouble is, bandwidth limiting is almost inevitable and its effects get worse as the digital signal's bit-rate increases.

To manage this problem, the received digital signal must be cleaned-up or "restored" before it is decoded. A device that is useful for this purpose is the comparator. Recall that the comparator amplifies the difference between the voltages on its two inputs by an extremely large amount. This always produces a heavily clipped or "squared-up" version of any AC signal connected to one input if it swings above and below a DC voltage on the other input.

As you know, ordinarily we avoid clipping but in this case it's very useful. The bandwidth limited digital signal is connected to one of the comparator's inputs and a variable DC voltage is connected to the other. The bandwidth limited digital signal swings above and below the DC voltage to produce a digital signal on the comparator's output. Then, the variable DC voltage is adjusted until this happens at the right points in the bandwidth limited digital signal for the comparator's output to be a copy of the original digital signal.

Unfortunately, this simple yet clever idea has its limitations. First, bandwidth limiting can distort the digital signal too much for the comparator to restore accurately (that is, without errors). Second, the channel can cause the received digital signal (and the hence the restored digital signal) to become phase shifted. For reasons not explained here this can cause other problems for receivers.

This part of the experiment lets you restore a bandwidth limited digital signal using a comparator and observe these limitations.

47. Launch and run the NI ELVIS II Variable Power Supplies VI.

48. Set the Variable Power Supplies' positive output to 0V.

49. Set the scope's *Timebase* control to the *1ms/div* position.

50. Disconnect the patch lead to the function generator's output then modify the set-up as shown in Figure 11 below.

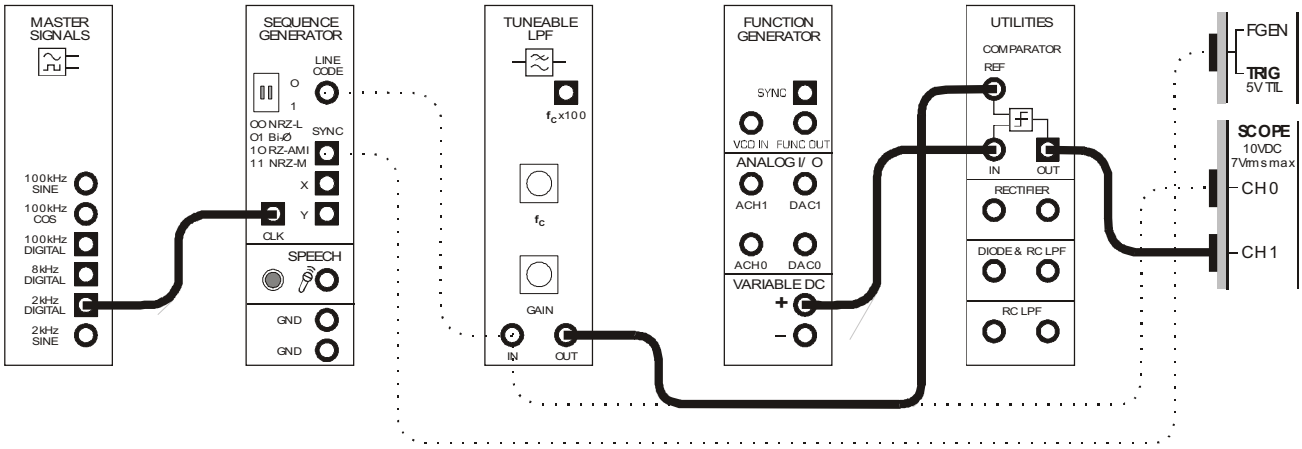

Figure 11

The entire set-up can be represented by the block diagram in Figure 12 below. The comparator on the Utilities module is used to restore the bandwidth limited digital signal.

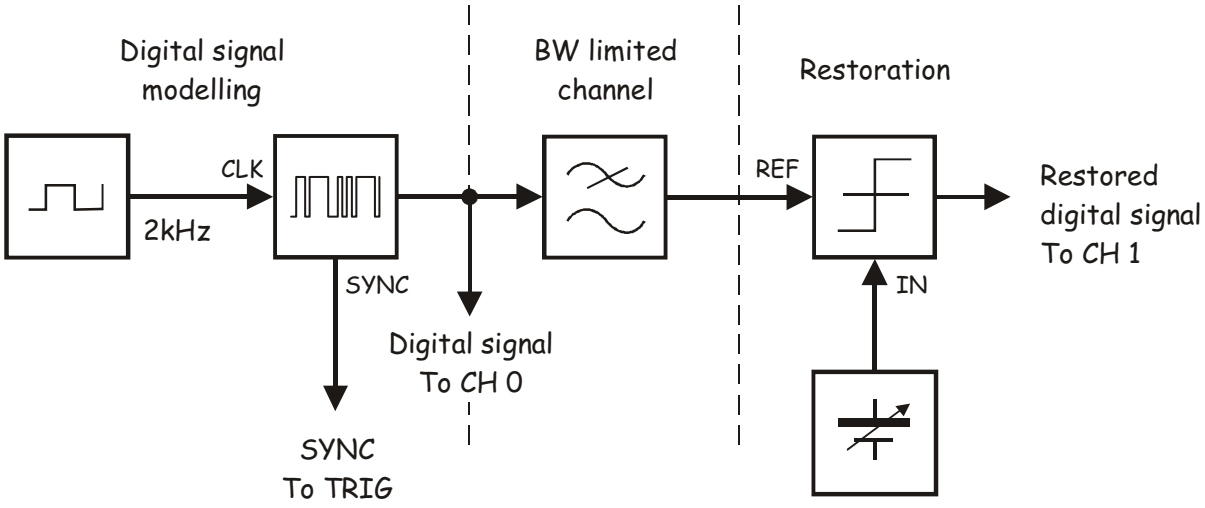

Figure 12

51. Compare the signals.

Question 7
Although the restored digital signal is almost identical to the original digital signal, there is a difference. Can you see what it is? **Tip:** If you can't, set the scope's *Timebase* control to the *100µs/div* position.

Question 8
Can this difference be ignored? Why?



Ask the instructor to check your work before continuing.

52. Return the scope's *Timebase* control to the *1ms/div* position.

53. Increase the Variable Power Supplies' positive output in 0.2V intervals and observe the effect.

Question 9
Why do some DC voltages cause the comparator to output the wrong information? **Tip:** If you're not sure, see the notes on page 16-17.



Ask the instructor to check your work before continuing.

54. Return the Variable Power Supplies positive output to 0V.

55. Slowly make the channel's bandwidth narrower by turning the Tuneable Low-pass Filter module's soft *Cut-off Frequency Adjust* control anti-clockwise.

    Note: As you do this, the phase difference between the two digital signals will increase but ignore this.

Question 10
Why does the comparator begin to output the wrong information when this control is turned far enough?

56. Make the channel's bandwidth wider and stop when the comparator's output is the same as the original digital signal (ignoring the phase shift).

57. Compare the restored digital signal with the bandwidth limited digital signal by modifying the set-up as shown in Figure 13 below.

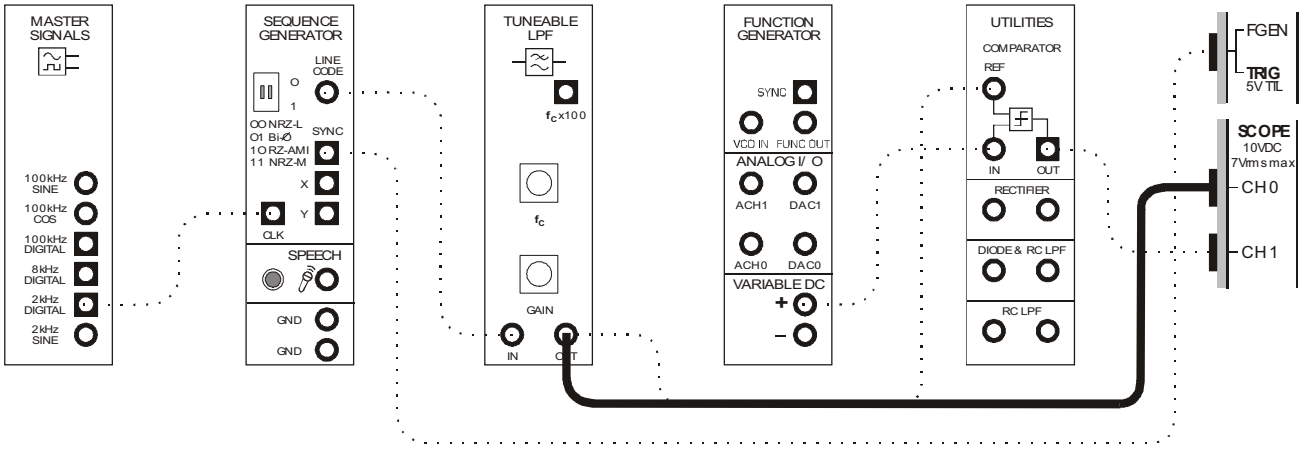

Figure 13

 © 2008 Emona Instruments

Question 11

How can the comparator restore the bandwidth limited digital signal when it is so distorted?



Ask the instructor to check your work before finishing.

Eye diagrams

Regardless of whether the digital data is received from a satellite or the optical head of a CD drive, it's important to be able to inspect and test its *distortion* (that is, the channel bandwidth & phase characteristics) and *degradation* (that is, the channel noise). One method of doing so involves using the received digital signal to develop an *Eye Diagram*.

Eye diagrams can be readily set-up using a stand-alone scope or an Eye Diagram Virtual Instrument if the NI ELVIS II test equipment is being used. For both, multiple sweeps of the scope are overlayed one upon another producing a display much like Figure 1 below.

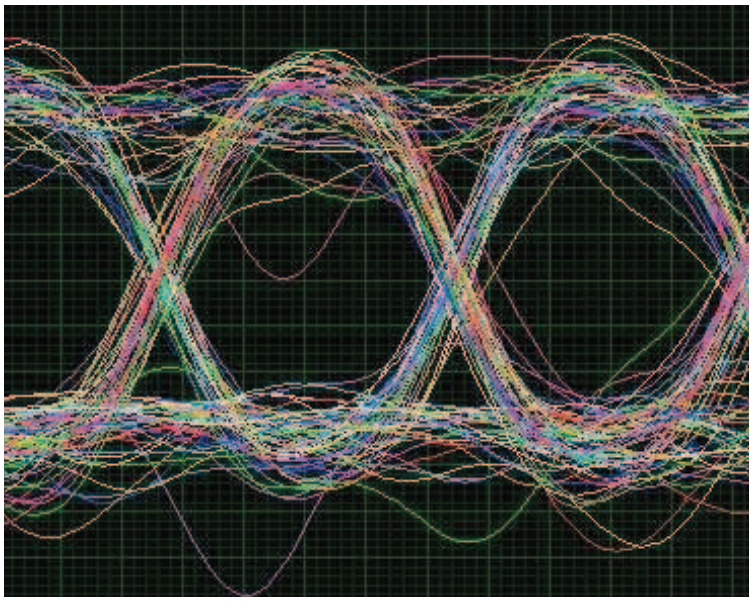

Figure 1

As you can see, the spaces between the logic-1s and logic-0s produce "eyes" in the centre of the display. Importantly, the greater the effect of bandwidth limiting and phase distortion, the less ideal the logic levels become and so the eyes begin to "close". In addition, channel noise appears as erratic traces across the centre of the eye though a scope with a very long persistence is needed to capture them if the Eye Diagram VI is not being used.

If time permits, this activity gets you to develop an Eye Diagram and observe the effect of noise and bandwidth limiting on its eyes.

© 2008 Emona Instruments

1. Completely dismantle the existing set-up.

   Note: If you're attempting this part of the experiment without having just completed the previous part, perform Steps 1 to 7 on page 16-4 and launch the DATEx SFP.

2. Check that the Sequence Generator module's soft dip-switches are set to 00.

3. Connect the set-up shown in Figure 2 below.

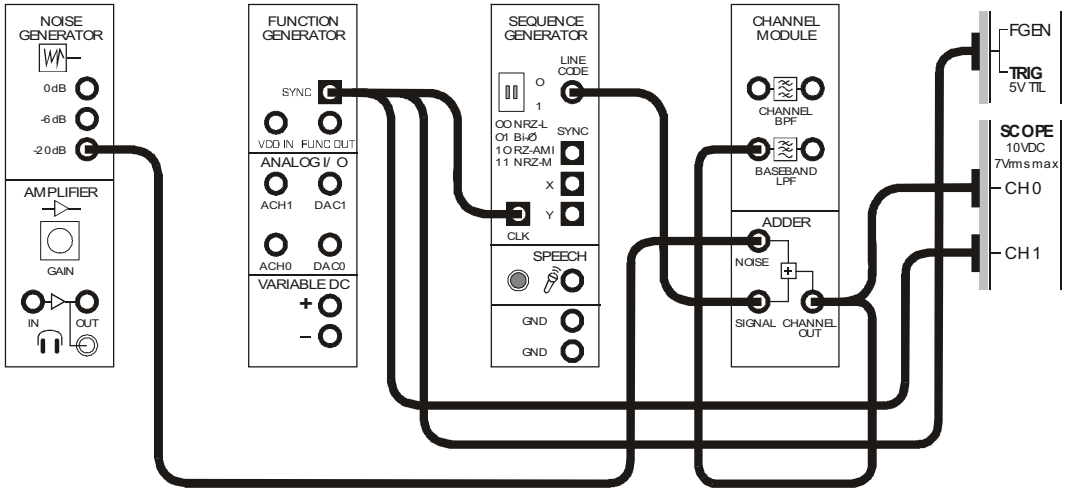

Figure 2

This set-up can be represented by the block diagram in Figure 3 below.

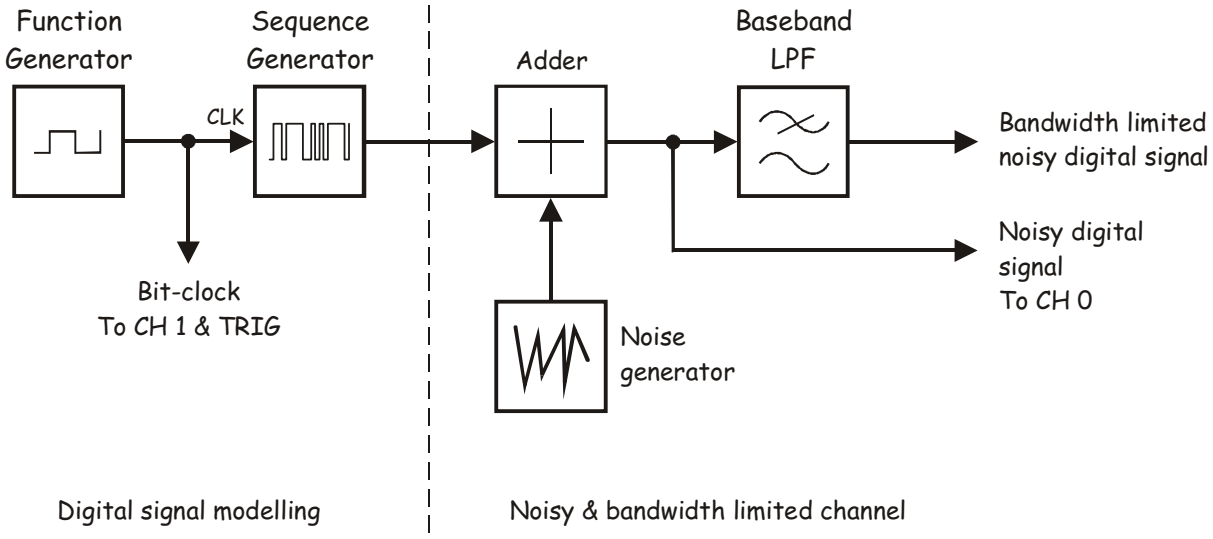

Figure 3

 © 2008 Emona Instruments

The Sequence Generator module is used to model a digital signal and its bit-clock is provided by the function generator so the data rate can be varied. An Adder is used to add noise to the digital signal that can be varied from -20dB (lowest) to 0dB (highest). The signal is finally bandwidth limited by the Baseband LPF.

4. Launch and run the NI ELVIS II Oscilloscope VI.

5. Set up the scope per the procedure in Experiment 1 with the following changes:

   - *Trigger Type* control to *Digital*
   - *Timebase* control to *1ms/div* instead of *500µs/div*

6. Activate the scope's Channel 1 input to observe the Sequence Generator module's bit-clock as well as the digital data on the Adder module's output.

7. Set the function generator's output frequency to 2kHz using its soft controls.

   Note: Once done, you should observe a digital signal with an obvious noise component.

8. Increase the digital signal's noise component to -6dB and observe the effect.

9. Increase the digital signal's noise component to 0dB and observe the effect.

10. Return the digital signal's noise component to -20dB.

11. Modify the set-up as shown in Figure 4 below.

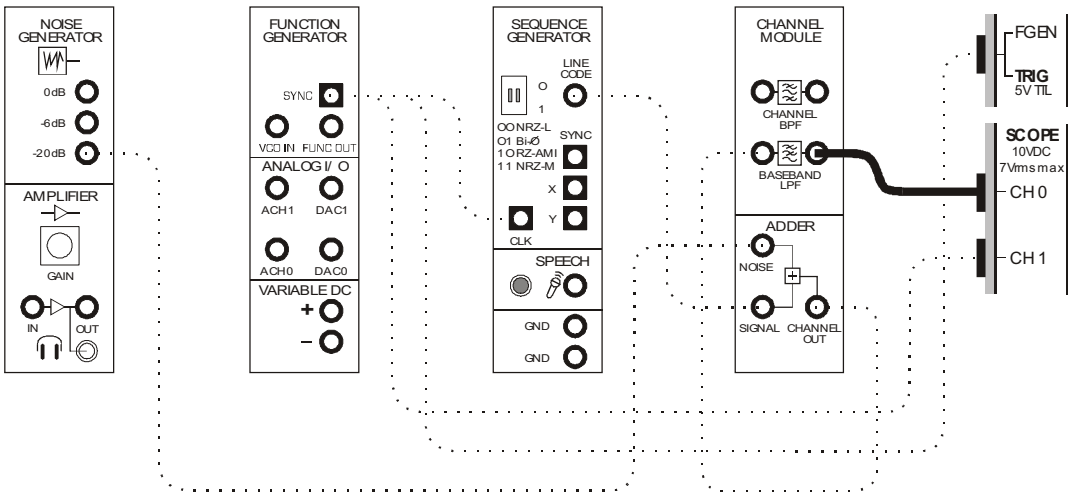

Figure 4

 © 2008 Emona Instruments

This set-up can be represented by the block diagram in Figure 5 below.

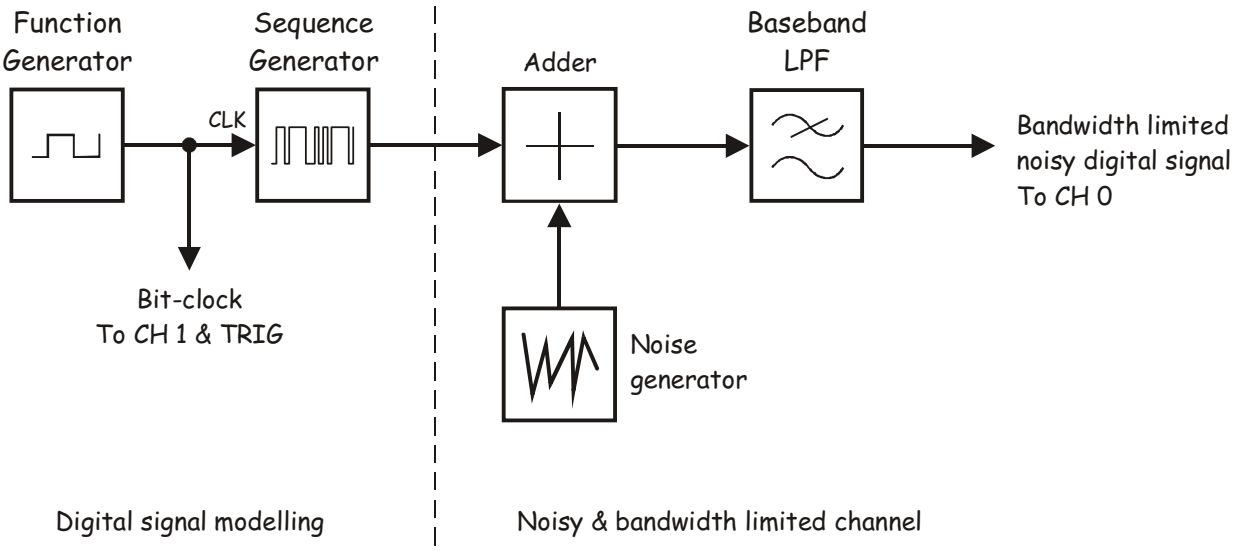

Figure 5

12. Repeat Steps 9 and 10 and observe the effect on the digital signal.

Question 1
Why has the noise disappeared?

Note: Although much of the noise has been removed, this doesn't mean that the digital signal is now unaffected. The remaining noise can still distort the digital signal enough to cause errors at the receiver. You can see the errors for yourself if you compare the signals with -20dB and 0dB of noise.

Ask the instructor to check your work before continuing.

13. Set the digital signal's noise component to -6dB.

14. Close the scope's VI.

15. Launch the DATEx *Eye-Graph* virtual instrument per the instructor's directions.

    Note 1: The DATEx *Eye-Graph* VI will launch running.

    Note 2: Within a couple of seconds of the *Eye-Graph* VI starting, multiple traces of the scope's sweep for Channel 0 (the noisy bandwidth limited digital signal) are written on the VI's screen. This will produce an eye graph similar to the one shown in Figure 1.

    Note 3: If this doesn't happen, you may need to select a different device number to the default. See the instructor for help on this.



Ask the instructor to check your work before continuing.

16. Stop the DATEx *Eye-Graph* VI by clicking its *STOP* button.

17. Increase digital signal's noise component to 0dB.

18. Run the *Eye-Graph* VI again and watch it for a couple of minutes to observe the effect.

Question 2
What's the relationship between the size of the eye and the level of noise that the channel introduces to digital signal?



Ask the instructor to check your work before continuing.

 © 2008 Emona Instruments

19. Stop the DATEx *Eye-Graph* VI.

20. Increase the digital signal's data rate by increasing the Sequence Generator module's bit-clock to 4kHz.

    Note: By increasing the digital signal's data rate, you'll increase the effect of bandwidth limiting.

21. Run the *Eye-Graph* VI again and watch it for a couple of minutes to observe the effect.

Question 3
What's the relationship between the size of the eye and the distortion level of the received digital signal?



Ask the instructor to check your work before finishing.

Name: _____

Class: _____

17 - Amplitude shift keying

Experiment 17 – Amplitude Shift Keying

Preliminary discussion

An essential part of electronic communications and telecommunications is the ability to share the channel. This is true regardless of whether the channel is copper wire, optical fibre or free-space. If it's not shared then there can only ever be one person transmitting on it at a time. Think about the implications of this for a moment. Without the ability to share, there could only be one radio or TV station in each area. Only one mobile phone owner could use their phone in each cell at any one time. And there would only be the same number of phone calls between any two cities as the number of copper wires or optical fibres that connected them.

So sharing the channel is essential and there are several methods of doing so. One is called *time division multiplexing* (TDM) and involves giving the users exclusive access to the channel for short periods of time. On the face of it, this type of sharing might seem impractical. Imagine giving all mobile phone users in a cell just a minute or so to make their call then having to wait until their turn comes around again. However, TDM works well when the access time is extremely short (less than a second) and the rate of the sharing is fast. This allows multiple users to appear to have access all at the same time.

TDM is used for digital communications and is achieved by interleaving the users' data. That is, a portion of one user's data is transmitted followed by a portion of the next user's data and so on. Unfortunately, there's a catch. If the message is real-time information that cannot afford to be delayed (like digitally encoded speech) then, as the number of users increases, so must the data's bit-rate. However, Experiment 16 has shown that doing so increases the likelihood of the channel's bandwidth distorting the signal causing errors at the receiver.

Another method of sharing the channel is called *frequency division multiplexing* (FDM) and involves giving the users exclusive and uninterrupted access to a portion of the channel's radio frequency spectrum. To transmit their message the user must superimpose it onto a carrier that sits inside their allocated band of frequencies. This method is used by broadcast radio and television to share free-space.

FDM is also used for digital communications and uses the same modulation schemes available to analog communications including: AM, DSBSC and FM. When AM is used for multiplexing digital data, it is known as *amplitude shift keying* (ASK). Other names include: *on-off keying*, *continuous wave* and *interrupted continuous wave*.

Figure 1 below shows what an ASK signal looks like time-coincident with the digital signal that has been used to generate it.

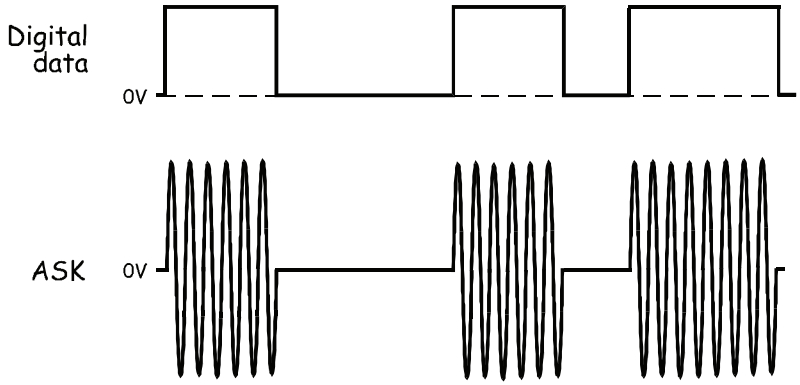

Figure 1

Notice that the ASK signal's upper and lower limits (the *envelopes*) are the same shape as the data stream (though the lower envelope is inverted). This is simultaneously an advantage and a disadvantage of ASK. Recovery of the data stream can be implemented using a simple envelope detector (refer to the preliminary discussion of Experiment 8 for an explanation of the envelope detector's operation). However, noise on the channel can change the envelopes' shape enough for the receiver to interpret the logic levels incorrectly causing errors (analog AM communications have the same problem and the errors are heard as a hiss, crackles and pops).

ASK can be generated by conventional means like the one modelled in Experiment 5. Here you'll examine the operation of an alternative method that involves using the digital signal to switch the carrier's connection to the channel on and off.

The experiment

For this experiment you'll use the Emona DATEx to generate an ASK signal using the switching method. Digital data for the message is modelled by the Sequence Generator module. You'll then recover the data using a simple envelope detector and observe its distortion. Finally, you'll use a comparator to restore the data.

It should take you about 40 minutes to complete this experiment.

 © 2008 Emona Instruments

Equipment

- Personal computer with appropriate software installed
- NI ELVIS II plus USB cable and power pack
- Emona DATEx experimental add-in module
- Three BNC to 2mm banana-plug leads
- Assorted 2mm banana-plug patch leads

Procedure

Part A – Generating an ASK signal

1. Ensure that the NI ELVIS II power switch at the back of the unit is off.

2. Carefully plug the Emona DATEx experimental add-in module into the NI ELVIS II.

3. Set the *Control Mode* switch on the DATEx module (top right corner) to *PC Control*.

4. Connect the NI ELVIS II to the PC using the USB cable.

   Note: This may already have been done for you.

5. Turn on the NI ELVIS II power switch at the rear of the unit then turn on its *Prototyping Board Power* switch at the top right corner near the power indicator.

6. Turn on the PC and let it boot-up.

7. Launch the NI ELVISmx software.

8. Connect the set-up shown in Figure 2 below.

Note: Insert the black plugs of the oscilloscope leads into a ground (*GND*) socket.

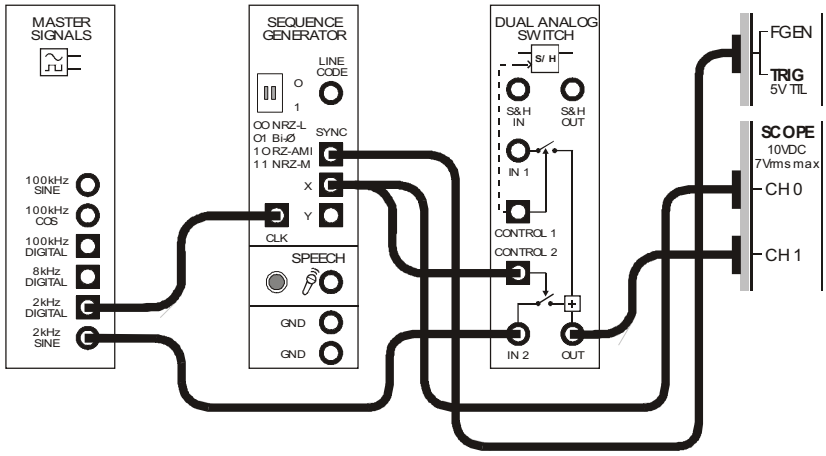

Figure 2

This set-up can be represented by the block diagram in Figure 3 below. The Sequence Generator module is used to model a digital signal and its SYNC output is used to trigger the scope to provide a stable display. The Dual Analog Switch module is used to generate the ASK signal.

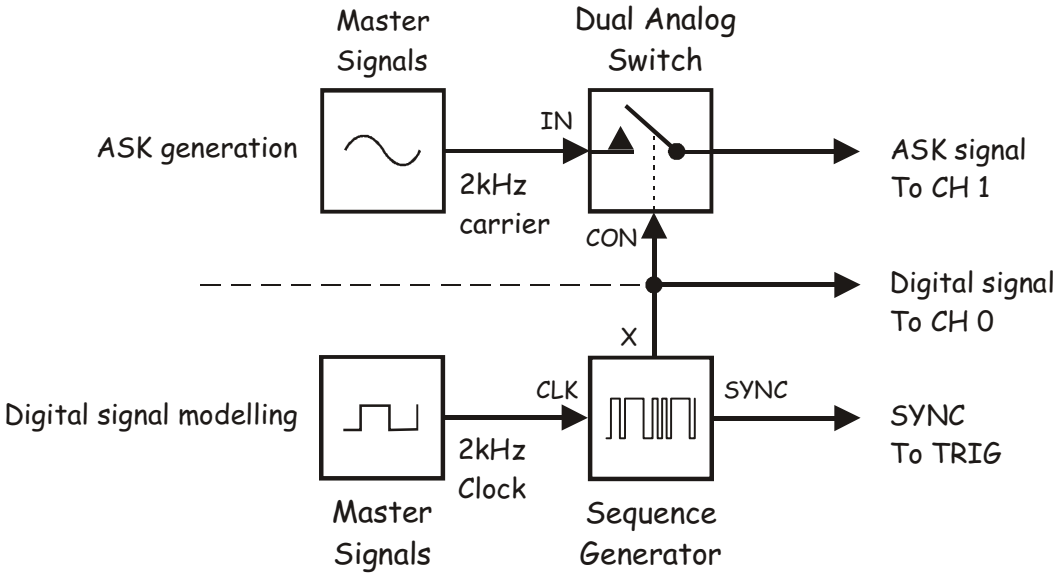

Figure 3

9. Launch and run the NI ELVIS II Oscilloscope VI.

10. Set up the scope per the procedure in Experiment 1 with the following changes:

    - Scale control for Channel 0 to *2V/div* instead of *1V/div*
    - *Input Coupling* controls for both channels to *DC* instead of *AC*
    - *Timebase* control to *1ms/div* instead of *500µs/div*
    - *Trigger Type* control to *Digital* instead of *Edge*

11. Activate the scope's Channel 1 input to observe the Sequence Generator module's output and the ASK signal out of the Dual Analog Switch module.

12. Compare the signals.

Question 1
What is the relationship between the digital signal and the presence of the carrier in the ASK signal?

Question 2
What is the ASK signal's voltage when the digital signal is logic-0?



Ask the instructor to check your work before continuing.

Notice that the ASK signal's carrier and the Sequence Generator module's clock are the same frequency (2kHz). Moreover, notice that they're from the same source – the Master Signals module.

This has been done to make the ASK signal easy to look at on the scope. However, it makes the set-up impractical as a real ASK communications system because the carrier and the data signal's fundamental are too close together in frequency. For reasons explained in Experiment 8 (see pages 8-11 and 8-12), this makes recovering the digital data at the receiver difficult if not impossible.

Ideally, the carrier frequency should be much higher than the bit-rate of the digital signal (which is determined by the Sequence Generator module's clock frequency in this set-up). The next part of the experiment gets you to set the carrier to a more appropriate frequency. In the process, the Dual Analog Switch module's output will look more like a conventional ASK signal.

13. Modify the set-up as shown in Figure 4 below.

    Remember: Dotted lines show leads already in place.

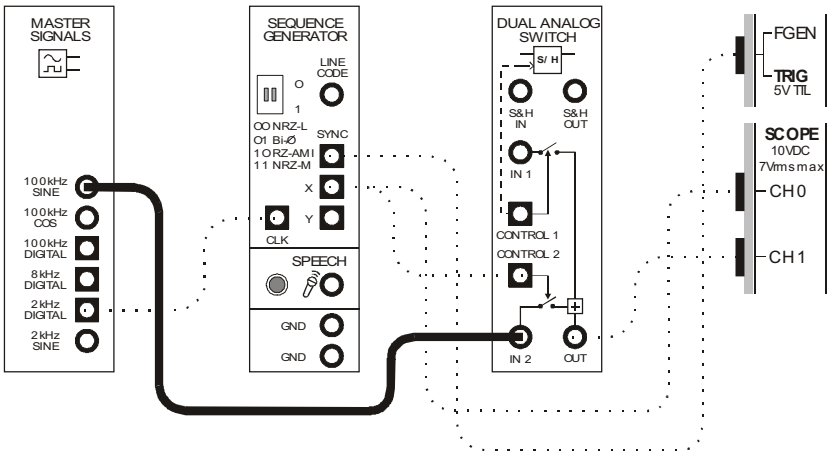

Figure 4

 © 2008 Emona Instruments

This set-up can be represented by the block diagram in Figure 5 below.

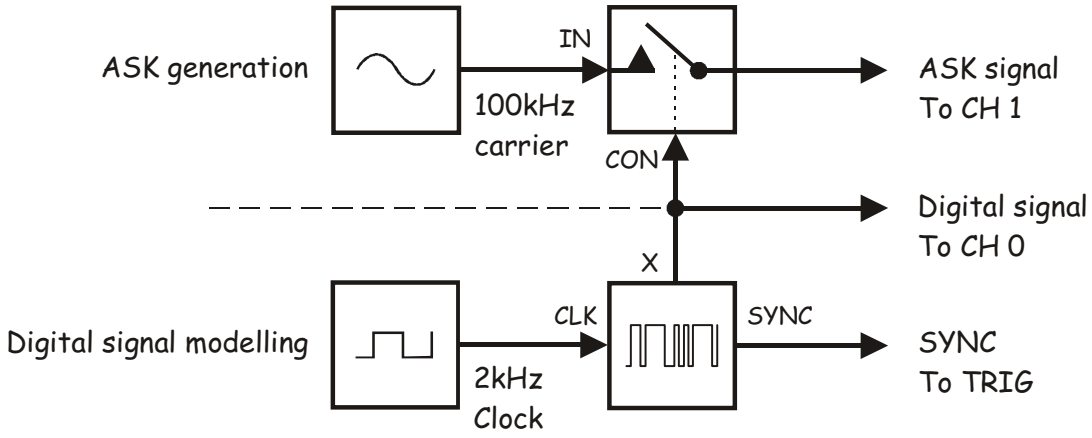

Figure 5

14. Compare the signals.

Question 3
What feature of the ASK signal suggests that it's an AM signal? **Tip:** If you're not sure, see the preliminary discussion.

Ask the instructor to check your work before continuing.

Part B – Demodulating an ASK signal using an envelope detector

As ASK is really just AM (with a digital message instead of speech or music), it can be recovered using any of the AM demodulation schemes. The next part of the experiment lets you do so using an envelope detector.

15. Launch the DATEx soft front-panel (SFP) and check that you have soft control over the DATEx board.

16. Locate the Tuneable Low-pass Filter module on the DATEx SFP and turn its soft *Gain* control fully clockwise.

17. Turn the Tuneable Low-pass Filter module's soft *Cut-off Frequency Adjust* control fully clockwise.

18. Modify the set-up as shown in Figure 6 below.

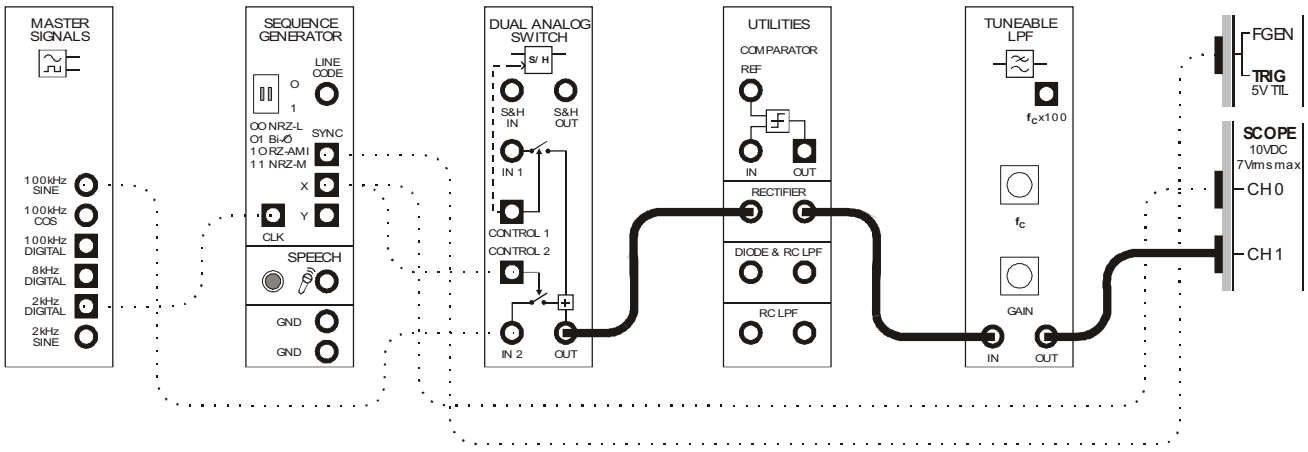

Figure 6

The ASK generation and demodulation parts of the set-up can be represented by the block diagram in Figure 7 on the next page. The rectifier on the Utilities module and the Tuneable Low-pass filter module are used to implement an envelope detector to recover the digital data from the ASK signal.

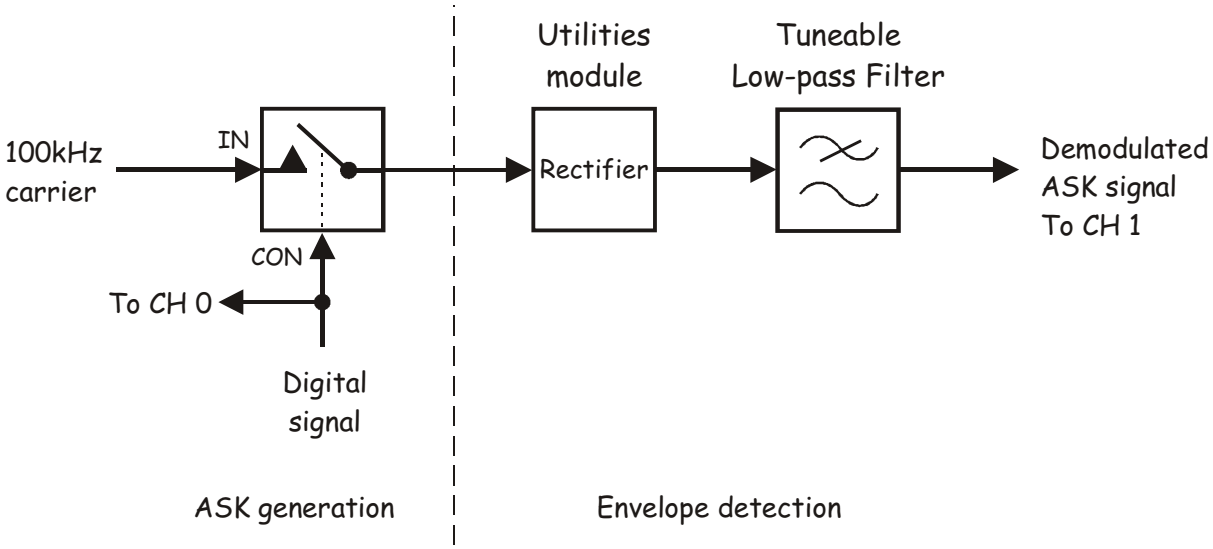

Figure 7

19. Compare the original and recovered digital signals.

Tip: If necessary, adjust the scope's Channel 1 *Scale* control for a better comparison between the signals.

Question 4
Why is the recovered digital signal not a perfect copy of the original?

Question 5
What can be used to "clean-up" the recovered digital signal?

Ask the instructor to check your work before continuing.

Part C – Restoring the recovered digital signal using a comparator

Experiment 16 shows that the comparator is a useful circuit for restoring distorted digital signals. The next part of the experiment lets you use a comparator to clean-up the demodulated ASK signal.

20. Launch and run the NI ELVIS II Variable Power Supplies VI.

21. Set the Variable Power Supplies' positive output to 0V.

22. Modify the set-up as shown in Figure 8 below.

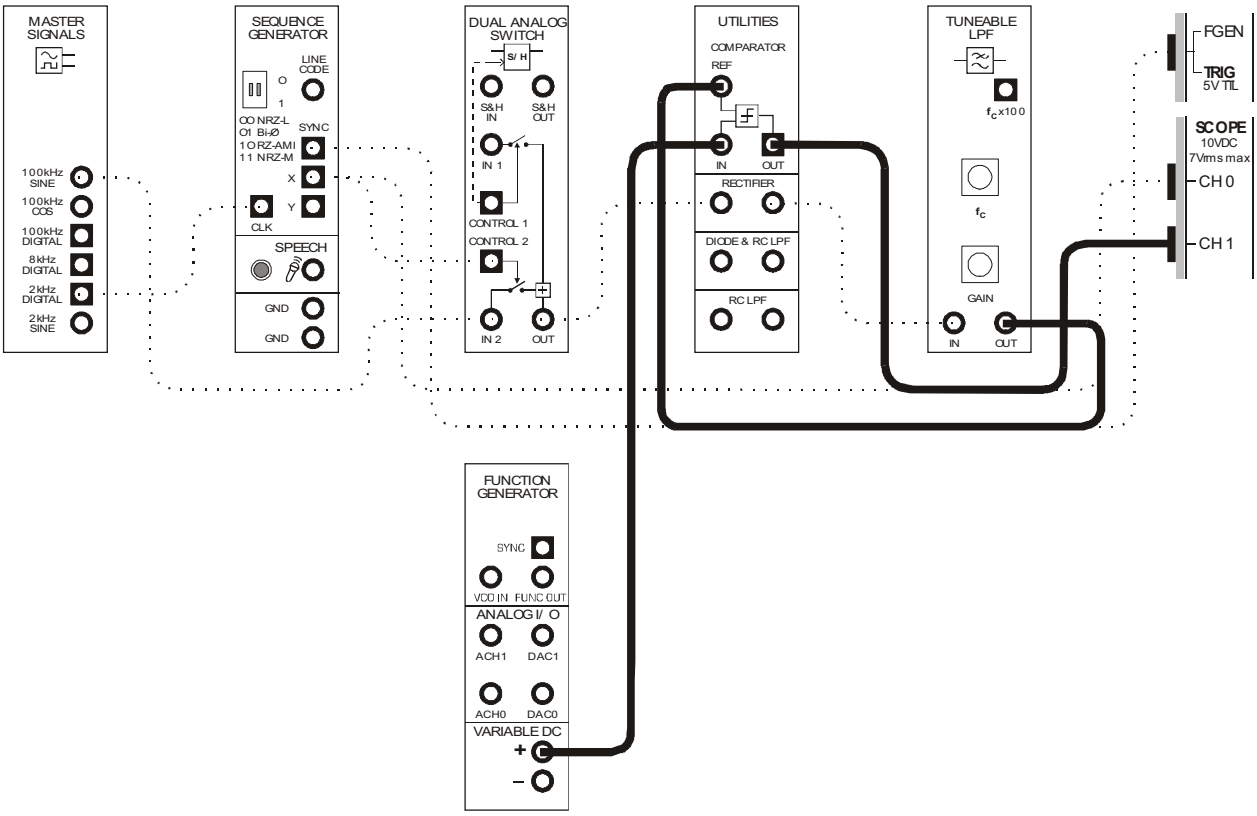

Figure 8

 © 2008 Emona Instruments

The ASK generation, demodulation and digital signal restoration parts of the set-up can be represented by the block diagram in Figure 9 below.

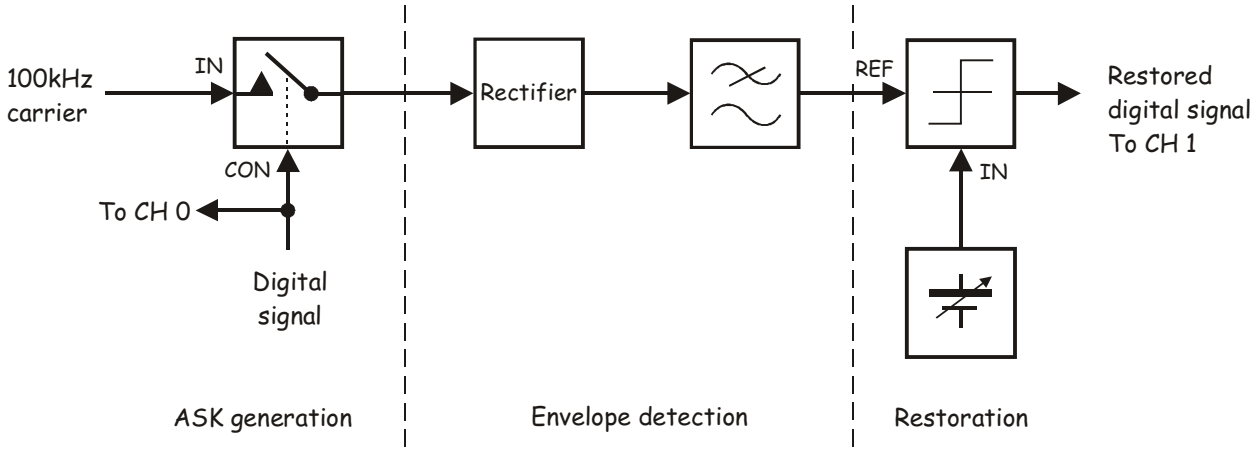

Figure 9

23. Compare the signals. If they're not the same, adjust the Variable Power Supplies positive output soft *Voltage* control until they are.

Question 6
How does the comparator turn the slow rising voltages of the recovered digital signal into sharp transitions?

Ask the instructor to check your work before finishing.

Noise

It's common for radio frequency communications systems to be upset by unwanted electromagnetic radiation called *noise*. Some of this radiation occurs naturally and is generated by the Sun and atmospheric activity such as lightning. Much of the radiation is human-made - either unintentionally (the electromagnetic radiation given off by electrical machines and electronics equipment) or intentionally (other peoples' communication transmissions that we don't want to receive).

Most noise gets added to signals while they're in the channel. This changes the signals' shape which in turn changes how the signals sound when demodulated by the receiver. If the noise is sufficiently large (relative to the size of the signal) the signal can be changed so much that it cannot be demodulated.

It's possible to model noise being added to a signal in the channel of a communications system using the Emona DATEx. If the instructor allows, this activity gets you to do so.

1. Connect the set-up shown in Figure 1 below but **don't** disconnect any of your existing wiring.

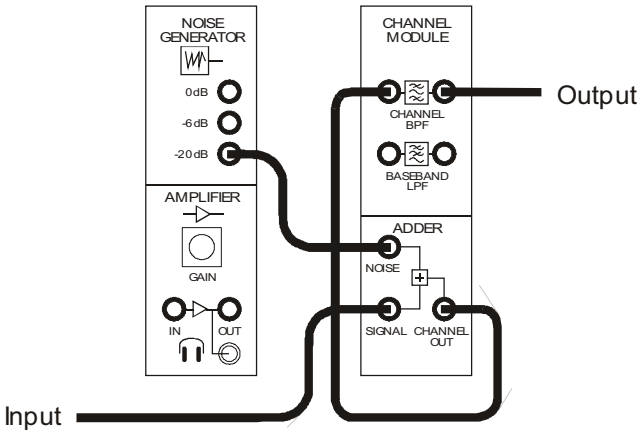

Figure 1

This set-up can be represented by the block diagram in Figure 2 on the next page. It models the behaviour of a real channel by adding noise to communications signals such as ASK.

Usefully, the amount of noise can be varied by selecting either the *-20dB* output (noise is about one-tenth the size of the signal), the *-6dB* output (noise is about half the size of the signal) or the *0dB* output (noise is about the same size as the signal).

 © 2008 Emona Instruments

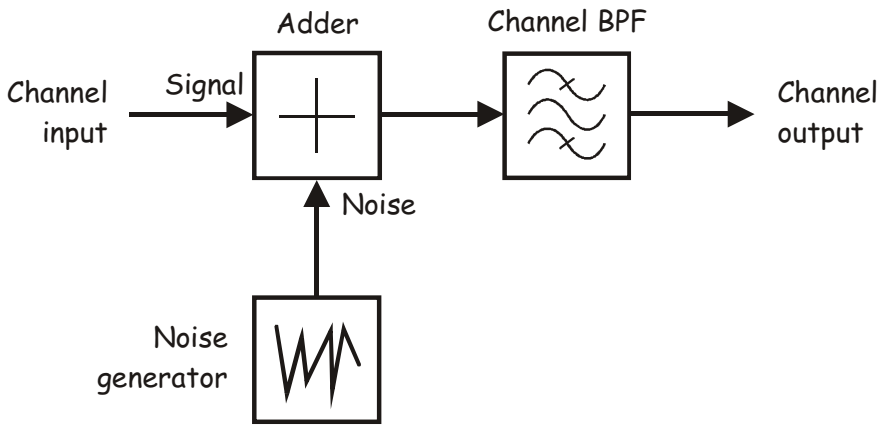

Figure 2

2. Unplug the patch lead to the Dual Analog Switch module's output and connect the noisy channel's input to it.

3. Connect the noisy channel's output to the rectifier's input.

   Note: Once done, the transmitter's signal (the Dual Analog Switch module's output) travels to the receiver's input (the rectifier's input) via the model of a noisy channel.

4. Compare the original and recovered data. If they're not the same, adjust the Variable Power Supplies positive output soft *Voltage* control until they are (with the fewest number of errors).

5. Unplug the scope's Channel 1 input from the comparator's output and connect it to the Adder module's output to observe the noisy ASK signal.

6. Connect the Adder module's *Noise* input to the Noise Generator module's -6dB output to increase the noise in the channel.

7. Observe the effect that this has on the ASK signal.

8. Reconnect the scope's Channel 1 input to the comparator's output.

9. Compare the original and recovered data. If they're not the same, adjust the Variable Power Supplies positive output soft *Voltage* control until they are.

   Note: It may be impossible to recover the data.

Name: _____

Class: _____

18 - Frequency shift keying

Experiment 18 – Frequency Shift Keying

Preliminary discussion

Frequency division multiplexing (FDM) allows a channel to be shared among a set of users. Recall that this is achieved by superimposing the message onto a carrier signal inside the user's allocated portion of the radio-frequency spectrum. Recall also that any of the analog modulation schemes can be used to transmit digital data in this way. When frequency modulation (FM) is used it is known as *binary frequency shift keying* (BFSK or more commonly just FSK).

One of the reasons for using FSK is to take advantage of the relative noise immunity that FM enjoys over AM. Recall that noise manifests itself as variations in the transmitted signal's amplitude. These variations can be removed by FM/FSK receivers (by a circuit called a *limiter*) without adversely affecting the recovered message.

Figure 1 below shows what an FSK signal looks like time-coincident with the digital signal that has been used to generate it.

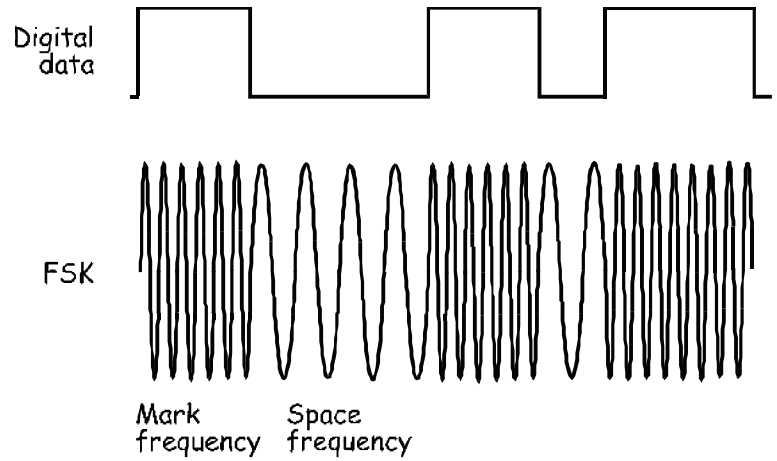

Figure 1

Notice that the FSK signal switches between two frequencies. The frequency of the signal that corresponds with logic-0s in the digital data (called the *space frequency*) is usually lower than the modulator's nominal carrier frequency. The frequency of the signal that corresponds with logic-1s in the digital data (called the *mark frequency*) is usually higher than the modulator's nominal carrier frequency. The modulator doesn't output a signal at the carrier frequency, hence the reference here to it as being the "nominal" carrier frequency.

FSK generation can be handled by conventional FM modulator circuits and the *voltage-controlled oscillator* (VCO) is commonly used. Similarly, FSK demodulation can be handled by conventional FM demodulators such as the *zero crossing detector* (refer to the preliminary discussion of Experiment 12 for an explanation of this circuit's operation) and the *phase-locked loop*. Alternatively, if the FSK signal is passed through a sufficiently selective filter, the two sinewaves that make it up can be individually picked out. Considered on their own, each signal is an ASK signal and so the data can be recovered by passing either one of them through an envelope detector (refer to the preliminary discussion of Experiment 8 for an explanation of the envelope detector's operation).

The experiment

For this experiment you'll use the Emona DATEx to implement the VCO method of generating an FSK signal. Digital data for the message is modelled by the Sequence Generator module. You'll then recover the data by using a filter to pick-out one of the sinewaves in the FSK signal and demodulate it using an envelope detector. Finally, you'll observe the demodulated FSK signal's distortion and use a comparator to restore the data.

It should take you about 40 minutes to complete this experiment.

Equipment

- Personal computer with appropriate software installed
- NI ELVIS II plus USB cable and power pack
- Emona DATEx experimental add-in module
- Three BNC to 2mm banana-plug leads
- Assorted 2mm banana-plug patch leads

 © 2008 Emona Instruments

Procedure

Part A – Generating an FSK signal

1. Ensure that the NI ELVIS II power switch at the back of the unit is off.

2. Carefully plug the Emona DATEx experimental add-in module into the NI ELVIS II.

3. Set the *Control Mode* switch on the DATEx module (top right corner) to *PC Control*.

4. Connect the NI ELVIS II to the PC using the USB cable.

   Note: This may already have been done for you.

5. Turn on the NI ELVIS II power switch at the rear of the unit then turn on its *Prototyping Board Power* switch at the top right corner near the power indicator.

6. Turn on the PC and let it boot-up.

7. Launch the NI ELVISmx software.

8. Launch and run the NI ELVIS II Function Generator VI.

9. Adjust the function generator using its soft controls for an output with the following specifications:

   - Waveshape: Sine
   - Frequency: 10kHz
   - Amplitude: 4Vpp
   - DC Offset: 0V
   - Modulation Type: FM

10. Connect the set-up shown in Figure 2 below.

Note: Insert the black plugs of the oscilloscope leads into a ground (*GND*) socket.

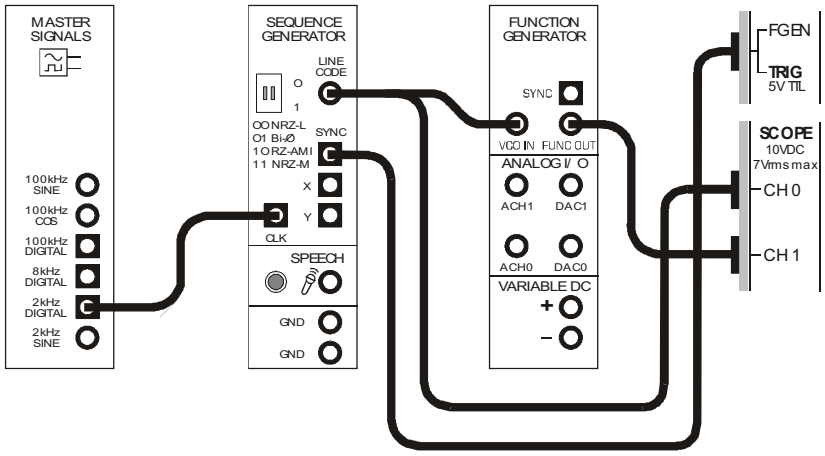

Figure 2

This set-up can be represented by the block diagram in Figure 3 below. The Sequence Generator module is used to model a digital signal and its SYNC output is used to trigger the scope to provide a stable display. The function generator's VCO facility is used to generate the FSK signal.

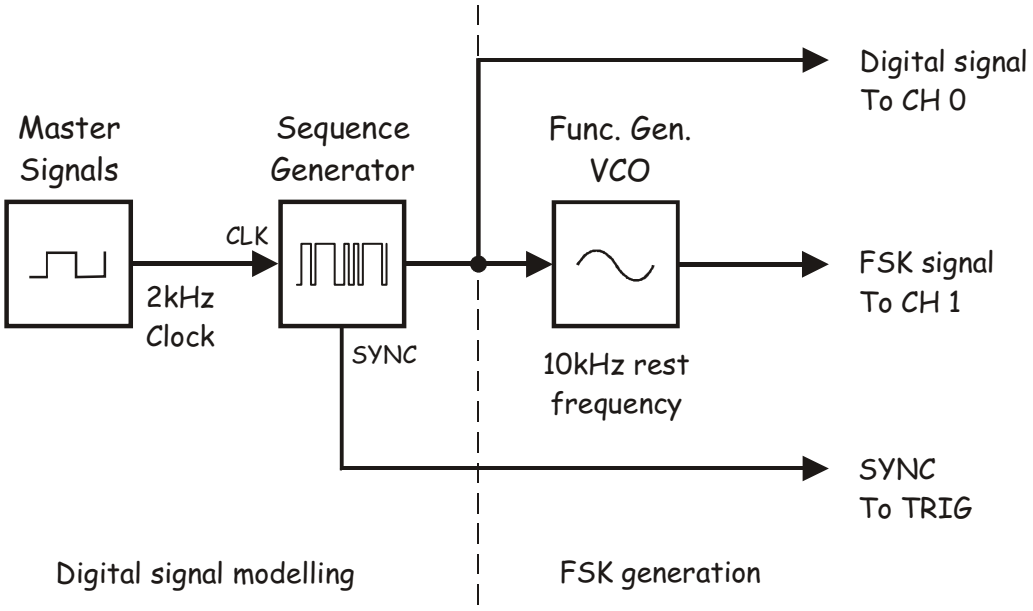

Figure 3

 © 2008 Emona Instruments

11. Launch the DATEx soft front-panel (SFP) and check that you have soft control over the DATEx board.

12. Locate the Sequence Generator module on the DATEx SFP and set its soft dip-switches to 00.

13. Launch and run the NI ELVIS II Oscilloscope VI.

14. Set up the scope per the procedure in Experiment 1 with the following change:

    - *Trigger Type* control to *Digital*

15. Activate the scope's Channel 1 input to observe the Sequence Generator module's output and the FSK signal out of the VCO.

    Note: Ensure that the scope's *Timebase* control is set to the *500µs/div* position.

16. Compare the signals.

Question 1
What's the name for the VCO output frequency that corresponds with logic-1s in the digital data? **Tip:** If you're not sure, see the preliminary discussion.

Question 2
What's the name for the VCO output frequency that corresponds with logic-0s in the digital data?

Question 3
Based on your observations of the FSK signal, which of the two is the higher frequency? Explain your answer.



Ask the instructor to check your work before continuing.

© 2008 Emona Instruments

Part B – Demodulating an FSK signal using filtering and an envelope detector

As FSK is really just FM (with a digital message instead of speech or music), it can be recovered using any of the FM demodulation schemes. However, as the FSK signal switches back and forth between just two frequencies we can use a method of demodulating it that cannot be used to demodulate speech-encoded FM signals. The next part of the experiment lets you do this.

17. Locate the Tuneable Low-pass Filter module on the DATEx SFP and turn its soft *Cut-off Frequency Adjust* control fully clockwise.

18. Turn the Tuneable Low-pass Filter module's soft *Gain* control fully clockwise.

19. Modify the set-up as shown in Figure 4 below.

    Note: Remember that the dotted lines show leads already in place.

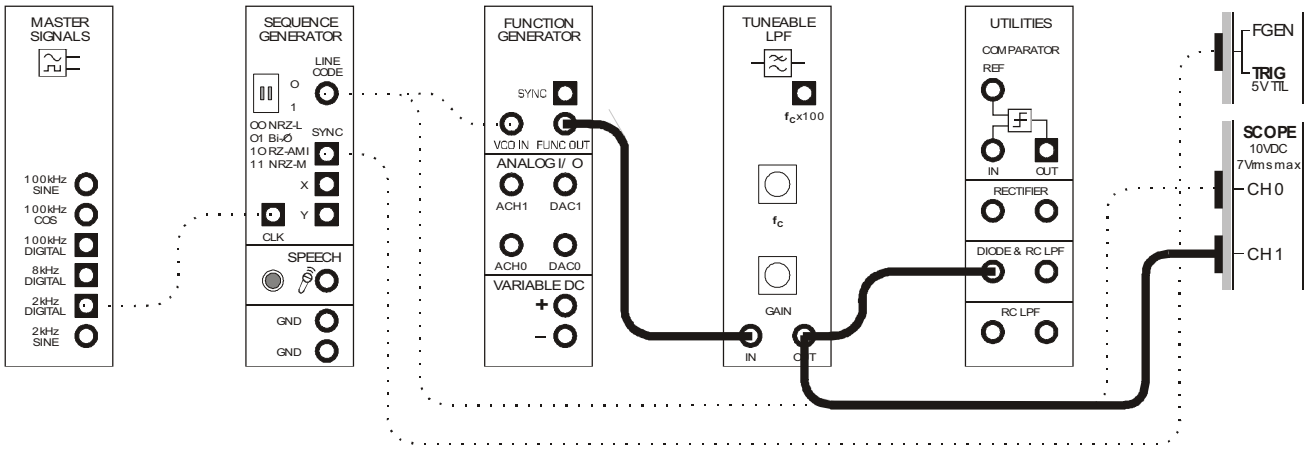

Figure 4

The FSK generation and demodulation parts of the set-up can be represented by the block diagram in Figure 5 on the next page. The Tuneable Low-pass Filter module is used to pick out one of the FSK signal's two sinewaves and the DIODE and RC LPF on the Utilities module form the envelope detector to complete the FSK signal's demodulation.

 © 2008 Emona Instruments

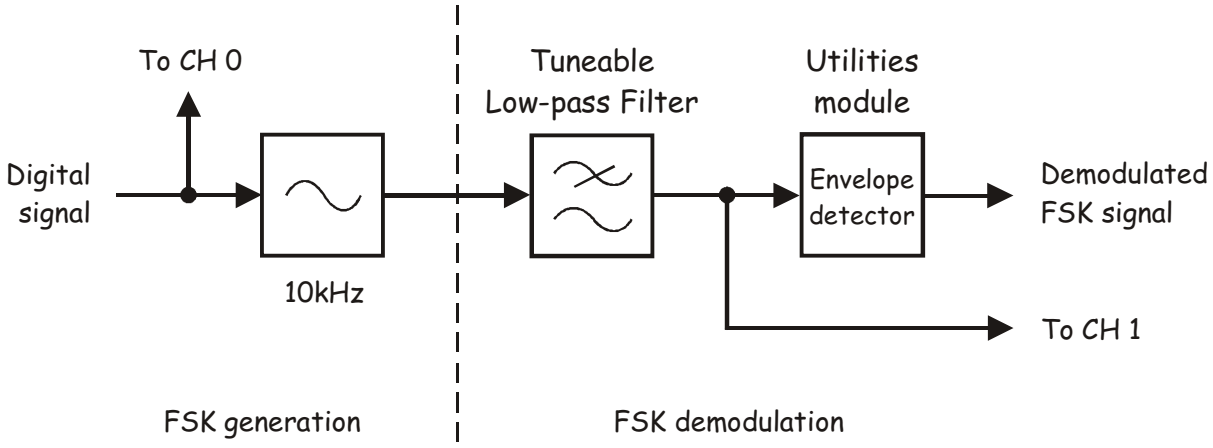

Figure 5

20. Slowly turn the Tuneable Low-pass Filter module's soft *Gain* control *Cut-off Frequency Adjust* control anti-clockwise until the higher (mark) frequency is reduced to zero but with the lower (space) frequency unaffected.

21. Compare the digital signal and the filter's output.

Question 4
Which of the FSK signal's two sinewaves is the filter letting through?

Question 5
What does the filtered FSK signal now look like?

Ask the instructor to check your work before continuing.

22. Modify the set-up by connecting the scope's Channel 1 input to the envelope detector's output as shown in Figure 6 below.

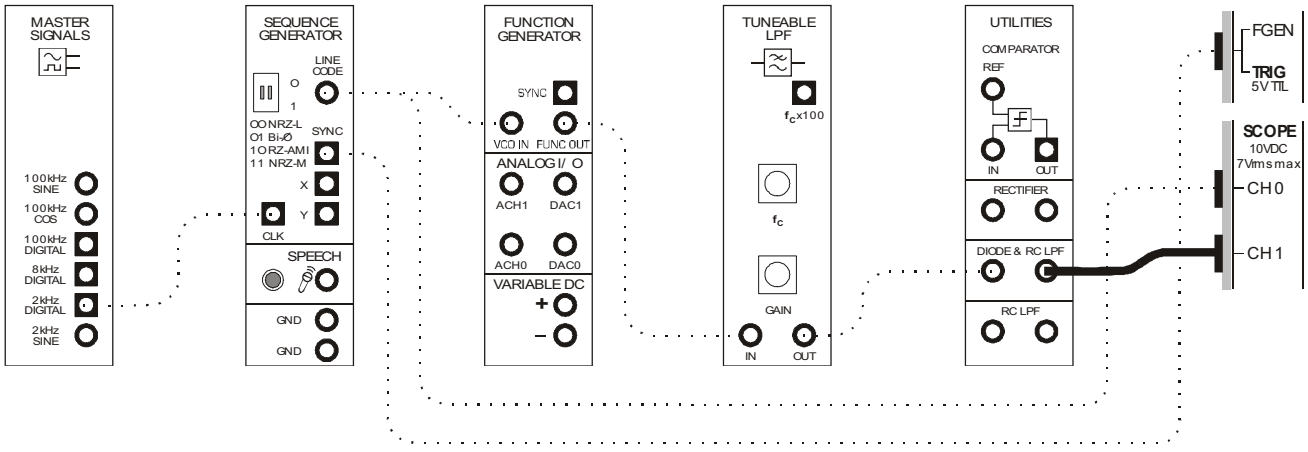

Figure 6

23. Compare the original digital signal with the recovered digital signal.

Question 6
What can be used to "clean-up" the recovered digital signal?

Ask the instructor to check your work before continuing.

 © 2008 Emona Instruments

Part C – Restoring the recovered data using a comparator

Experiment 16 shows that the comparator is a useful circuit for restoring distorted digital signals. The next part of the experiment lets you use a comparator to clean-up the demodulated FSK signal.

24. Launch and run the NI ELVIS II Variable Power Supplies VI.

25. Set the Variable Power Supplies' positive output to 0V.

26. Modify the set-up as shown in Figure 7 below.

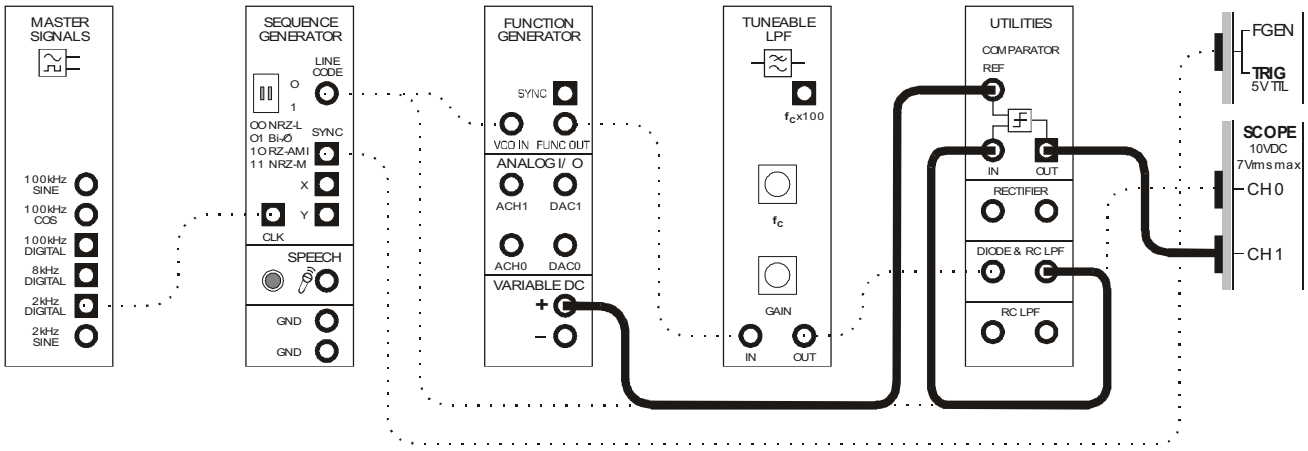

Figure 7

The FSK generation, demodulation and digital signal restoration parts of the set-up can be represented by the block diagram in Figure 8 below.

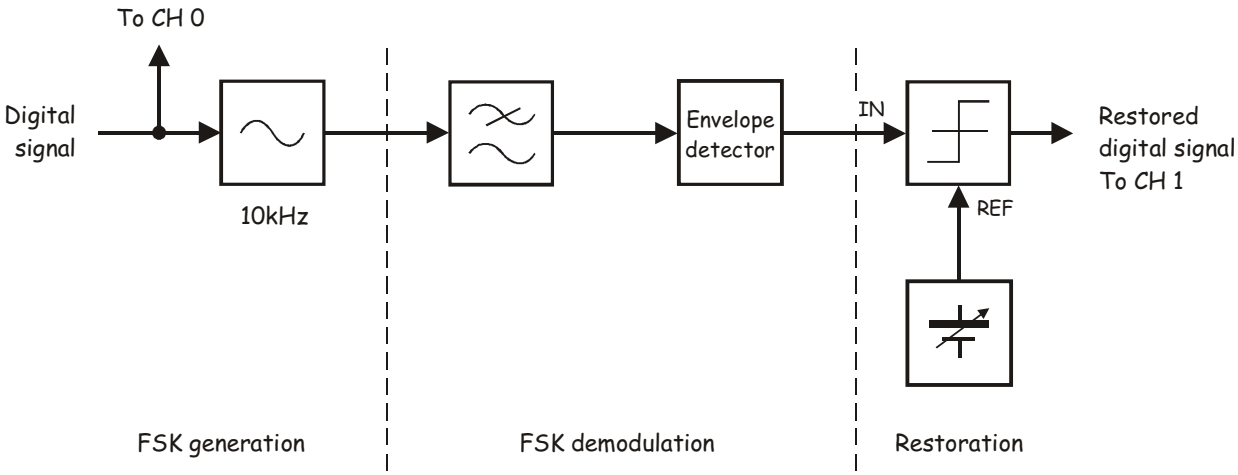

Figure 8

27. Compare the signals. If they're not the same, adjust the Variable Power Supplies positive output soft *Voltage* control until they are.

    Note: This will require fine adjustment of the reference voltage close to zero volts.

Question 7

How does the comparator turn the slow-rising voltages of the recovered digital signal into sharp transitions?

Ask the instructor to check your work before finishing.

 © 2008 Emona Instruments

Name: _____

Class: _____

19 - Binary phase shift keying

Experiment 19 – Binary Phase Shift Keying

Preliminary discussion

Experiments 17 and 18 show that the AM and FM modulation schemes can be used to transmit digital signals and this allows for the channel to be shared. As digital data forms the message instead of speech and music, it is preferred that these two systems are called ASK and FSK instead.

Recall that ASK uses the digital data's 1s and 0s to switch a carrier between two amplitudes. FSK uses the 1s and 0s to switch a carrier between two frequencies. An alternative to these two methods is to use the data stream's 1s and 0s to switch the carrier between two phases. This is called *Binary Phase Shift Keying* (BPSK). Figure 1 below shows what a BPSK signal looks like time-coincident with the digital signal that has been used to generate it.

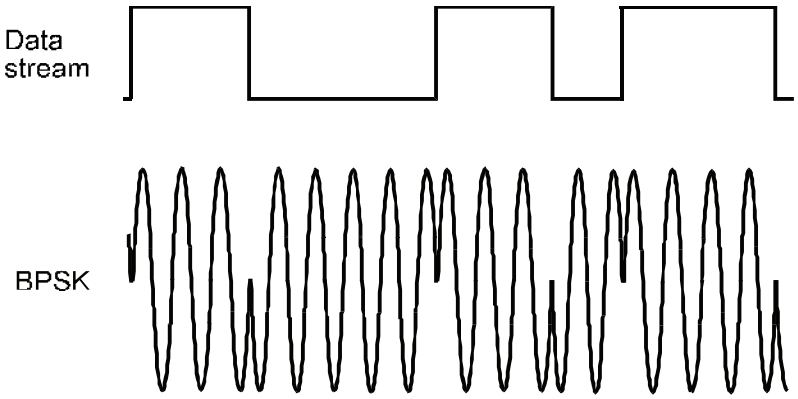

Figure 1

Notice that, when the change in logic level causes the BPSK signal's phase to change, it does so by 180°. For example, where the signal is travelling towards a positive peak the change in logic level causes it to reverse direction and head back toward the negative peak (and vice versa).

You may find it difficult to see at first but look closely and you'll notice that alternating halves of the BPSK signal's envelopes have the same shape as the message. This indicates that BPSK is actually *double-sideband suppressed carrier* (DSBSC) modulation. That being the case, BPSK generation and the recovery of the data can be handled by conventional DSBSC modulation and demodulation techniques (explained in Experiments 6 and 9 respectively).

With a choice of ASK, FSK and BPSK you might be wondering about which system you'll most likely see. All other things being equal, BPSK is the best performing system in terms of its ability to ignore noise and so it produces the fewest errors at the receiver. FM is the next best and AM is the worst. On that basis, you'd expect that BPSK is the preferred system. However, it's not necessarily the easiest to implement and so in some situations FSK or ASK might be used as they are cheaper to implement. In fact, FSK was used for cheaper dial-up modems.

The experiment
For this experiment you'll use the Emona DATEx to generate a BPSK signal using the Multiplier module to implement its mathematical model. Digital data for the message is modelled by the Sequence Generator module. You'll then recover the data using another Multiplier module and observe its distortion. Finally, you'll use a comparator to restore the data.

It should take you about 40 minutes to complete this experiment.

Equipment

- Personal computer with appropriate software installed
- NI ELVIS II plus USB cable and power pack
- Emona DATEx experimental add-in module
- Three BNC to 2mm banana-plug leads
- Assorted 2mm banana-plug patch leads

Procedure

Part A – Generating a BPSK signal
A BPSK signal will be generated by implementing the mathematical model for DSBSC modulation. For more information on this, refer to the preliminary discussion of Experiment 6.

1. Ensure that the NI ELVIS II power switch at the back of the unit is off.

2. Carefully plug the Emona DATEx experimental add-in module into the NI ELVIS II.

3. Set the *Control Mode* switch on the DATEx module (top right corner) to *PC Control*.

4. Connect the NI ELVIS II to the PC using the USB cable.

   Note: This may already have been done for you.

5. Turn on the NI ELVIS II power switch at the rear of the unit then turn on its *Prototyping Board Power* switch at the top right corner near the power indicator.

6. Turn on the PC and let it boot-up.

7. Launch the NI ELVISmx software.

8. Launch the DATEx soft front-panel (SFP) and check that you have soft control over the DATEx board.

9. Locate the Sequence Generator module on the DATEx SFP and set its soft dip-switches to 00.

10. Connect the set-up shown in Figure 2 below.

    Note: Insert the black plugs of the oscilloscope leads into a ground (*GND*) socket.

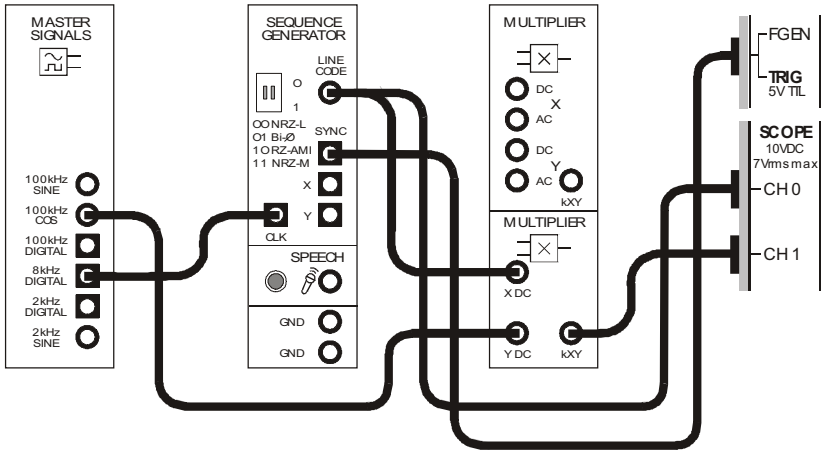

Figure 2

This set-up can be represented by the block diagram in Figure 3 on the next page. The Sequence Generator module is used to model a digital signal and its SYNC output is used to trigger the scope to provide a stable display. The Multiplier module is used to generate the BPSK signal by implementing its mathematical model.

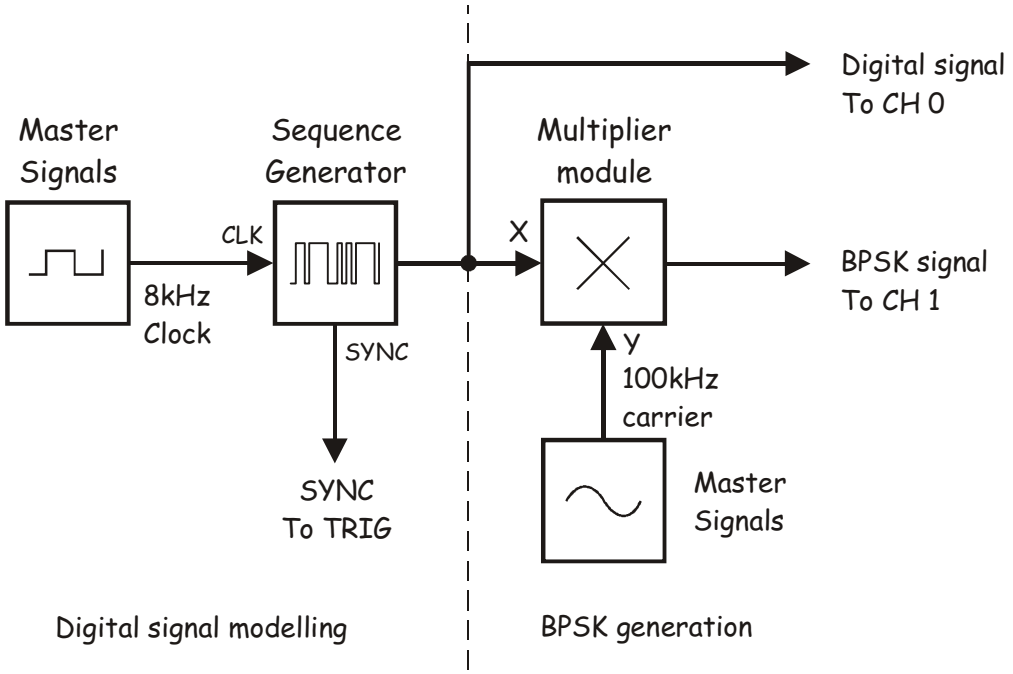

Figure 3

11. Launch and run the NI ELVIS II Oscilloscope VI.

12. Set up the scope per the procedure in Experiment 1 with the following changes:

    - *Scale* control for Channel 1 to *2V/div* instead of *1V/div*
    - *Input Coupling* controls for both channels to *DC* instead of *AC*
    - *Timebase* control to *100µs/div* instead of *500µs/div*
    - *Trigger Type* control to *Digital* instead of *Edge*

13. Activate the scope's Channel 1 input to observe the Sequence Generator module's output and the BPSK signal out of the Multiplier module.

14. Compare the signals.

Question 1

What feature of the BPSK signal suggests that it's a DSBSC signal? **Tip:** If you're not sure, see the preliminary discussion.

 © 2008 Emona Instruments

It's clear that something happens when the Sequence Generator' module's output changes logic level but it's difficult to see exactly what it is at this resolution. The next few steps allow you to get a better look.

15. Modify the set-up as shown in Figure 4 below.

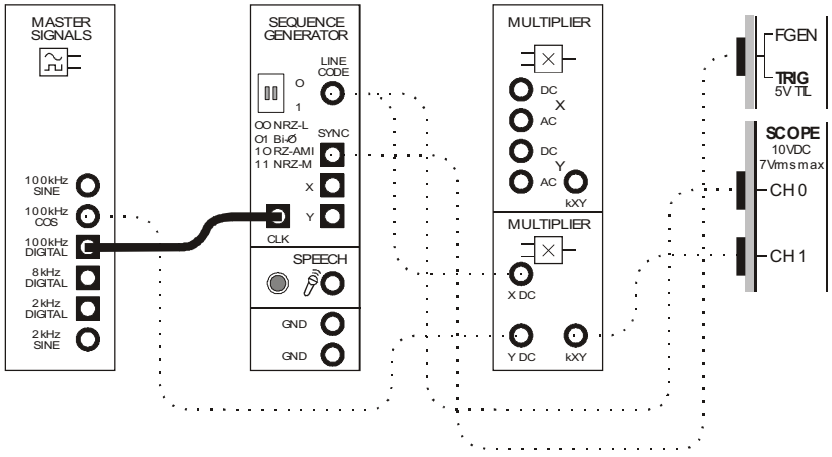

Figure 4

16. Set the scope's *Timebase* control to the *10µs/div* position.

Note: The NI ELVIS II is being operated at close to the limits of its specifications and so the Master Signals module's *100kHz COS* output looks a little triangular. However, the display is sufficient to see what occurs when the Sequence Generator module's output changes logic level.

Question 2
What happens to the BPSK signal on the data stream's logic transitions?

Ask the instructor to check your work before continuing.

Part B – Demodulating a BPSK signal using a product detector

As BPSK is really just DSBSC (with a digital message instead of speech or music), it can be recovered using any of the DSBSC demodulation schemes. The next part of the experiment lets you do so using a product detector.

17. Return the Sequence Generator module's *CLK* input to the Master Signals module's *8kHz Digital* output.

18. Set the scope's *Timebase* control to the *200µs/div* position.

19. Locate the Tuneable Low-pass Filter module on the DATEx SFP and turn its soft *Cut-off Frequency Adjust* control fully clockwise.

20. Set the Tuneable Low-pass Filter module's soft *Gain* control to about the middle of its travel.

21. Modify the set-up as shown in Figure 5 below.

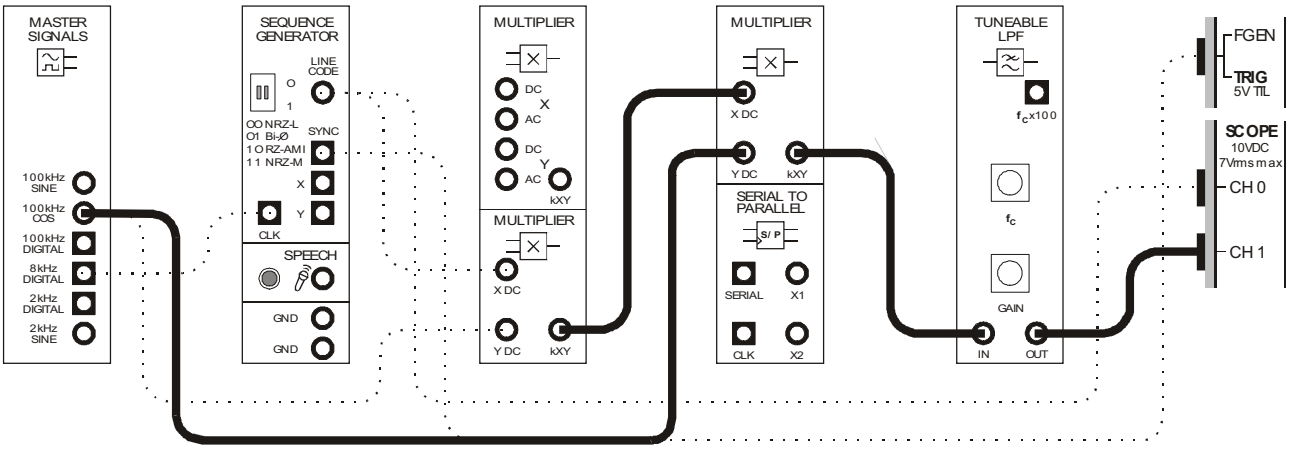

Figure 5

The BPSK generation and demodulation parts of the set-up can be represented by the block diagram in Figure 6 on the next page. The second Multiplier and the Tuneable Low-pass filter module are used to implement a product detector to recover the digital data from the BPSK signal.

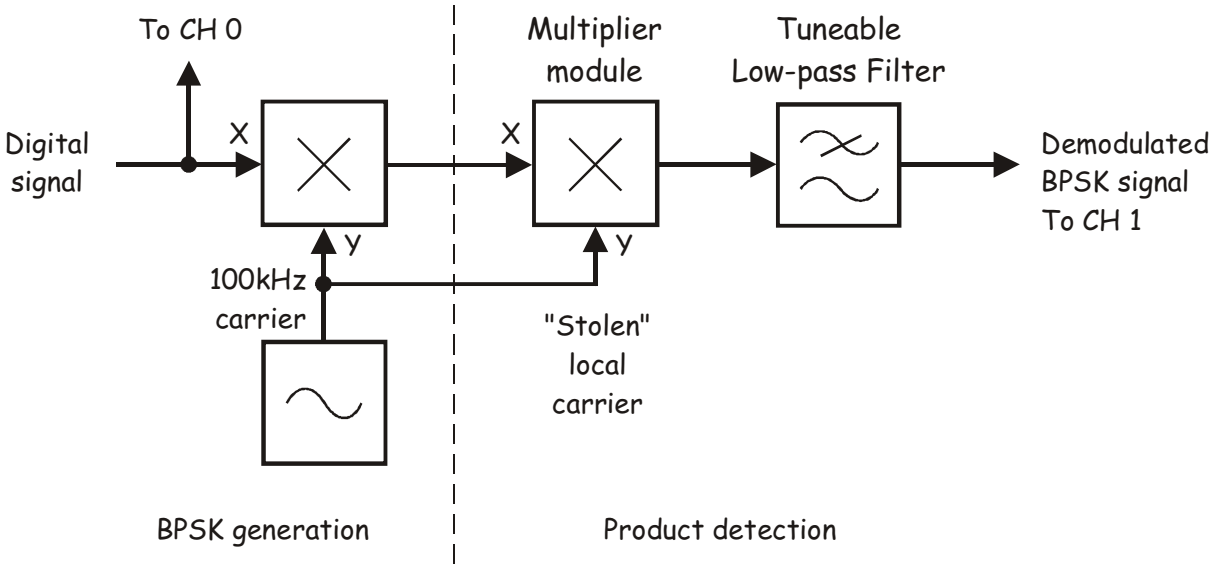

Figure 6

22. Compare the digital signal with the recovered digital signal.

Question 3
Why is the recovered digital signal not a perfect copy of the original?

Question 4
What can be used to "clean-up" the recovered digital signal?

Ask the instructor to check your work before continuing.

Part C – Restoring the recovered data using a comparator

Experiment 16 shows that the comparator is a useful circuit for restoring distorted digital signals. The next part of the experiment lets you use a comparator to clean-up the demodulated BPSK signal.

23. Launch and run the NI ELVIS II Variable Power Supplies VI.

24. Set the Variable Power Supplies' positive output to 0V.

25. Modify the set-up as shown in Figure 7 below.

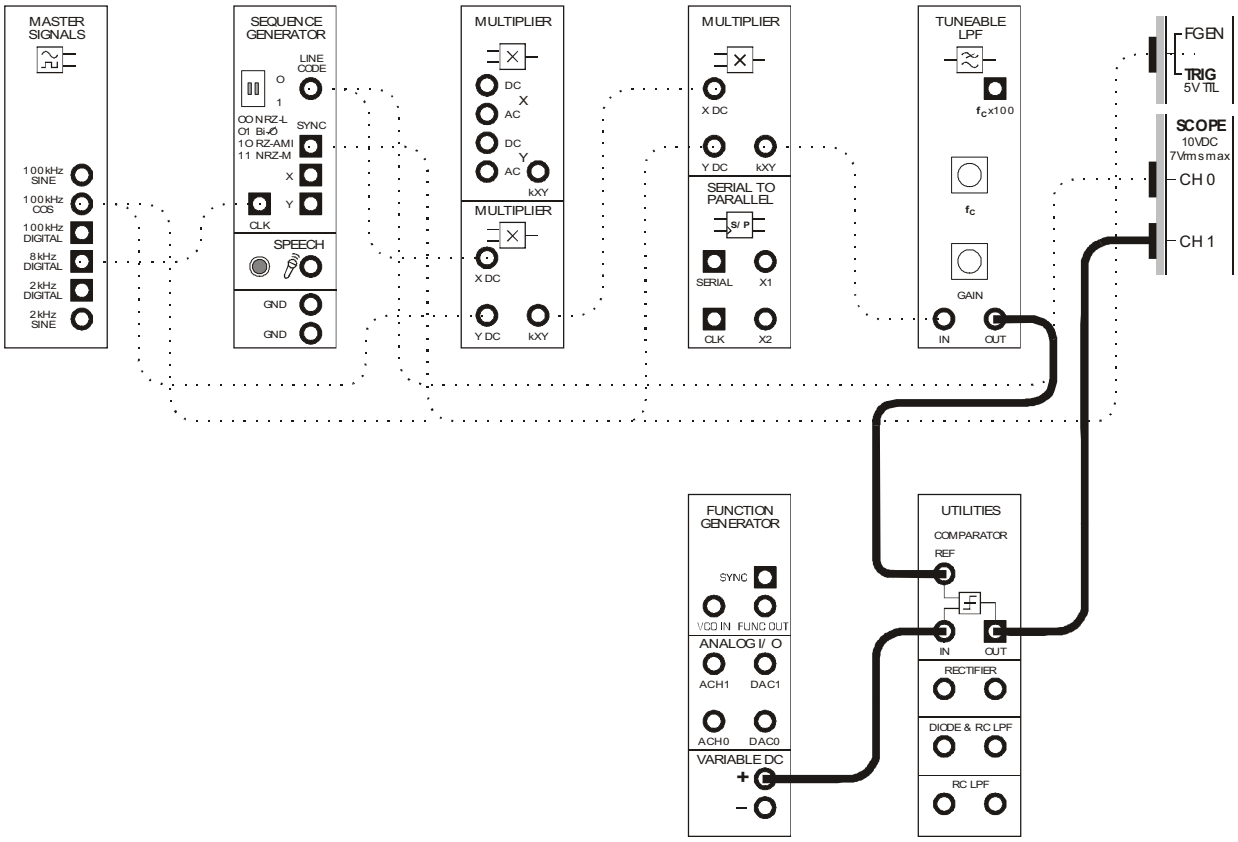

Figure 7

 © 2008 Emona Instruments

The BPSK generation, demodulation and digital signal restoration parts of the set-up can be represented by the block diagram in Figure 8 below.

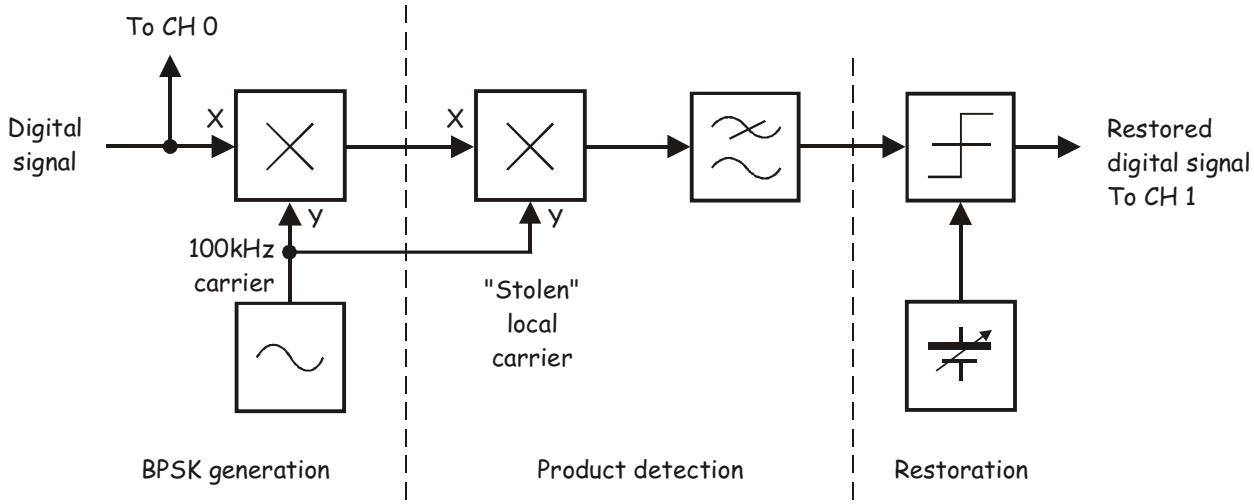

Figure 8

26. Compare the signals. If they're not the same, adjust the Variable Power Supplies positive output soft *Voltage* control until they are.



Ask the instructor to check your work before finishing.

Noise

It's common for radio frequency communications systems to be upset by unwanted electromagnetic radiation called *noise*. Some of this radiation occurs naturally and is generated by the Sun and atmospheric activity such as lightning. Much of the radiation is human-made - either unintentionally (the electromagnetic radiation given off by electrical machines and electronics equipment) or intentionally (other peoples' communication transmissions that we don't want to receive).

Most noise gets added to signals while they're in the channel. This changes the signals' shape which in turn changes how the signals sound when demodulated by the receiver. If the noise is sufficiently large (relative to the size of the signal) the signal can be changed so much that it cannot be demodulated.

It's possible to model noise being added to a signal in the channel of a communications system using the Emona DATEx. If the instructor allows, this activity gets you to do so.

1. Connect the set-up shown in Figure 1 below but **don't** disconnect any of your existing wiring.

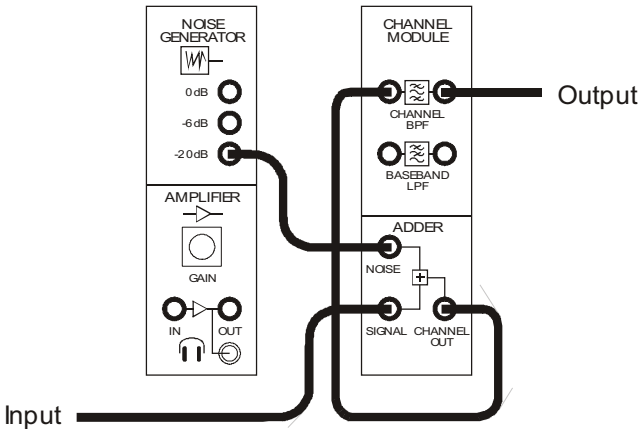

Figure 1

This set-up can be represented by the block diagram in Figure 2 on the next page. It models the behaviour of a real channel by adding noise to communications signals such as BPSK.

Usefully, the amount of noise can be varied by selecting either the *-20dB* output (noise is about one-tenth the size of the signal), the *-6dB* output (noise is about half the size of the signal) or the *0dB* output (noise is about the same size as the signal).

 © 2008 Emona Instruments

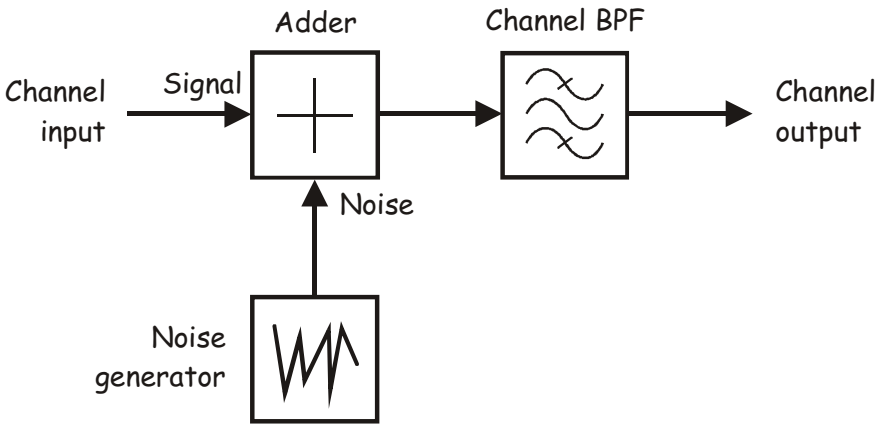

Figure 2

2. Unplug the patch lead to the output of the Multiplier module on the upper-half of the DATEx and connect the noisy channel's input to it.

3. Connect the noisy channel's output to the input of the Multiplier module in the lower-half of the DATEx.

   Note: Once done, the transmitter's signal (the upper Multiplier module's output) travels to the receiver's input (the lower Multiplier module's input) via the model of a noisy channel.

4. Compare the original and recovered data. If they're not the same, adjust the Variable Power Supplies positive output soft *Voltage* control until they are.

5. Unplug the scope's Channel 1 input from the comparator's output and connect it to the Adder module's output to observe the noisy BPSK signal.

6. Connect the Adder module's *Noise* input to the Noise Generator module's -6dB output to increase the noise in the channel.

7. Observe the effect that this has on the BPSK signal.

8. Reconnect the scope's Channel 1 input to the comparator's output.

9. Compare the original and recovered data. If they're not the same, adjust the Variable Power Supplies positive output soft *Voltage* control until they are.

10. Repeat for the Noise Generator module's *0dB* output.

    Note: It may be impossible to recover the data.

Name: _____

Class: _____

20 - Quadrature phase shift keying

Experiment 20 – Quadrature Phase Shift Keying

Preliminary discussion

As its name implies, *quadrature phase shift keying* (QPSK) is a variation of binary phase shift keying (BPSK). Recall that BPSK is basically a DSBSC modulation scheme with digital information for the message. Importantly though, the digital information is sent one bit at a time. QPSK is a DSBSC modulation scheme also but it sends two bits of digital information a time (without the use of another carrier frequency).

As QPSK sends two bits of data at a time, it's tempting to think that QPSK is twice as fast as BPSK but this is not so. Converting the digital data from a series of individual bits to a series of bit-pairs necessarily halves the data's bit-rate. This cancels the speed advantage of sending two bits at a time.

So why bother with QPSK? Well, halving the data bit rate does have one significant advantage. The amount of the radio-frequency spectrum required to transmit QPSK reliably is half that required for BPSK signals. This in turn makes room for more users on the channel.

Figure 1 below shows the block diagram of the mathematical implementation of QPSK.

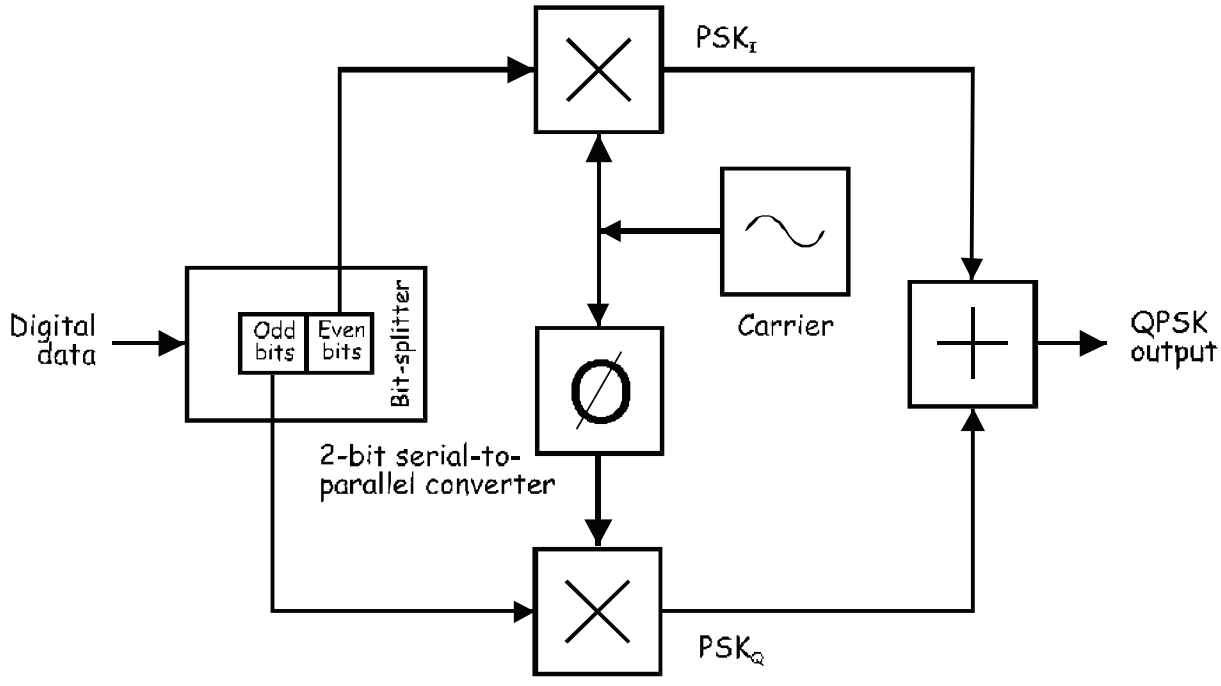

Figure 1

At the input to the modulator, the digital data's even bits (that is, bits 0, 2, 4 and so on) are stripped from the data stream by a "bit-splitter" and are multiplied with a carrier to generate a BPSK signal (called PSK_I). At the same time, the data's odd bits (that is, bits 1, 3, 5 and so on) are stripped from the data stream and are multiplied with the same carrier to generate a second BPSK signal (called PSK_Q). However, the PSK_Q signal's carrier is phase-shifted by 90° before being modulated. This is the secret to QPSK operation.

The two BPSK signals are then simply added together for transmission and, as they have the same carrier frequency, they occupy the same portion of the radio-frequency spectrum. While this suggests that the two sets of signals would be irretrievably mixed, the required 90° of phase separation between the carriers allows the sidebands to be separated by the receiver using phase discrimination (introduced in Experiment 8).

Figure 2 below shows the block diagram of the mathematical implementation of QPSK demodulation.

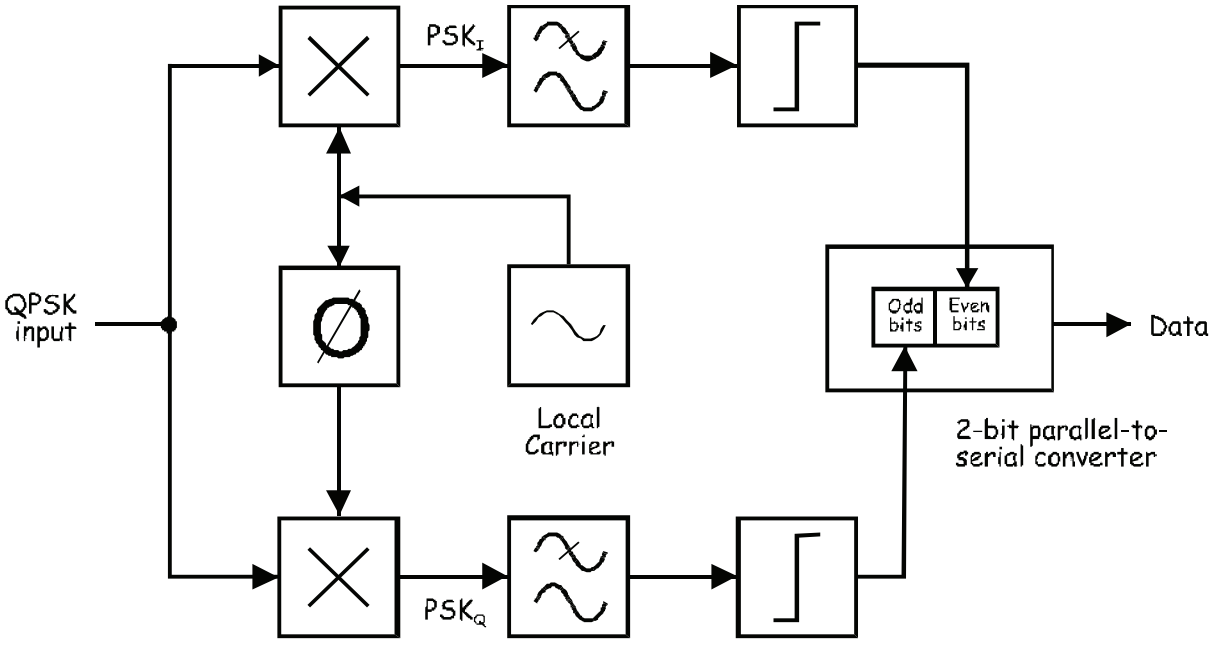

Figure 2

Notice the arrangement uses two product detectors to simultaneously demodulate the two BPSK signals. This simultaneously recovers the pairs of bits in the original data. The two signals are cleaned-up using a comparator or some other signal conditioner then the bits are put back in order using a 2-bit parallel-to-serial converter.

To understand how each detector picks out only one of the BPSK signals and not both of them, recall that the product detection of DSBSC signals is "phase sensitive". That is, recovery of the message is optimal if the transmitted and local carriers are in phase with each another. But the recovered message is attenuated if the two carriers are not exactly in phase. Importantly, if the phase error is 90° the amplitude of the recovered message is zero. In other words, the message is completely rejected (this issue is discussed in Part E of Experiment 9).

The QPSK demodulator takes advantage of this fact. Notice that the product detectors in Figure 2 share the carrier but one of them is phase shifted 90°. That being the case, once the phase of the local carrier for one of the product detectors matches the phase of the transmission carrier for one of the BPSK signals, there is automatically a 90° phase error between that detector's local carrier and the transmission carrier of the other BPSK signal. So, the detector recovers the data on the BPSK signal that it's matched to and rejects the other BPSK signal.

The experiment

For this experiment you'll use the Emona DATEx to generate a QPSK signal by implementing the mathematical model of QPSK. Once generated, you'll examine the QPSK signal using the scope. Then, you'll examine how phase discrimination using a product detector can be used to pick-out the data on one BPSK signal or the other.

It should take you about 1 hour to complete this experiment.

Equipment

- Personal computer with appropriate software installed
- NI ELVIS II plus USB cable and power pack
- Emona DATEx experimental add-in module
- Three BNC to 2mm banana-plug leads
- Assorted 2mm banana-plug patch leads

Procedure

Part A – Generating a QPSK signal

1. Ensure that the NI ELVIS II power switch at the back of the unit is off.

2. Carefully plug the Emona DATEx experimental add-in module into the NI ELVIS II.

3. Set the *Control Mode* switch on the DATEx module (top right corner) to *PC Control*.

4. Connect the NI ELVIS II to the PC using the USB cable.

   Note: This may already have been done for you.

5. Turn on the NI ELVIS II power switch at the rear of the unit then turn on its *Prototyping Board Power* switch at the top right corner near the power indicator.

6. Turn on the PC and let it boot-up.

7. Launch the NI ELVISmx software.

8. Connect the set-up shown in Figure 3 below.

Note: Insert the black plugs of the oscilloscope leads into a ground (*GND*) socket.

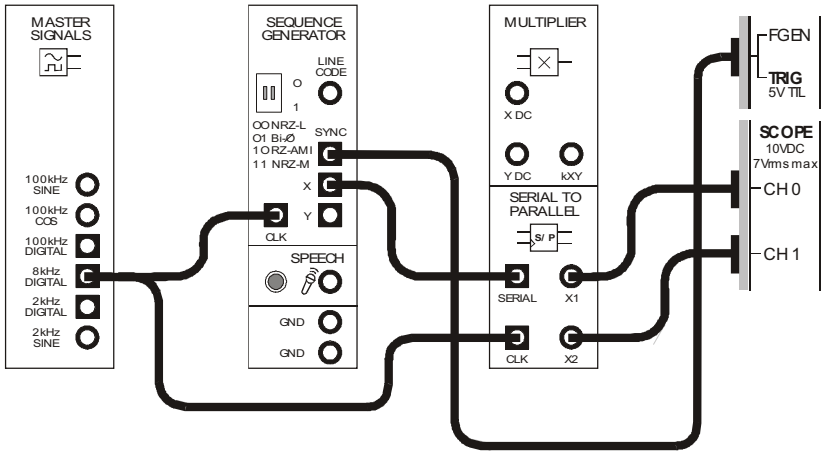

Figure 3

This set-up can be represented by the block diagram in Figure 4 below. The Sequence Generator module is used to model digital data. The 2-bit Serial-to-Parallel Converter module is used to split the data bits up into a stream of even bit and odd bits.

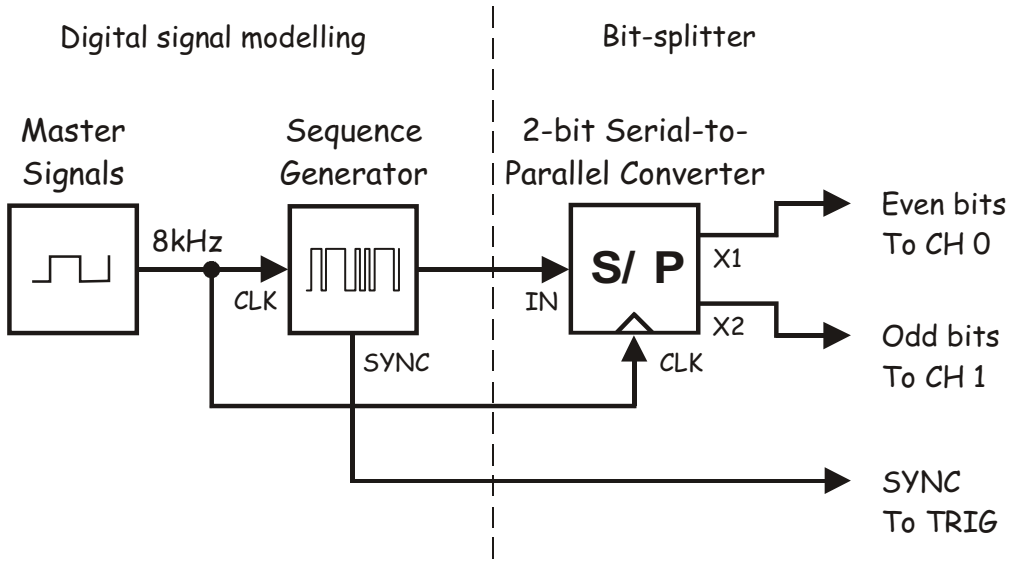

Figure 4

9. Launch and run the NI ELVIS II Oscilloscope VI.

10. Set up the scope per the procedure in Experiment 1 with the following change:

    - *Trigger Type* control to *Digital* instead of *Edge*

11. Activate the scope's Channel 1 input to observe the Serial-to-Parallel Converter module's two outputs.

12. Compare the signals. You should see two digital signals that are different to each other.

Question 1
What is the relationship between the bit rate of these two digital signals and the bit rate of the Sequence Generator module's output? **Tip:** If you're not sure, see the preliminary discussion.



Ask the instructor to check your work before continuing.

 © 2008 Emona Instruments

13. Modify the set-up as shown in Figure 5 below.

Remember: Dotted lines show leads already in place.

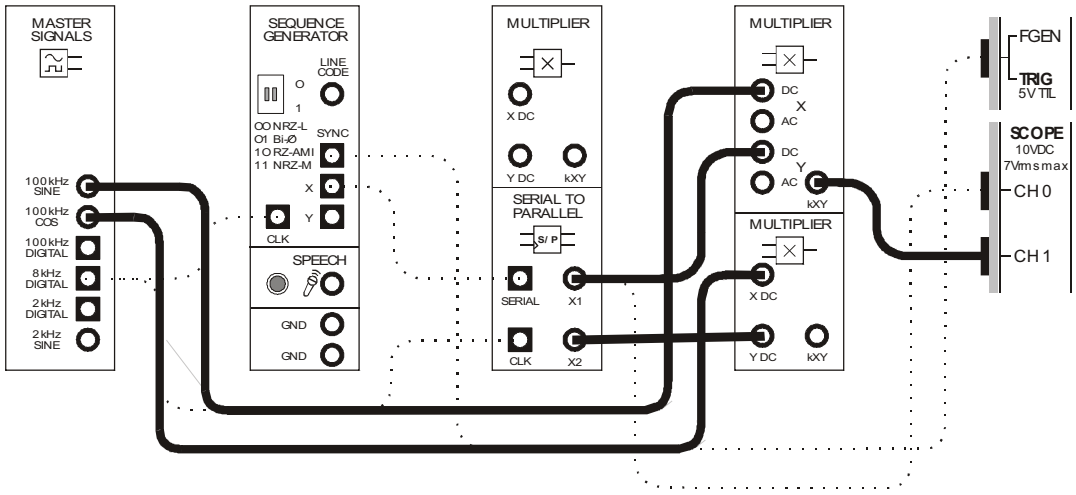

Figure 5

Excluding the digital data modelling, this set-up can be represented by the block diagram in Figure 6 on the next page. Notice that the bit-splitter's two outputs are connected to independent Multiplier modules. The other input to the Multiplier modules is a 100kHz sinewave. However, the signals are out of phase with each other by 90° which is a requirement of QPSK.

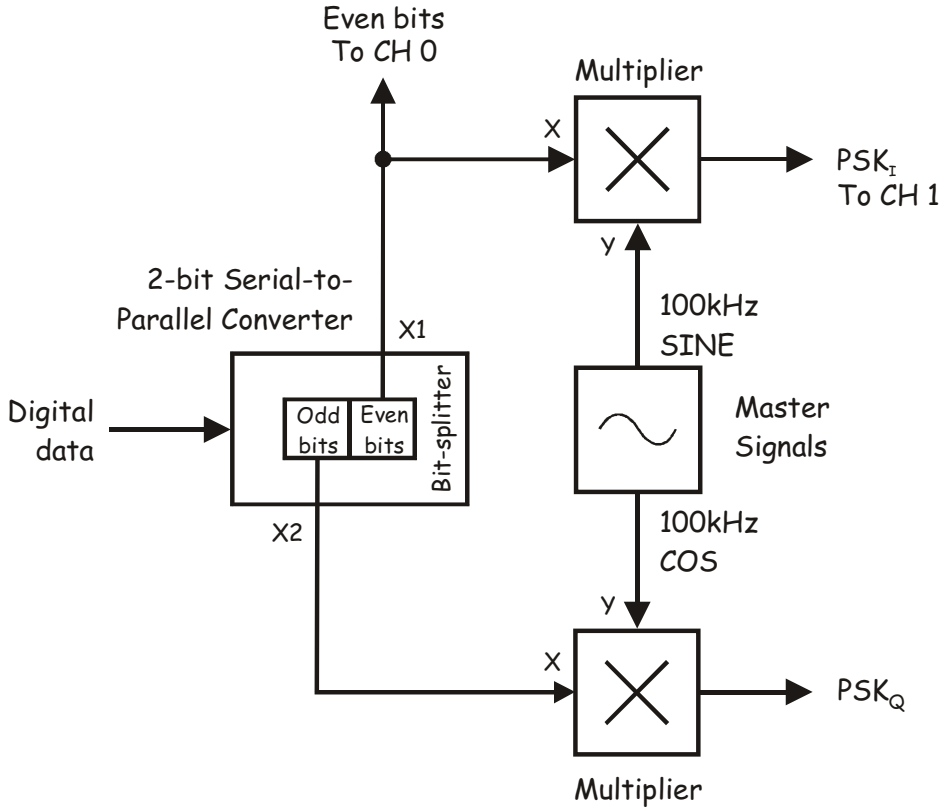

Figure 6

14. Set the scope's *Timebase* control to the *200µs/div* position.

15. Compare the even bits of data with the Multiplier module's output (PSK_I).

    Tip: You may find this easier to do if you set the scope's Channel 1 *Scale* control to the *2V/div* position.

16. Set the scope's *Trigger Type* control to the *Edge* position.

17. Set the scope's *Timebase* control to the *50µs/div* position.

18. Examine the carrier and look closely at the way it changes at the sequence's transitions.

Question 2
What feature of the Multiplier's output suggests that it's a BPSK signal?

 © 2008 Emona Instruments

Ask the instructor to check your work before continuing.

19. Return the scope's *Timebase* control to the *500µs/div* position and the *Trigger Type* to the *Digital* position.

20. Move the scope's connections as shown in Figure 7 below.

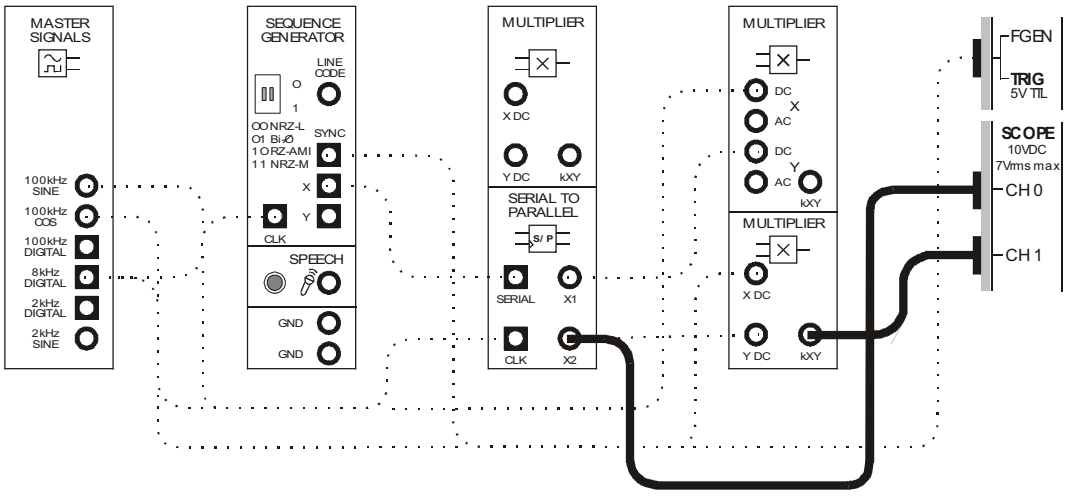

Figure 7

This change can be shown on the block diagram in Figure 8 on the next page.

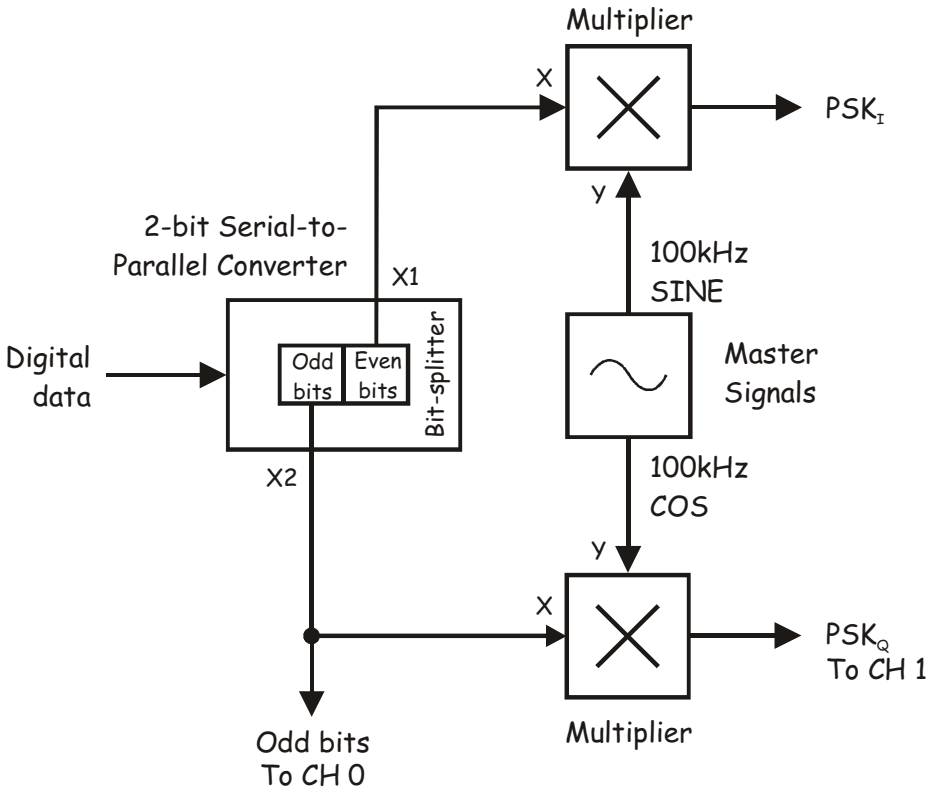

Figure 8

21. Set the scope's *Timebase* control to the *200µs/div* position.

22. Compare the even bits of data with the Multiplier module's output (PSK_I).

23. Set the scope's *Trigger Type* control to the *Edge* position.

24. Set the scope's *Timebase* control to the *50µs/div* position.

25. Examine the carrier and look closely at the way it changes at the sequence's transition.

Question 3
What type of signal is present on the Multiplier's output?

 © 2008 Emona Instruments

Ask the instructor to check your work before continuing.

26. Return the scope's *Timebase* control to the *500µs/div* position and the *Trigger Type* to the *Digital* position.

27. Modify the set-up as shown in Figure 9 below.

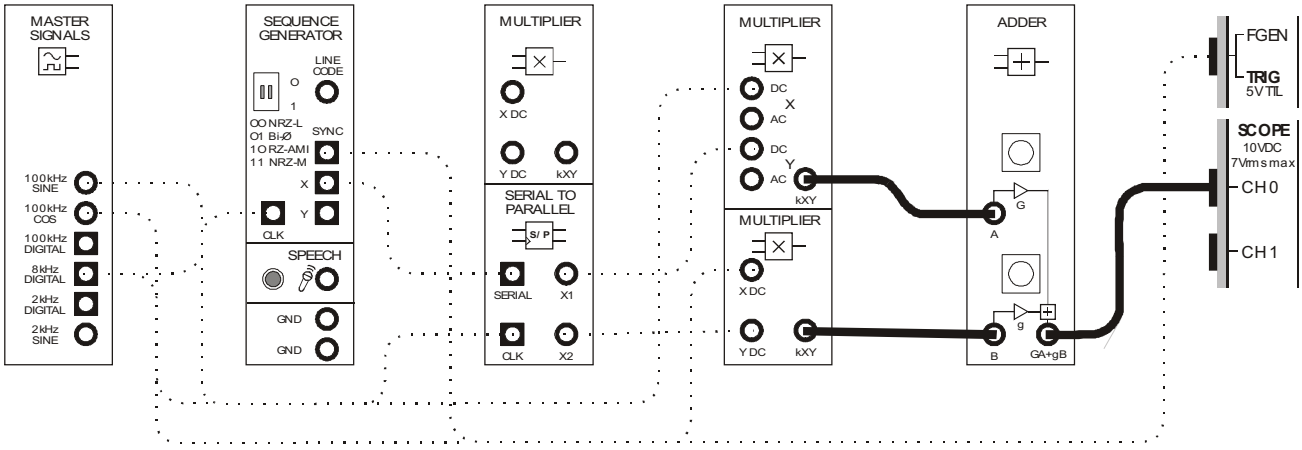

Figure 9

This set-up can be represented by the block diagram in Figure 10 on the next page. The Adder module is used to add the PSK_I and PSK_Q signals. This turns the set-up into a complete QPSK modulator.

© 2008 Emona Instruments

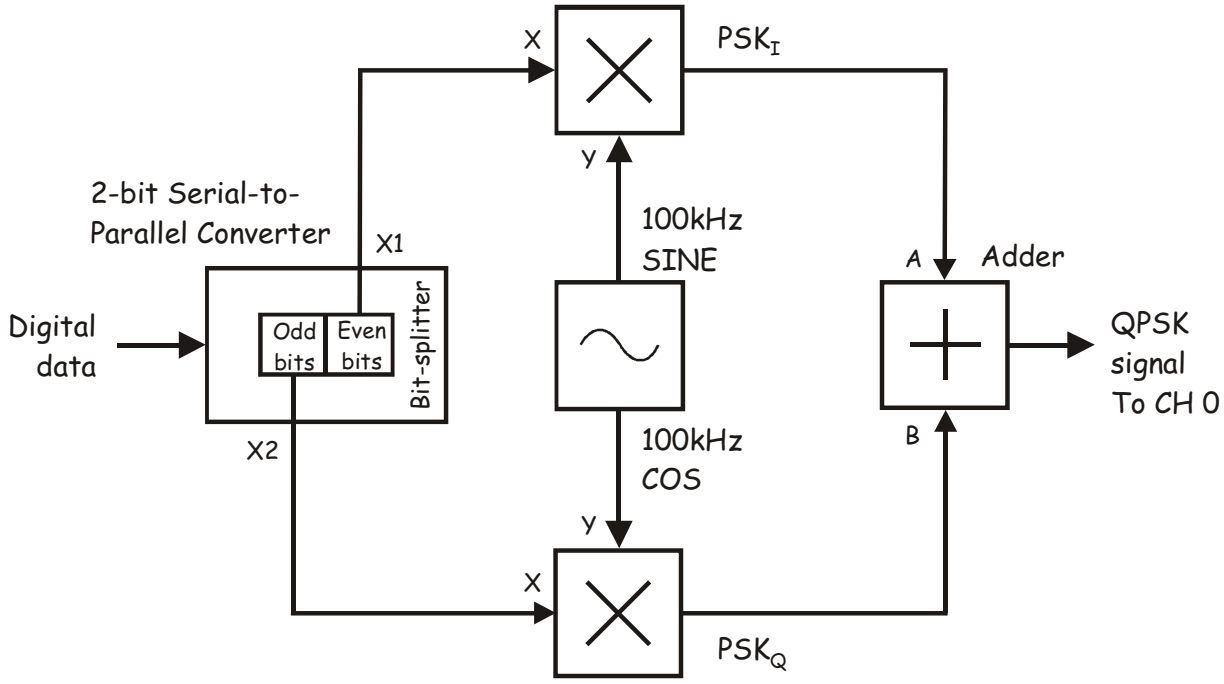

Figure 10

28. Launch the DATEx soft front-panel (SFP) and check that you have soft control over the DATEx board.

29. Disconnect the patch lead to the Adder module's *A* input.

    Note: This removes the BPSK$_I$ signal from the signal on the Adder module's output.

30. Locate the Adder module on the DATEx SFP and adjust its soft *g* control to obtain a 4Vp-p output.

31. Reconnect the patch lead to the Adder module's *A* input.

32. Disconnect the patch lead to the Adder module's *B* input.

    Note: This removes the BPSK$_Q$ signal from the signal on the Adder module's output.

33. Adjust the Adder module's soft *G* control to obtain a 4Vp-p output.

34. Reconnect the patch lead to the Adder module's *B* input.

 © 2008 Emona Instruments

Question 4

According to the theory, what type of digital signal transmission is now present on the Adder module's output?

QPSK or OQPSK: What's the difference?

QPSK modulation is normally generated from a single data stream converted to two parallel data streams. In this particular experiment, the serial/parallel converter outputs the parallel streams such that the bits are offset from each other by one clock period. Therefore, in this experiment we are actually implementing a form of QPSK known as *Offset QPSK* (OQPSK).



Ask the instructor to check your work before continuing.

© 2008 Emona Instruments

Part B – Observations of QPSK bandwidth in the frequency domain

One of the advantages of QPSK over BPSK is its higher data rate for the same bandwidth. The next part of the experiment lets you see this for yourself using the NI ELVIS II Dynamic Signal Analyzer.

35. Disconnect the patch lead to the Adder module's *A* input.

    Note: This removes the $BPSK_I$ signal from the signal on the Adder module's output, effectively turning the signal into simple BPSK.

36. Suspend the scope VI's operation by clicking on its *Stop* control once.

    Note: This should freeze the display.

37. Launch and run the NI ELVIS II Dynamic Signal Analyzer VI.

38. Adjust the signal analyzer's controls as follows:

    Input Settings

    - *Source Channel* to *SCOPE CH 1*
    - Voltage Range to ±10V

    FFT Settings

    - *Frequency Span* to *200,000*
    - *Resolution* to *400*
    - *Window* to *7 Term B-Harris*

    Averaging

    - *Mode* to *RMS*
    - *Weighting* to *Exponential*
    - *# of Averages* to *3*

    Trigger Settings

    - *Type* to *Edge*

    Frequency Display

    - *Units* to *dB*
    - *Mode* to *RMS*
    - *Scale* to *Auto*
    - *Cursors On* box unchecked

39. Reconnect the patch lead to the Adder module's *A* input while watching the signal analzer's display carefully.

    Note: Doing this turns the system back into a QPSK modulator and so doubles the data rate.

Question 5
What effect did doubling the data rate have on the signal's bandwidth?

Question 6
Did adding the $BPSK_I$ signal have any effect on the Adder module's output? If so, what?



Ask the instructor to check
your work before continuing.

© 2008 Emona Instruments

Part C – Using phase discrimination to pick-out one of the QPSK signal's BPSK signals

It's not possible to implement both a QPSK modulator and a full demodulator with just one Emona DATEx module. However, it is possible to demonstrate how phase discrimination is used by a QPSK demodulator to pick-out one or other of the two BPSK signals that make up the QPSK signal. The next part of the experiment lets you do this.

40. Close signal analyzer's VI.

41. Locate the Phase Shifter module on the DATEx SFP and set its soft *Phase Change* control to the *0°* position.

42. Locate the Tuneable Low-pass Filter module on the DATEx SFP and set its soft *Gain* control to about the middle of its travel.

43. Turn the Tuneable Low-pass Filter module's soft *Frequency Adjust* control fully clockwise.

44. Modify the set-up as shown in Figure 11 below.

    Note: As there are a lot of connections, you may find it helpful to tick them off as you add them.

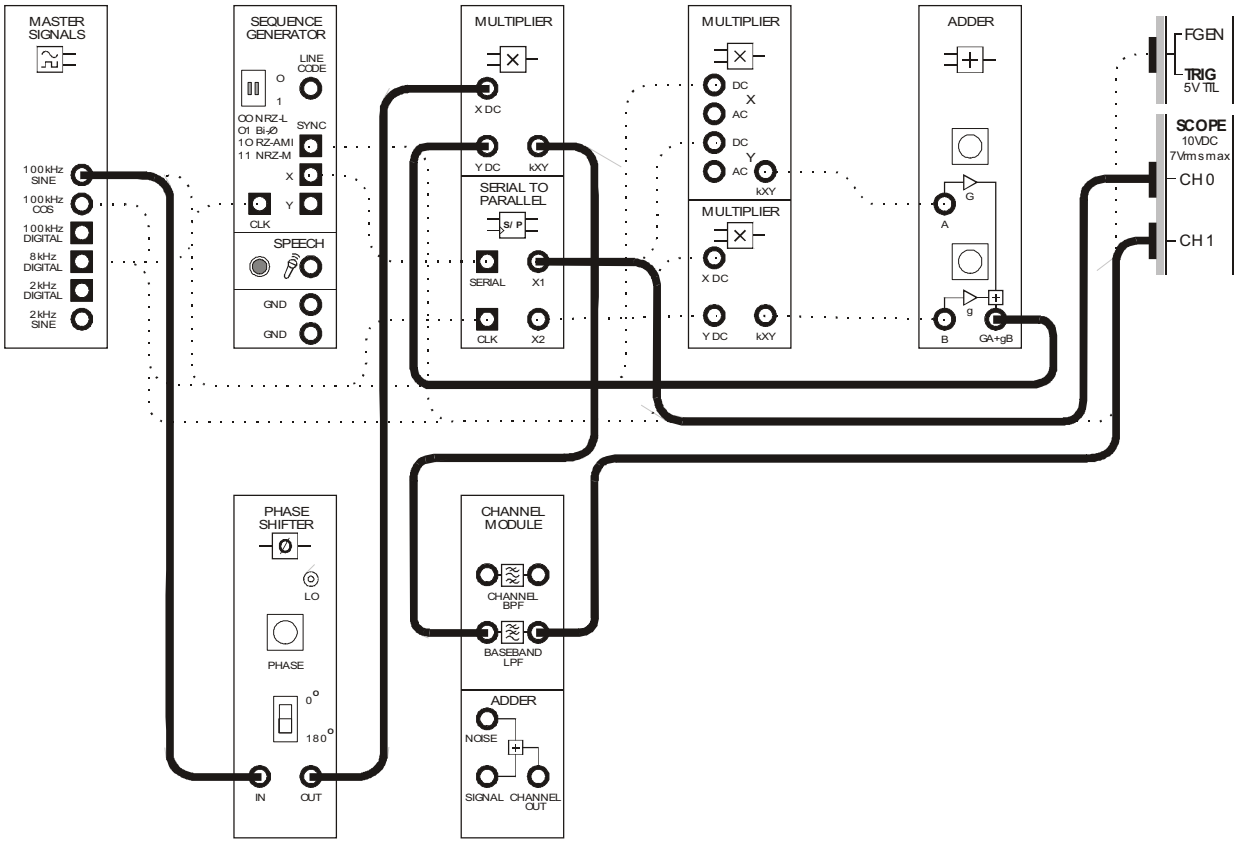

Figure 11

 © 2008 Emona Instruments

The additions to the set-up in Figure 11 can be represented by the block diagram in Figure 12 below. If you compare the block diagram to Figure 2 in the preliminary discussion, you'll notice that it implements most of one arm of a QPSK demodulator (either I or Q).

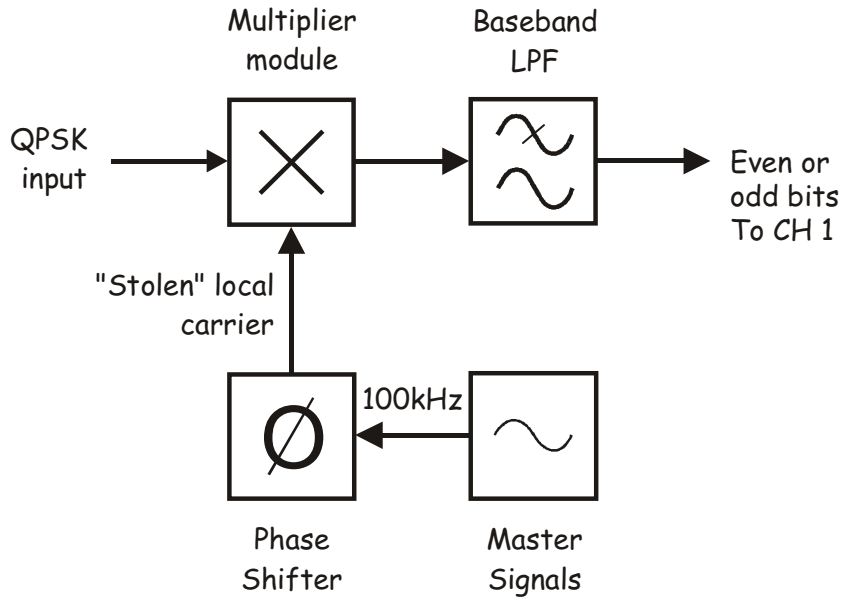

Figure 12

45. Restart the scope's VI by clicking its *Run* control once.

46. Compare the even data bits on the Serial-to-Parallel Converter module's *X1* output with the data on the output of the Baseband LPF.

47. Vary the Phase Shifter module's soft *Phase Adjust* control left and right and observe the effect on the demodulated signal.

48. Set the Phase Shifter module's soft *Phase Change* control to the *180°* position and repeat step 47.

Question 7
Why does the recovered signal have 3 or 4 voltage levels instead of 2 levels as you would expect for a digital signal?

Ask the instructor to check your work before continuing.

49. Modify the set-up as shown in Figure 13 below.

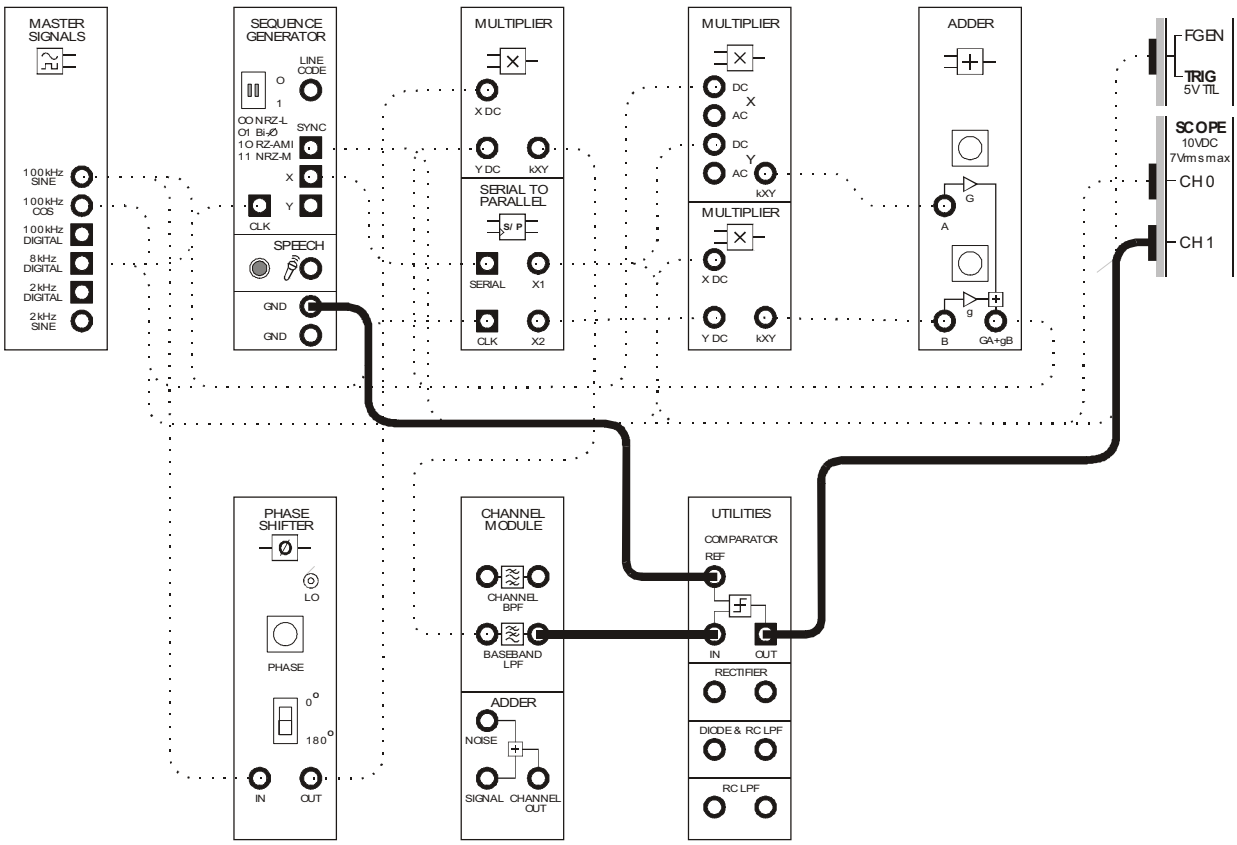

Figure 13

The addition of the Comparator on the Utilities module can be represented by the block diagram in Figure 14 on the next page. If you compare this block diagram with Figure 2 in the preliminary discussion, you'll notice that this change completes one arm of a QPSK demodulator.

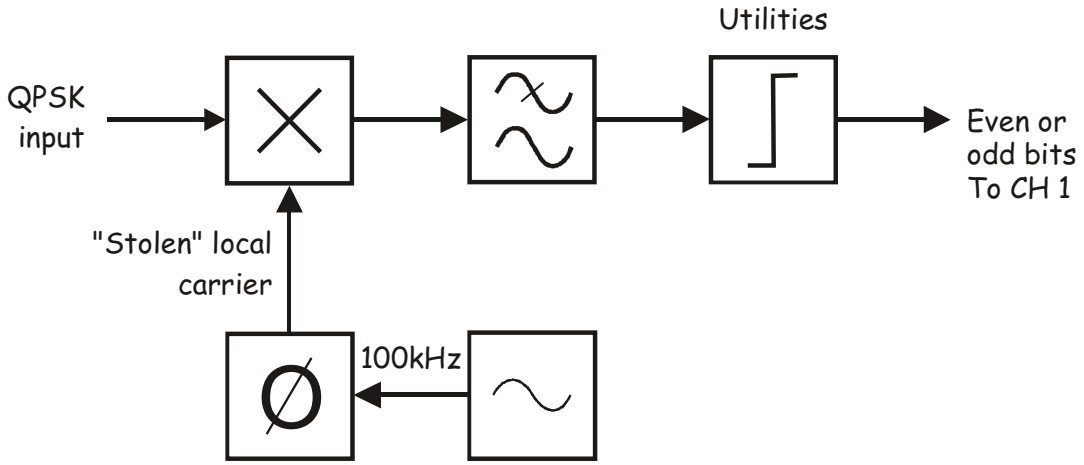

Figure 14

50. Return the Phase Shifter module's soft *Phase Change* control to the *0°* position.

51. Compare the even data bits on the Serial-to-Parallel Converter module's *X1* output with the data on the output of the Baseband LPF.

52. Adjust the Phase Shifter module's soft *Phase Adjust* control until you have recovered the even data bits (ignoring any phase shift).

Question 8

What is the present phase relationship between the local carrier and the carrier signals used to generate the PSK_I and PSK_Q signals?

Ask the instructor to check your work before continuing.

53. Unplug the scope's Channel 0 input from the Serial-to-Parallel Converter module's *X1* output and connect it to its *X2* output to view the odd data bits.

54. Compare the odd data bits with the recovered data. They should be different.

55. Set the Phase Shifter module's soft *Phase Change* control to the *180°* position.

56. Adjust the Phase Shifter module's soft *Phase Adjust* control until you have recovered the odd data bits (ignoring any phase shift).

Question 9
What is the new phase relationship between the local carrier and the carrier signals used to generate the PSK_I and PSK_Q signals?

Question 10
Why is your demodulator considered to be only one half of a full QPSK receiver?



Ask the instructor to check your work before finishing.

 © 2008 Emona Instruments

Name: _____

Class: _____

21 - DSSS modulation and demodulation

Experiment 21 – DSSS modulation and demodulation

Preliminary discussion

Recall that when a sinusoidal carrier is DSBSC modulated by a message, the two signals are multiplied together. Recall also that the resulting DSBSC signal consists of two sets of sidebands but no carrier (refer to the preliminary discussion of Experiment 6 for a discussion of this).

When the DSBSC signal is demodulated using product detection, both sidebands are multiplied with a local carrier that must be synchronised to the transmitter's carrier (that is, it has the same frequency and phase). Doing so produces two messages that are in-phase with each other and so add to form a single bigger message (refer to the preliminary discussion of Experiment 9 for a discussion of this).

Direct sequence spread spectrum (DSSS or often just "spread spectrum") is a variation of the DSBSC modulation scheme with a pulse train (called a *pseudo-noise* sequence or just PN sequence) for the carrier instead of a simple sinewave. This may sound radical until you remember that pulse trains are actually made up of a theoretically infinite number of sinewaves (the *fundamental* and *harmonics*). That being the case, spread spectrum is really the DSBSC modulation of a theoretically infinite number of sinusoidal carrier signals. The result is a theoretically infinite number of pairs of tiny sidebands about a suppressed carrier.

In practice, not all of these sidebands have any energy of significance. However, the fact that the message information is distributed across so many of them makes spread spectrum signals difficult to deliberately interfere with or "jam". To do so, you would have to upset a significant number of the sidebands which is difficult considering their number.

Spread spectrum signals are demodulated in the same way as DSBSC signals using a product detector. Importantly, the product detector's local carrier signal must contain all the sinewaves that make up transmitter's pulse train at the same frequency and phase. If this is not done, the tiny demodulated signals will be at the wrong frequency and phase and so they won't add up to reproduce the original message. Instead, they'll produce a garbage signal that looks like noise.

The only way for the receiver to generate the right number of sinewaves at the right frequency is to use a pulse train with an identical sequence to that used by the transmitter. Moreover, it must be synchronised. This issue gives spread spectrum another of its advantages over other modulation schemes. The transmitted signal is effectively encrypted.

Of course, with trial and error it's possible for an unauthorised person to guess the correct PN sequence to use for their receiver. However, this can be made difficult by making the sequence longer before it repeats itself (that is, by making it consist of more bits or *chips*). Longer sequences can produce more combinations of unique codes which would take longer to guess using a trial and error approach. To illustrate this point, an 8-bit code has 256 combinations while a 20-bit code has 1,048,575 combinations. A 256-bit code has 1.1579×10^{77} combinations. That's 11579 with 73 zeros after it!

Increasing the sequence's chip-length has another advantage. To explain, the total energy in a spread spectrum signal is distributed between all of the tiny DSBSC that make it up (though not evenly because not all of the sinewaves that make up the carrier's pulse train are the same amplitude). A mathematical technique called *Fourier Analysis* shows that the greater the number of chips in a sequence before repeating, the greater the number of sinewaves of significance needed to make it.

That being the case, using more chips in the transmitter's PN sequence produces more DSBSC signals and so the signal's total energy is distributed more thinly between them. This in turn means that the individual signals are many and extremely small. In fact, if the PN sequence is long enough, all of these DSBSC signals are smaller than the background electrical noise that's always present in free-space. This fact gives spread spectrum yet another important advantage. The signal is difficult to detect.

Spread spectrum finds use in several digital applications including: CDMA mobile phone technology, cordless phones, the global positioning system (GPS) and two of the 802.11 wi-fi standards.

The experiment

For this experiment you'll use the Emona DATEx to generate a DSSS signal by implementing its mathematical model. You'll then use a product detector (with a stolen carrier) to reproduce the message. Once done, you'll examine the importance of using the correct PN sequence for the local carrier and the difficulty of jamming DSSS signals.

It should take you about 50 minutes to complete this experiment.

Equipment

- Personal computer with appropriate software installed
- NI ELVIS II plus USB cable and power pack
- Emona DATEx experimental add-in module
- Two BNC to 2mm banana-plug leads
- Assorted 2mm banana-plug patch leads

Procedure

Part A – Generating a DSSS signal using a simple message

As DSSS is basically just DSBSC with a pulse train for the carrier instead of a simple sinusoid, it can be generated by implementing the mathematical model for DSBSC.

1. Ensure that the NI ELVIS II power switch at the back of the unit is off.

2. Carefully plug the Emona DATEx experimental add-in module into the NI ELVIS II.

3. Set the *Control Mode* switch on the DATEx module (top right corner) to *PC Control*.

4. Connect the NI ELVIS II to the PC using the USB cable.

   Note: This may already have been done for you.

5. Turn on the NI ELVIS II power switch at the rear of the unit then turn on its *Prototyping Board Power* switch at the top right corner near the power indicator.

6. Turn on the PC and let it boot-up.

7. Launch the NI ELVISmx software.

8. Launch the DATEx soft front-panel (SFP) and check that you have soft control over the DATEx board.

9. Locate the Sequence Generator module on the DATEx SFP and set its soft dip-switches to 00.

10. Connect the set-up shown in Figure 1 below.

Note: Insert the black plugs of the oscilloscope leads into a ground (*GND*) socket.

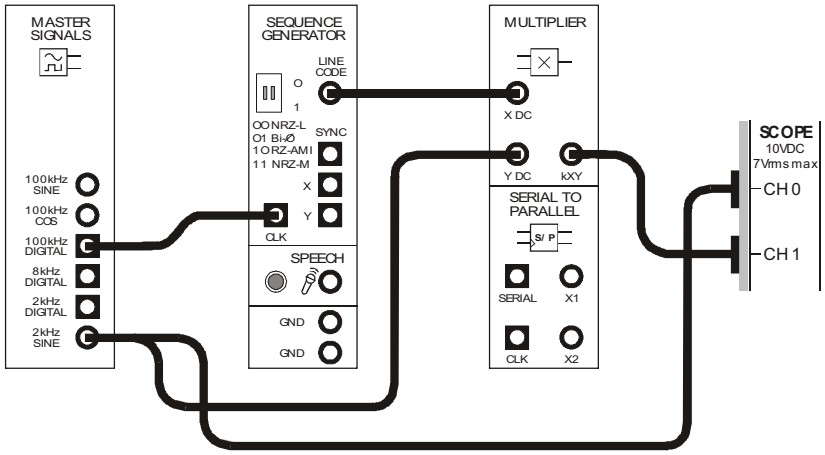

Figure 1

This set-up can be represented by the block diagram in Figure 2 below. It multiplies the 2kHz sinewave message with a PN sequence modelled by the Sequence Generator's 32-bit pulse train output.

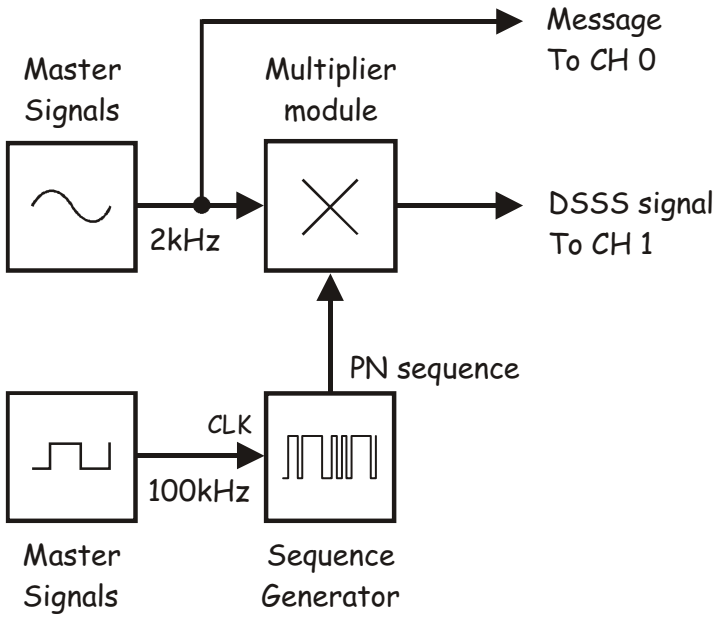

Figure 2

 © 2008 Emona Instruments

11. Launch and run the NI ELVIS II Oscilloscope VI.

12. Set up the scope per the instructions in Experiment 1 with the following changes:

    - *Timebase* control to *100µs/div* instead of *500µs/div*
    - Channel 1 *Scale* control to *2V/div* instead of *1V/div*

13. Activate the scope's Channel 1 input to observe the DSSS signal out of the Multiplier module as well as the message signal.

14. Draw the two waveforms to scale in the space provided on the next page leaving room to draw a third waveform.

    Tip: Draw the message signal in the upper third of the graph and the DSSS signal in the middle third.

Question 1
What feature of the Multiplier module's output suggests that it's basically a DSBSC signal? **Tip:** If you're not sure, read the preliminary discussion for Experiment 6.

Question 2
Why is the DSSS signal so large when it's supposed to be small and indistinguishable from noise? **Tip:** If you're not sure, see the preliminary discussion for this experiment.

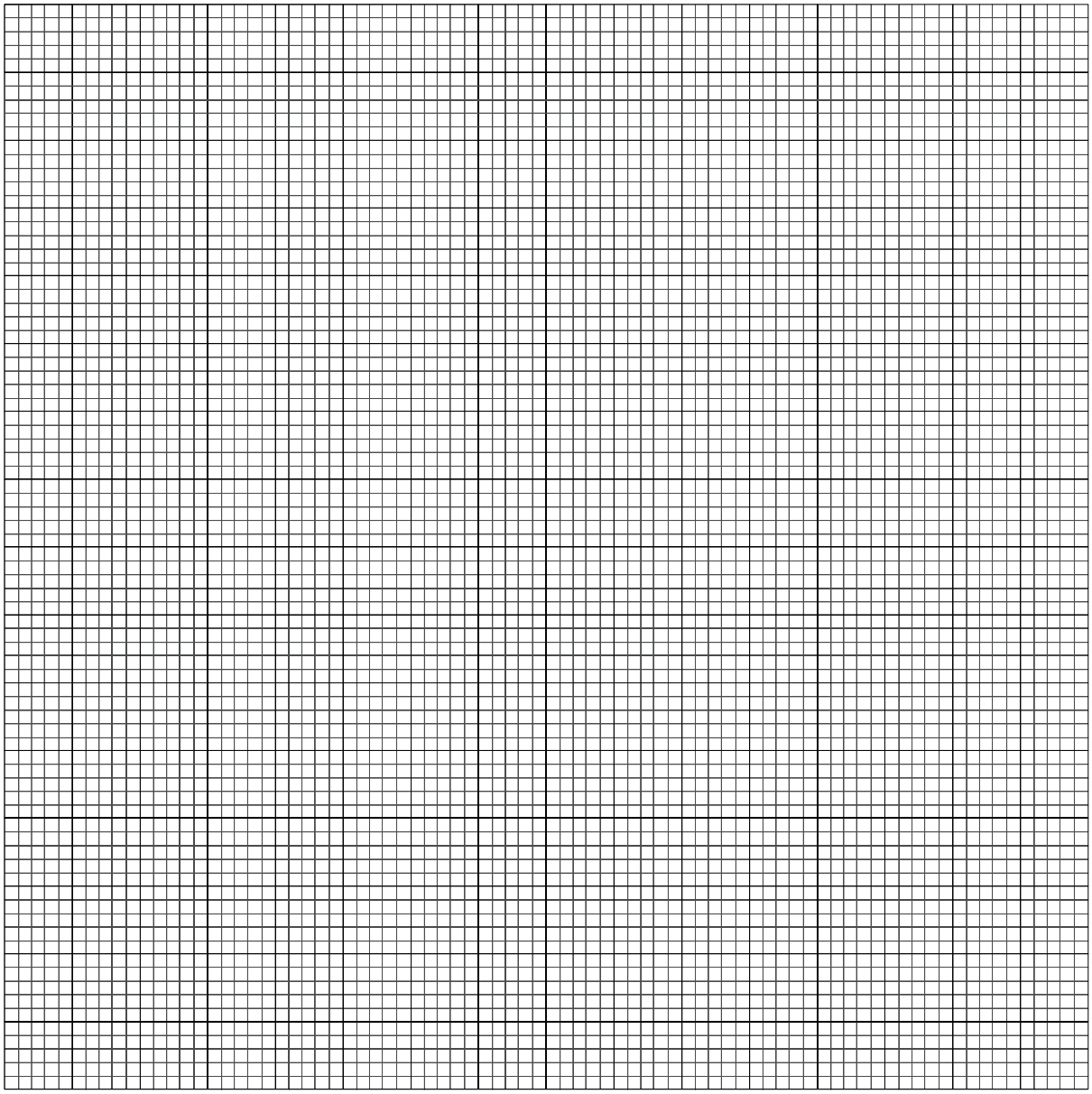



Ask the instructor to check your work before continuing.

 © 2008 Emona Instruments

Part B – Observations of DSSS signals in the frequency domain

One of the features of DSSS is that it produces a theoretically infinite number of pairs of tiny sidebands with each pair straddling a suppressed carrier. This part of the experiment lets you examine this.

15. Launch and run the NI ELVIS II Function Generator VI.

16. Adjust the function generator using its soft controls for an output with the following specifications:

    - Waveshape: Square
    - Frequency: 30kHz
    - Amplitude: 4Vpp
    - DC Offset: 0V

17. Disconnect the plug to the Sequence Generator module's *LINE CODE* output and modify the set-up as shown in Figure 3 below.

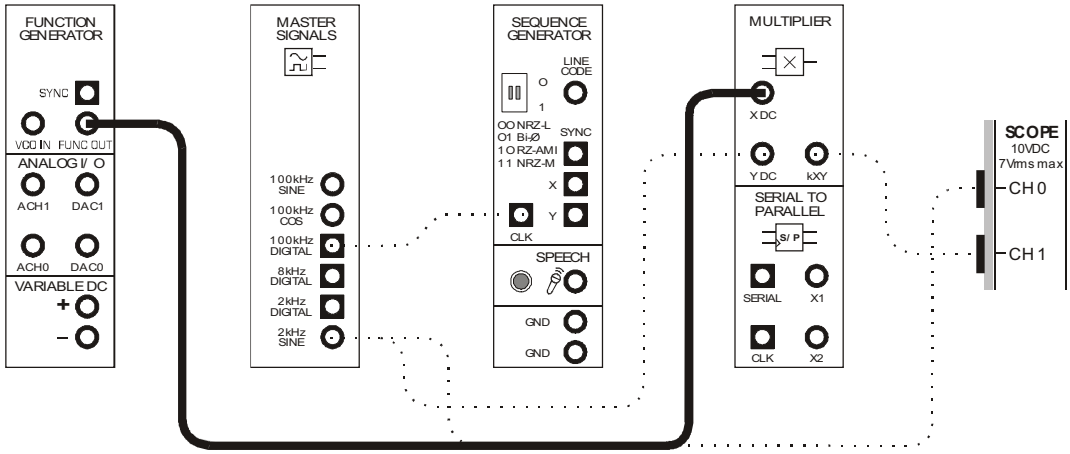

Figure 3

18. Examine the new DSSS signal on the scope.

    Note: You should notice that it looks similar to the DSSS signal you obtained earlier. That said, it'll be different in that the spacing between the carrier's transitions are regular.

The set-up in Figure 3 can be represented by the block diagram in Figure 4 below. Notice that the carrier signal is a 30kHz squarewave.

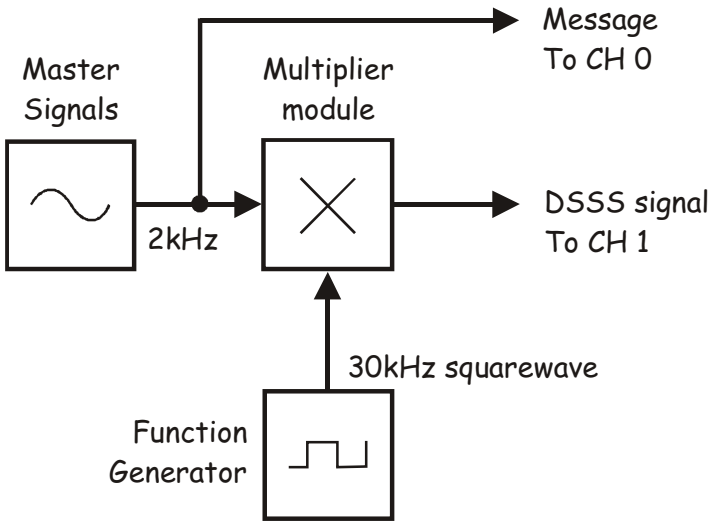

Figure 4

Recall that a squarewave consists of a fundamental at the same frequency as the squarewave itself and a theoretically infinite number of odd harmonics (each with proportionally smaller amplitude to the amplitude of the frequency before it). So, our 30kHz squarewave carrier consists of sinewaves at 30kHz, 90kHz, 150kHz, 210kHz and so on.

Theoretically then, the DSSS signal consists of a 30kHz suppressed carrier with 28kHz and 32kHz lower and upper sidebands, a 90kHz suppressed carrier with 88kHz and 92kHz lower and upper sidebands, a 150kHz suppressed carrier with 148kHz and 152kHz lower and upper sidebands, and so on. Let's examine these using the NI ELVIS II Dynamic Signal Analyzer virtual instrument.

19. Suspend the scope VI's operation by clicking on its *Stop* control once.

    Note: The scope's display should freeze.

20. Launch and run the NI ELVIS II Dynamic Signal Analyzer VI.

21. Adjust the signal analyzer's controls as follows:

    Input Settings

    - *Source Channel* to *SCOPE CH 1*
    - Voltage Range to ±10V

    FFT Settings

    - *Frequency Span* to *200,000*
    - *Resolution* to *400*
    - *Window* to *7 Term B-Harris*

    Averaging

    - *Mode* to *RMS*
    - *Weighting* to *Exponential*
    - *# of Averages* to *3*

    Trigger Settings

    - *Type* to *Edge*

    Frequency Display

    - *Units* to *dB*
    - *Mode* to *RMS*
    - *Scale* to *Auto*
    - *Cursors On* box unchecked (for now)

The display should now be showing about ten pairs of what appear to be significant sinewaves. This is deceptive as you'll see.

22. Activate the signal analyzer's cursors by checking the *Cursors On* box.

23. Use the signal analyzer's *C1* cursor to measure the frequency in the middle of each pair of the sinewaves.

    Note: You'll find that the signal consists of pairs of sidebands about a suppressed carrier at frequencies listed in the second last paragraph of the previous page.

    You'll also find that it consists of sidebands about suppressed carriers at other frequencies. However, although these signals are present, the display is a little misleading because the vertical axis is logarithmic (i.e. non-linear).

24. Change the signal analyzer's *Units* control (under the *Frequency Display* heading) from *dB* to *Linear*.

    Note: This display shows you the linear relationship between the sinewaves' amplitude.

25. Use the signal analyzer's *C1* cursor to measure the frequency of these significant sinewaves.

    Note: The frequencies should be identical to those listed on the bottom of page 21-9.

26. Return the signal analyzer's *Units* control to the *dB* position.

27. Disconnect the patch lead from the function generator's output and return it to the Sequence Generator module's *LINE Code* output.

    Note: This returns the set-up to that shown in Figures 1 and 2 with a PN Sequence for the carrier instead of a squarewave.

28. Examine the spectral composition of the original DSSS signal with the Signal Analyzer's *Units* control in both the *dB* and *Linear* positions.

Question 3

Why is the spectral composition of the DSSS signal much more complex when the carrier is a PN Sequence instead of a squarewave?



Ask the instructor to check your work before continuing.

 © 2008 Emona Instruments

Part C – Using the product detector to recover the message

29. Close the signal analyzer's VI.

30. Restart the scope's VI by clicking its *RUN* control once.

    Note: If you closed the scope's VI instead of suspending it, set it up per the instructions in Experiment 1 with the following changes:

    - *Timebase* control to *100µs/div* instead of *500µs/div*
    - Channel 1 *Scale* control to *2V/div* instead of *1V/div*
    - *Activate* the scope's Channel 1 input

31. Locate the Tuneable Low-pass Filter module on the DATEx SFP and set its soft *Gain* control to about a quarter of its travel.

32. Turn the Tuneable Low-pass Filter module's soft *Cut-off Frequency Adjust* control fully anti-clockwise.

33. Modify the set-up as shown in Figure 5 below.

    Note: Notice that the leads connect to the Multiplier module's *AC* inputs and not its *DC* inputs.

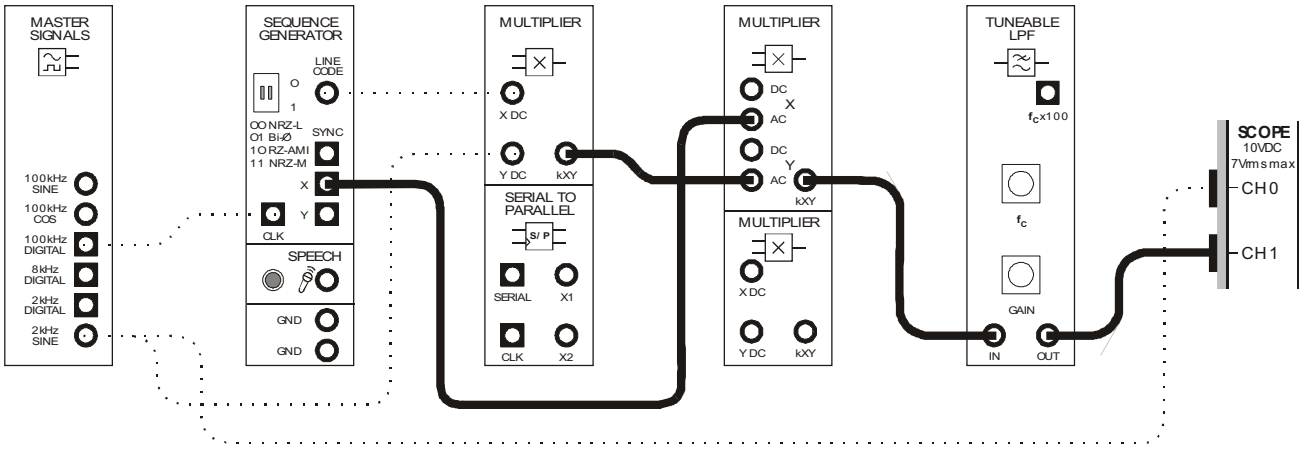

Figure 5

The additions to the set-up in Figure 5 can be represented by the block diagram in Figure 6 below. The Multiplier module and the Tuneable Low-pass Filter module implement a product detector which recovers the original message from the DSSS signal. To facilitate this, the PN sequence used for the modulator's carrier is "stolen" for the product detector's local carrier (though it's stolen from the module's *X* output but the bit pattern is the same).

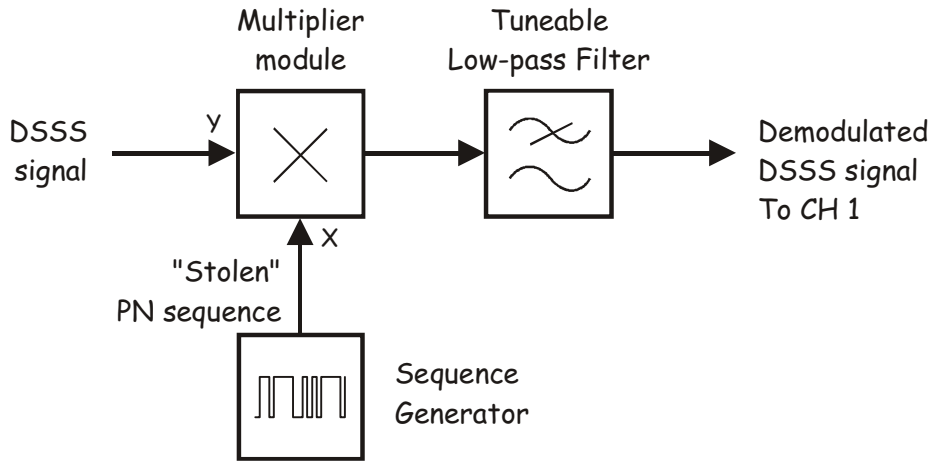

Figure 6

The entire set-up can be represented by the block diagram in Figure 7 below.

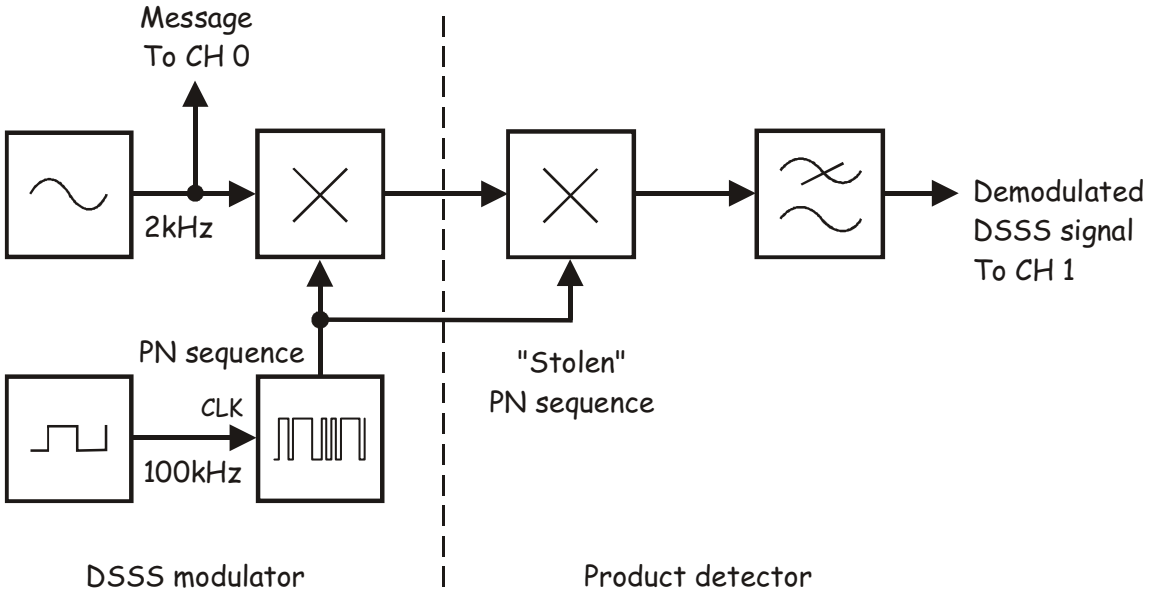

Figure 7

 © 2008 Emona Instruments

34. Slowly turn the Tuneable Low-pass Filter module's soft *Cut-off Frequency* control clockwise while watching the scope's display.

    Remember: You can use the keyboard's TAB and arrow keys for fine adjustments of DATEx controls.

35. Stop when the message signal has been recovered and is about in phase with the original.

36. Draw the demodulated DSSS signal to scale in the space that you left on the graph paper.



Ask the instructor to check your work before continuing.

Recall that the message can only be recovered by the product detector if an identical PN sequence to the DSSS modulator's carrier is used. The next part of the experiment demonstrates this.

37. Modify the set-up as shown in Figure 8 below to make the demodulator's local carrier a different PN sequence to the transmitter's carrier.

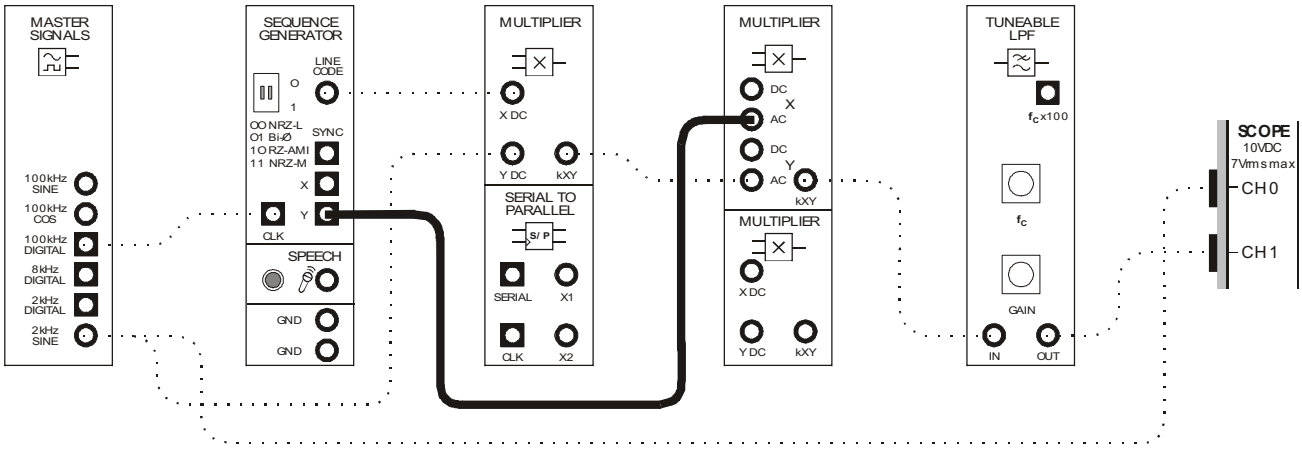

Figure 8

38. Compare the message with the product detector's new output.

Question 4
What does the signal out of the low-pass filter look like?

Question 5
Why does using the wrong PN sequence for the local carrier cause the product detector's output to look like this?



Ask the instructor to check your work before continuing.

Part D - DSSS and deliberate interference (jamming)
Interference occurs when an unwanted electrical signal gets added to the transmitted signal (typically in the channel) and changes it enough to change the recovered message. Electrical noise is a significant source of unintentional interference.

However, sometimes noise is deliberately added to the transmitted signal for the purpose of interfering or "jamming" it. The next part of the experiment models deliberate interference to show how spread spectrum signals are highly resistant to it.

39. Move the patch lead from the Sequence Generator's Y output back to its X output.

Note: The product detector should now be recovering the message again.

40. Adjust the function generator using its soft controls for an output with the following specifications:

    - Waveshape: Sine
    - Frequency: 50kHz
    - Amplitude: 4Vpp
    - DC Offset: 0V

41. Set the scope's *Trigger Source* control to the *CH 1* position.

42. Locate the Adder module on the DATEx SFP and turn its soft *g* control fully anti-clockwise.

43. Set the Adder module's soft *G* control to about the middle of its travel.

44. Modify the set-up as shown in Figure 9 below.

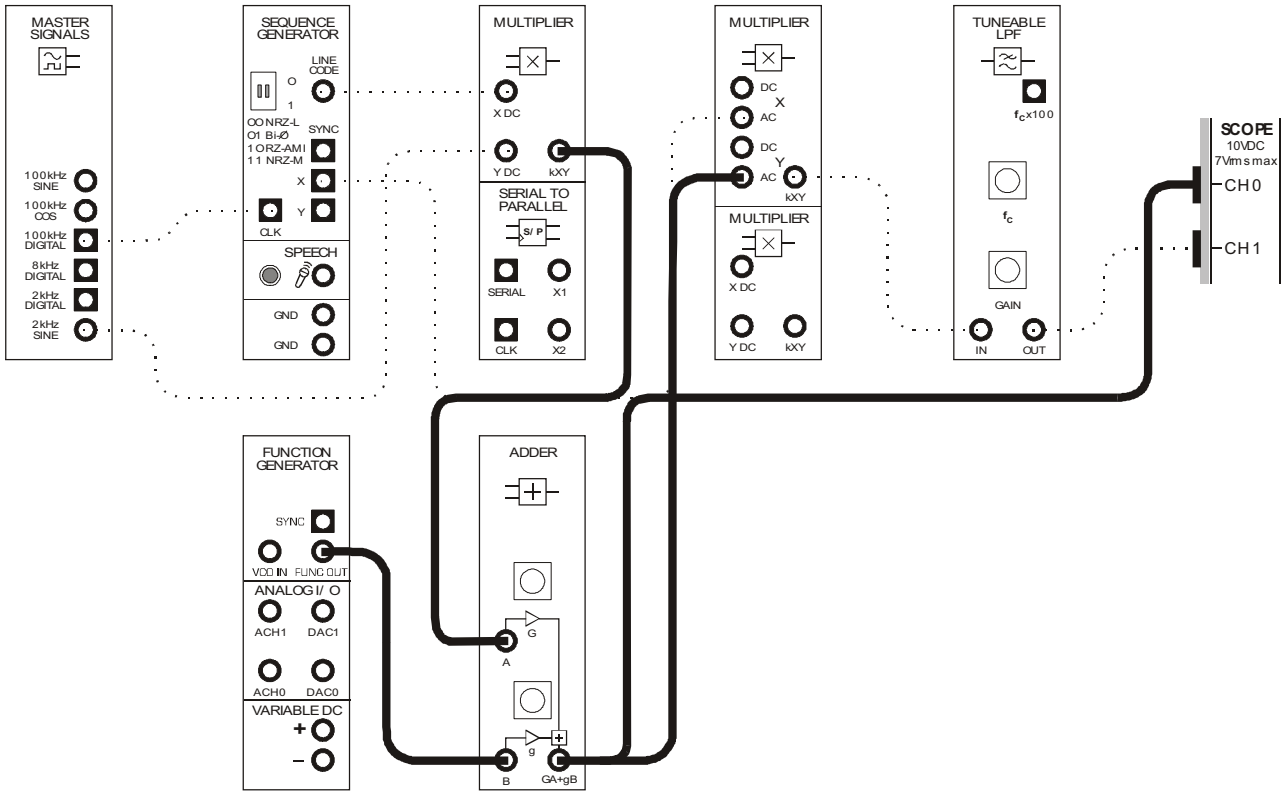

Figure 9

The set-up in Figure 9 can be represented by the block diagram in Figure 10 below. The function generator is used to generate a variable frequency jamming signal that is added to the DSSS signal in the channel using the Adder module.

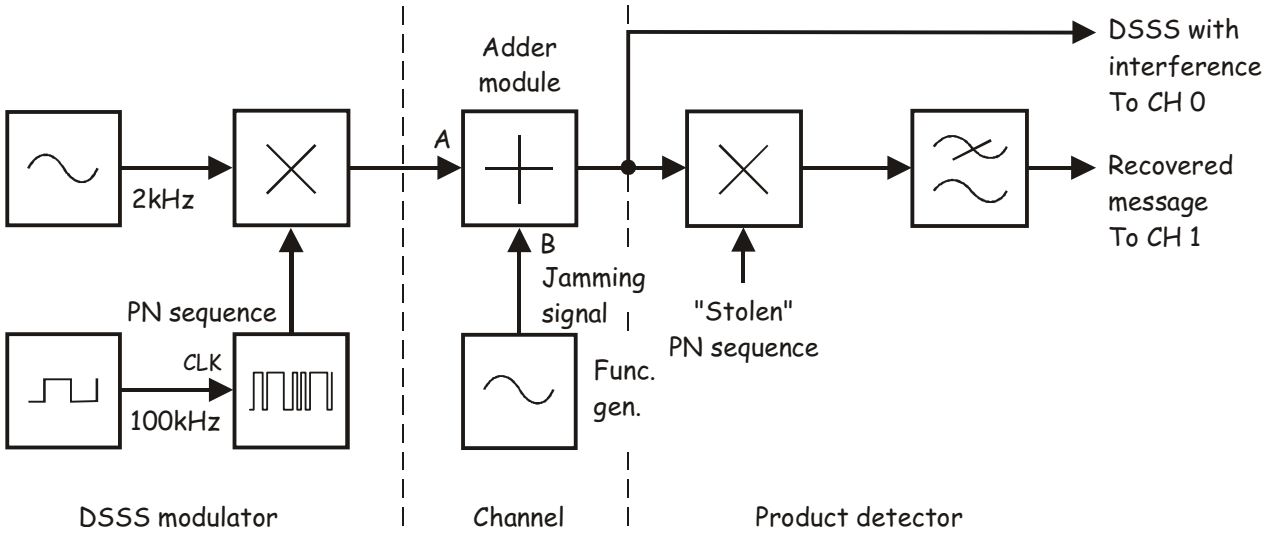

Figure 10

45. Add the jamming signal to the DSSS signal by slowly turning the Adder module's *g* control clockwise. Stop when it's at about half its travel.

46. As you increase the amplitude of the jamming signal note the effect it has on the DSSS signal and the recovered message.

47. Vary the jamming signal's frequency by varying the function generator's output frequency.

48. Note the effect this has on the DSSS signal and on the recovered message.

49. Increase the size of the jamming signal to maximum by turning the Adder module's *g* control fully clockwise.

50. Note the effect this has on the DSSS signal and on the recovered message.

Question 6

Why doesn't the jamming signal interfere with the recovery of the message?

 © 2008 Emona Instruments

Ask the instructor to check your work before continuing.

A more sophisticated approach to jamming involves automatically sweeping the jamming signal through a wide range of frequencies to increase the chances of upsetting the transmitted signal. The next part of the experiment let's you see how spread spectrum handles this.

51. Return the Adder module's *g* control to about the middle of its travel.

52. Adjust the function generator by setting its *Modulation Type* to *FM*.

53. Modify the set-up as shown in Figure 11 below.

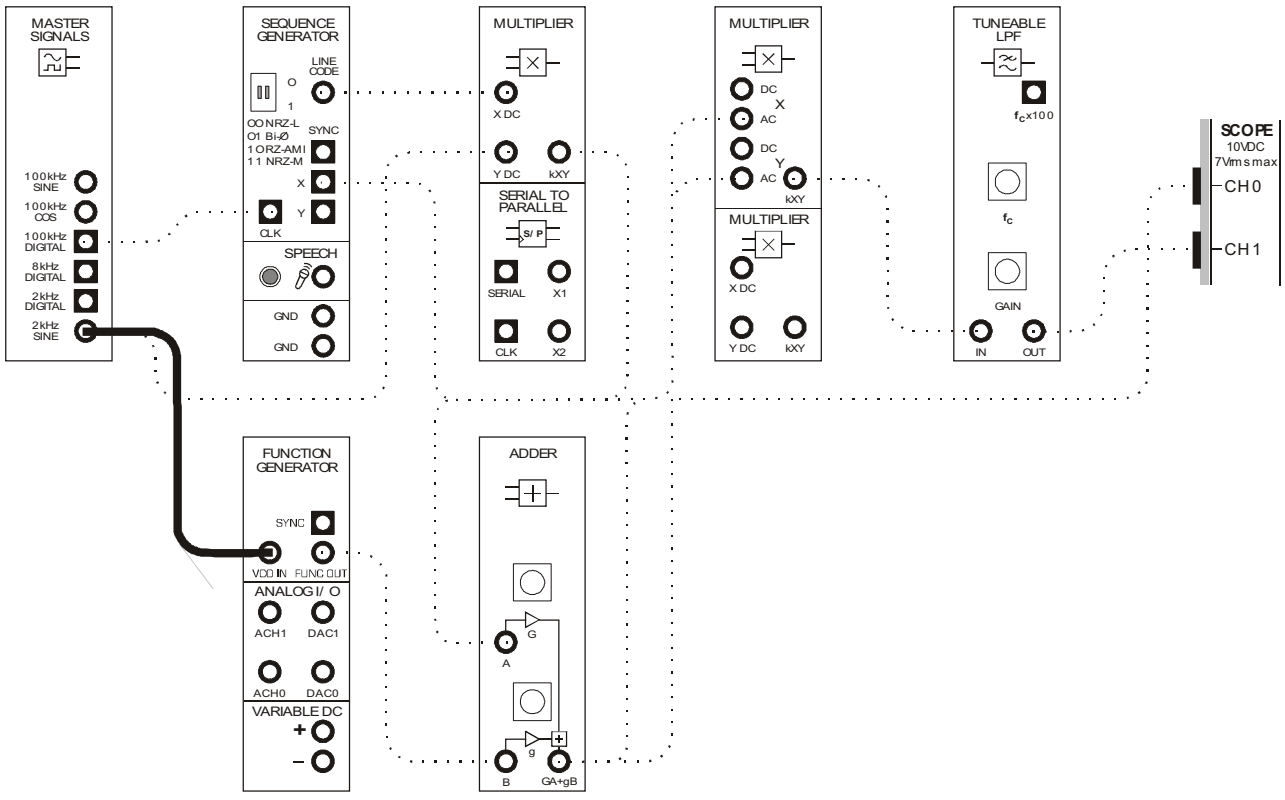

Figure 11

This modification forces the function generator's output to sweep continuously through a wide range of frequencies.

54. Note the effect this has on the DSSS signal and on the recovered message.

55. Increase the size of the jamming signal to maximum by turning the Adder module's *g* control fully clockwise.

56. Note the effect this has on the DSSS signal and on the recovered message.

Question 7
Why doesn't the sweeping jamming signal interfere with the recovery of the message?



Ask the instructor to check your work before continuing.

 © 2008 Emona Instruments

An even more sophisticated approach to jamming involves using many jamming signals at once (broadband jamming) to increase the chances of upsetting the transmitted signal. The next part of the experiment let's you see how spread spectrum handles this.

57. Return the Adder module's soft *g* control to about the middle of its travel.

58. Disconnect the lead to the function generator and modify the set-up as shown in Figure 12 below.

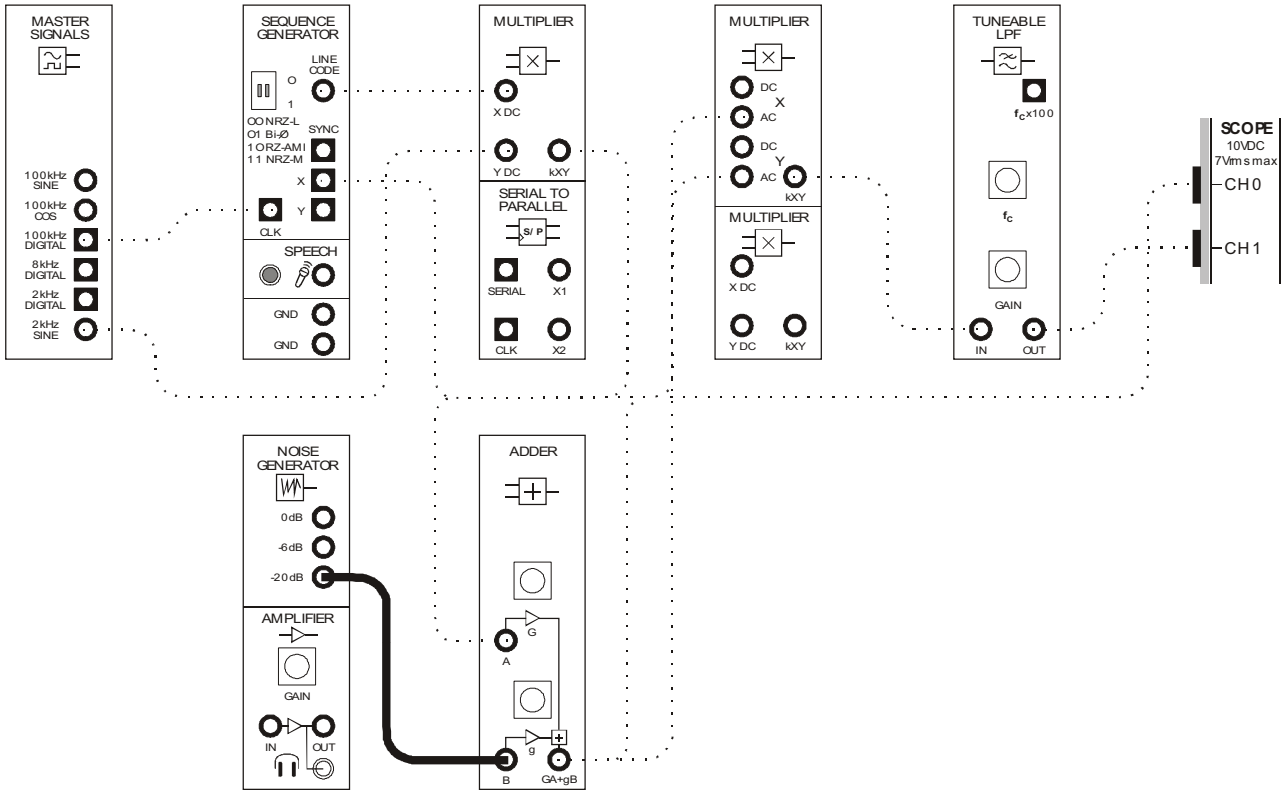

Figure 12

This modification uses the Noise Generator module to model a jamming signal that consists of thousands of frequencies.

59. Note the effect this has on the DSSS signal and on the recovered message.

60. Increase the strength of the broadband jamming signal by connecting the Adder module's B input to the Noise Generator module's *-6dB* output.

61. Note the effect this has on the DSSS signal and on the recovered message.

62. Increase the strength of the broadband jamming signal even more by connecting the Adder module's B input to the Noise Generator module's *0dB* output.

63. Note the effect this has on the DSSS signal and on the recovered message.

Question 8
Why doesn't this broadband jamming signal interfere with the recovery of the message?



Ask the instructor to check your work before finishing.

 © 2008 Emona Instruments

If time permits…

If the instructor allows, listen to how DSSS performs when being jammed by following these instructions. You'll need a set of stereo headphones for this activity.

1. Remove the jamming signal by disconnecting the Adder module's B input from the Noise Generator module's *0dB* output.

2. Connect the Tuneable Low-pass Filter module's output to the Amplifier module's input.

3. Locate the Amplifier module on the DATEx SFP and turn its soft *Gain* control fully anti-clockwise.

4. Without wearing the headphones, plug them into the Amplifier module's headphone socket.

5. Put the headphones on.

6. Adjust the Amplifier module's soft *Gain* control until the 2kHz tone is a comfortable sound level.

7. Investigate what happens when the wrong PN sequence is used to demodulate the DSSS signal (like you did in Part C) by moving the patch lead from the Sequence Generator's X output to its Y output.

8. Return the patch lead from the Sequence Generator's Y output back to its X output.

9. Investigate what happens when a single sinewave is used to jam the DSSS signal (like you did in Part D) by connecting the function generator's output to the Adder module's B input.

10. Investigate what happens when a broad-band signal is used to jam the DSSS signal (like you did in Part D) by connecting the Noise Generator module's *-20dB* output to the Adder module's B input.

11. Repeat the step above for higher levels of jamming/noise by connecting the Noise Generator module's *-6dB* output to the Adder module's B input then the *0dB* output.

Name: _____

Class: _____

22 - Undersampling in software defined radio

Experiment 22 – Undersampling in SDR (Software Defined Radio)

Preliminary discussion

Software defined radio

A striking feature of the relatively short history of electronic communications is the significant improvement in performance with each innovation (usually in terms of bandwidth requirements and/or noise immunity). This has often meant that, as better communications systems have been introduced, they have quickly replaced existing technologies. For a recent example of this, consider the switch from analog to digital cell phones.

However, where the existing technology has been too well established to be abandoned, the new system has run in parallel with the old. For a long-standing example of this, consider the commercial AM and FM radio systems.

Despite the benefits of new communications techniques, the disadvantages can't be ignored. Hardware is either rendered useless or it must be duplicated. These problems have lead to the development of the latest communications concept called s*oftware defined radio* (SDR). SDR is a single tuner that can receive and decode any of the existing communications formats (AM, FM, DSBSC, ASK, FSK, DSSS, etc). Moreover, it's is also capable of decoding any communications format that will be developed in the foreseeable future.

As its name implies, the astounding flexibility of SDR is achieved using software. Instead of implementing a hardware receiver that is necessarily band and modulation-scheme specific, SDR is a wideband receiver that converts radio signals to digital then decodes them using the software appropriate to the modulation scheme of the transmission signal. For a different modulation scheme, simply change the program. Better still, for a new modulation scheme, simply install the new program that's capable of decoding it.

Undersampling

An SDR receiver capable of receiving (and decoding) the majority of electronic communications would need to operate at frequencies up to and beyond 2.4GHz (a typical cell phone frequency). Recalling the *Nyquist Sample Rate*, you might be tempted to imagine the SDR receiver's Analog-to-Digital Converter (ADC) needing to sample cell phone signals at over 4.8GHz! However, the Nyquist requirement to sample at two or more times the highest frequency of the input signal is for avoiding aliasing of baseband signals.

Bandwidth limited signals (like radio signals in communications) don't have frequency components near DC. That being the case, the type of aliasing that the Nyquist Sample Rate attempts to avoid isn't a problem. In fact, Shannon's Information Theorem states that all of the information in a bandwidth limited signal can be captured with a sampling rate as low as twice the signal's bandwidth.

In other words, a 2.4GHz carrier signal with a 30kHz bandwidth can be sampled at a frequency as low as 60kHz and still capture all of the signal's information. That said, there are certain sampling frequencies that will still cause aliasing and there is a mathematical process for identifying them.

Sampling of bandwidth limited signals at less than the Nyquist Sample Rate is known as *undersampling*, *band-pass sampling* and *super-Nyquist sampling*. Importantly, as well as allowing for communications signals up to very high frequencies to be sampled, undersampling has another significant advantage that makes it ideal for SDR. When the undersampling frequency is twice the signal's bandwidth, one of the sampled signal's aliases occurs at the same frequency as the original message used to modulate it. In other words, undersampling demodulates the sampled signal. All that need be done to recover the original message is to pass it through a low-pass filter to filter out the higher frequency aliases.

The experiment

For this experiment you'll use the Emona DATEx to set up a bandwidth limited signal then use it to explore the difference in the spectral composition of a sampled signal produced using a variety of sampling frequencies above and below the Nyquist Sample Rate. You'll then use undersampling to demodulate the bandwidth limited signal and recover the message. Finally, you'll explore the effects on the recovered message of mismatches between the modulated carrier's bandwidth and the frequency used for undersampling.

It should take you about 40 minutes to complete this experiment.

Equipment

- Personal computer with appropriate software installed
- NI ELVIS II plus USB cable and power pack
- Emona DATEx experimental add-in module
- Two BNC to 2mm banana-plug leads
- Assorted 2mm banana-plug patch leads
- One set of headphones (stereo)

 © 2008 Emona Instruments

Part A – Setting up a bandwidth limited signal

To experiment with undersampling you need a bandwidth limited signal. Any of the modulation schemes can be used for this purpose, but for simplicity of wiring, we'll use a DSBSC signal. The first part of the experiment gets you to set one up.

Procedure

1. Ensure that the NI ELVIS II power switch at the back of the unit is off.

2. Carefully plug the Emona DATEx experimental add-in module into the NI ELVIS II.

3. Set the *Control Mode* switch on the DATEx module (top right corner) to *PC Control*.

4. Connect the NI ELVIS II to the PC using the USB cable.

   Note: This may already have been done for you.

5. Turn on the NI ELVIS II power switch at the rear of the unit then turn on its *Prototyping Board Power* switch at the top right corner near the power indicator.

6. Turn on the PC and let it boot-up.

7. Launch the NI ELVISmx software.

8. Launch and run the NI ELVIS II Oscilloscope VI.

9. Set up the scope per the procedure in Experiment 1 ensuring that the *Trigger Source* control is set to *CH 0*.

10. Connect the set-up shown in Figure 1 below.

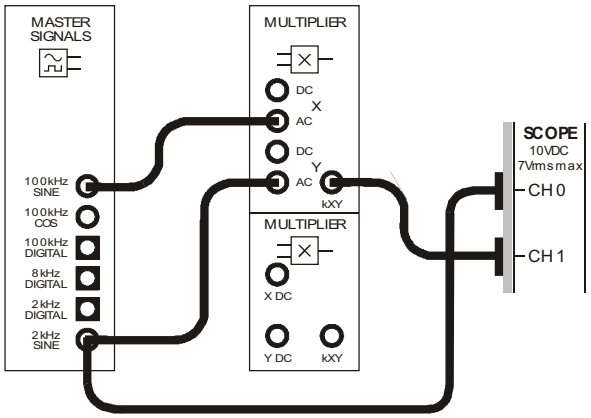

Figure 1

This set-up can be represented by the block diagram in Figure 2 below. It generates a 100kHz carrier that is DSBSC modulated by a 2kHz sinewave message.

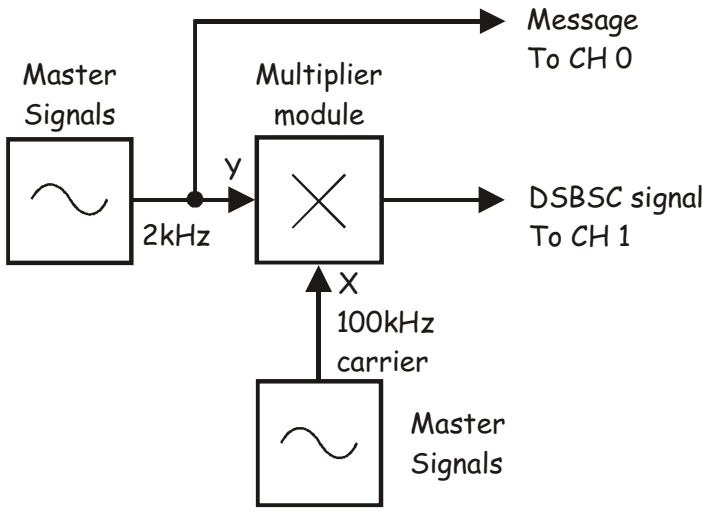

Figure 2

11. Adjust the scope's *Timebase* control to view two or so cycles of the Master Signals module's *2kHz SINE* output.

12. Activate the scope's Channel 1 input to view the DSBSC signal out of the Multiplier module as well as the message signal.

13. Set the scope's Channel 0 *Scale* control to the *1V/div* position and the Channel 1 *Scale* control to the *2V/div* position.

    Note: The Multiplier module's output should be DSBSC signal with alternating halves of its envelope forming the same shape as the message.

    Question 1
    For the given inputs to the Multiplier module, what are the frequencies of the two sinewaves that make up the DSBSC signal?

    Question 2
    What's the bandwidth of the DSBSC signal?

    ---

14. Suspend the scope VI's operation by clicking on its *STOP* control once.

15. Launch and run the NI ELVIS II Dynamic Signal Analyzer VI.

16. Adjust the signal analyzer's controls as follows:

    Input Settings

    - *Source Channel* to *SCOPE CH 1*
    - Voltage Range to ±10V

    FFT Settings

    - *Frequency Span* to *150,000*
    - *Resolution* to *400*
    - *Window* to *7 Term B-Harris*

    Averaging

    - *Mode* to *RMS*
    - *Weighting* to *Exponential*
    - *# of Averages* to *3*

    Trigger Settings

    - *Type* to *Edge*

    Frequency Display

    - *Units* to *dB*
    - *Mode* to *RMS*
    - *Scale* to *Auto*
    - *Cursors On* box unchecked (for now)

17. Verify your answers to Questions 1 and 2 by using the signal analyzer's cursors to determine the frequency of the DSBSC signal's two sidebands.



Ask the instructor to check your work before continuing.

Part B – Direct down-conversion using undersampling

If you have successfully completed the experiment on sampling and reconstruction (Experiment 13) you have seen that the mathematical model that defines the sampled signal is:

$$\text{Sampled signal} = \text{the sampling signal} \times \text{the message}$$

As the sampling signal is a digital signal, the expression can be rewritten as:

$$\text{Sampled signal} = (\text{DC} + \text{fundamental} + \text{harmonics}) \times \text{message}$$

When the message signal is modulated carrier like the DSBSC signal that you have set up, the expression can be rewritten as:

$$\text{Sampled signal} = (\text{DC} + \text{fundamental} + \text{harmonics}) \times (\text{LSB} + \text{USB})$$

Solving the expression (which necessarily involves trigonometry that is not shown here) gives:

- Duplicates of the LSB and USB (due to their multiplication with sampling signal's DC component)
- Aliases of the LSB and USB at frequencies equal to the sum and difference of their frequencies and the sampling signal's fundamental frequency
- Numerous other aliases of the LSB and USB at frequencies equal to the sum and difference of their frequencies and the sampling signal's harmonic frequencies

 © 2008 Emona Instruments

Recall that the math also proves that, where a low-pass filter is being used to reproduce the original signal by plucking its equivalent out of the sampled signal, the sampling rate must be at least twice the highest frequency in the original signal. If the sampling rate is less than this, aliasing occurs.

At first glance then, this suggests that if the DSBSC signal that you have generated is to be sampled, the sampling rate must be at least 204kHz because of the upper sideband is a 204kHz sinewave.

However, as the DSBSC signal is bandwidth limited (that is, its spectral composition doesn't extend down to DC), it's possible to sample at rates lower than 204kHz without necessarily causing aliasing. For proof, Table 1 shows some of the aliases produced by sampling the DSBSC signal at 150kHz.

Table 1

Components due to DC	Components due to fs	Components due to 2fs	Components due to 3fs
98k & 102k	Diff: 48k & 52k Sum: 248k & 252k	Diff: 198k & 202k Sum: 398k & 402k	Diff: 348k & 352k Sum: 548k & 552k

Notice that none of the aliases overlap the 98kHz and 102kHz components in the sampled signal's spectral composition. The aliases are either below or above them. So, in this instance, aliasing wouldn't occur if a band-pass filter (with sufficiently steep skirts) is used to pluck the duplicate of the original DSBSC signal out of the sampled signal. That said, aliasing is still possible by choosing a sampling rate that produces aliases at frequencies that fall inside the band-pass filter's pass-band.

Obviously, as the sampling rate decreases, so too do all of the components in the sampled signal's spectrum. It makes sense then that, if the right undersampling frequency is used, it must be possible to produce aliases that centre on DC. This is crucial because it means that, when a modulated carrier is undersampled, one of its sidebands can be directly down-converted back to a baseband signal without needing to use an intermediate frequency first. All that is needed is a low-pass filter to reject the other aliases.

A more sophisticated way of understanding direct down-conversion using undersampling involves thinking of the sampling action as product detection. This is entirely appropriate to do because the math is almost identical – if you're not sure about that, compare the notes here with the notes in the preliminary discussion on product detection in Experiment 9. The difference is however, instead of multiplying the modulated carrier with a single local sinusoidal carrier, sampling involves multiplying it with dozens of sinewaves (the sampling signal's fundamental and harmonics). Importantly, as long as one of the harmonics is the same frequency as the modulated carrier, the explanation for a product detector applies equally to undersampling as a form of demodulation.

To ensure that one of the sampling signal's harmonics is the same frequency as the modulated carrier, the sampling rate must be a whole integer sub-multiple of the modulated signal's carrier frequency. That said, to avoid aliasing, the sampling rate must be at least twice the bandwidth limited signal's bandwidth.

The next part of this experiment lets you demodulate your DSBSC signal to recover the 2kHz message using undersampling instead of using a product detector.

18. Close the signal analyzer's VI.

19. Restart the scope's VI by clicking its *Run* control once.

20. Set the scope's Channel 1 *Scale* control to the *500mV/div* position.

21. Modify the set-up as shown in Figure 3 below.

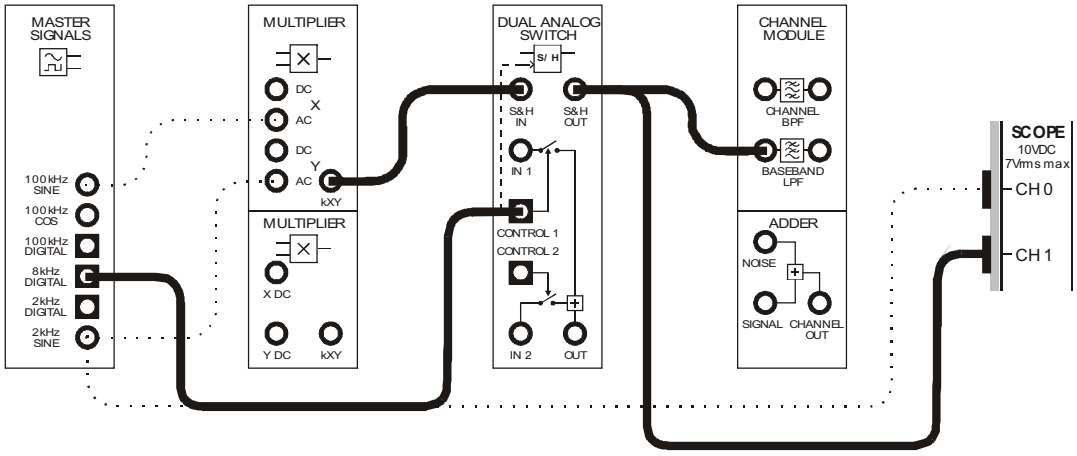

Figure 3

This set-up can be represented by the block diagram in Figure 4 on the next page. The Multiplier module is used to generate a modulated carrier (DSBSC). The Sample-and-Hold circuit together with the Baseband LPF is used demodulate it using undersampling.

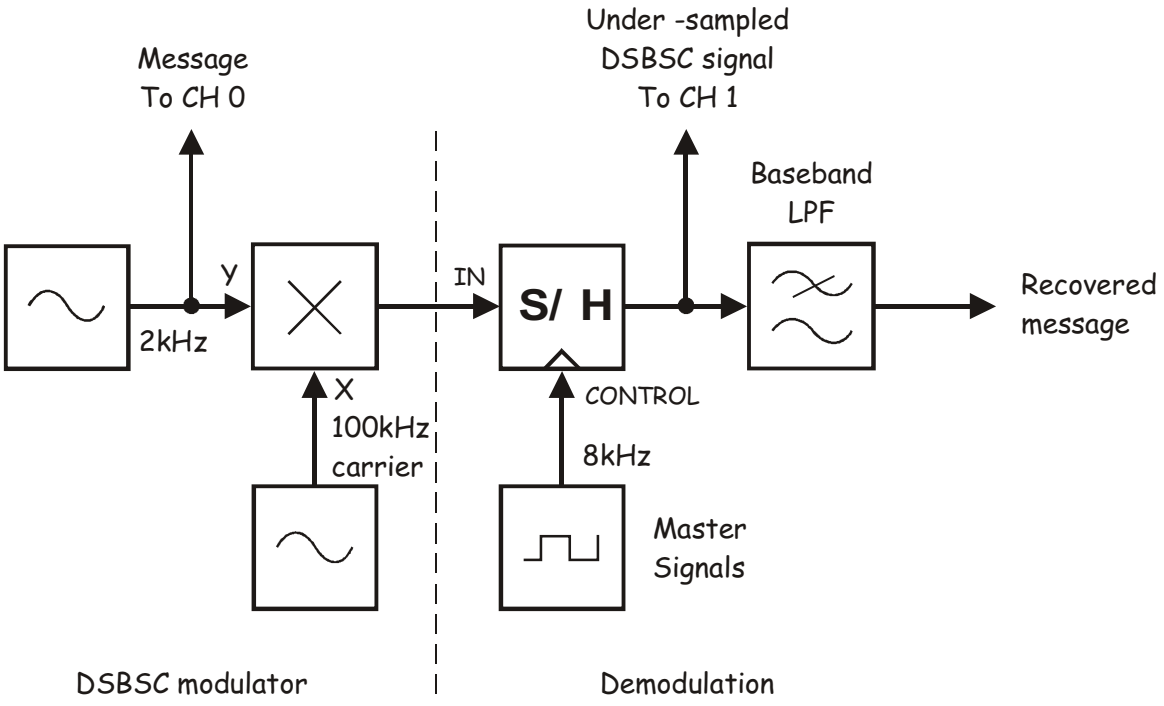

Figure 4

22. Compare the undersampled DSBSC signal with the original message.

    Note: If you look closely, the undersampled DSBSC signal looks a little like an inverted version of the original message.

23. Modify the scope's Channel 1 connection to the set-up as shown in Figure 5 below.

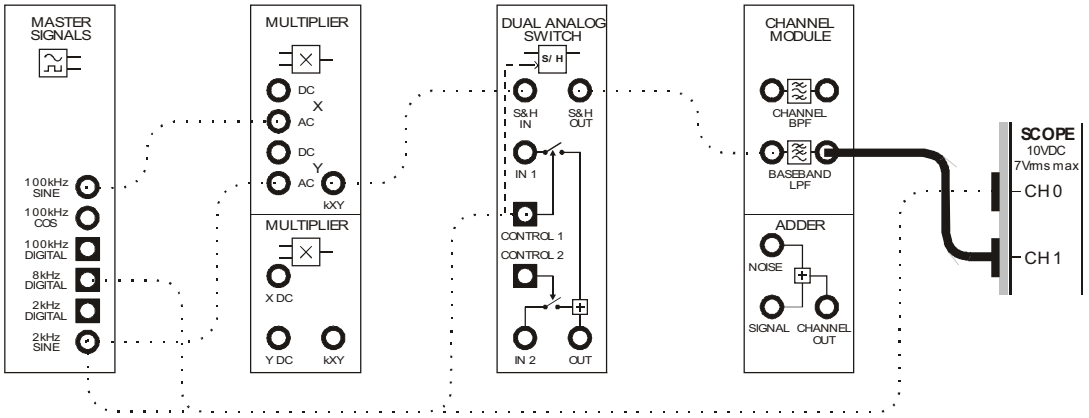

Figure 5

Question 3
What's the significance of the signal on the Baseband LPF's output?

Question 4
Given the sampling frequency is 8.333kHz (the signal's specified value of 8kHz is rounded down for simplicity), which harmonic in the sampling signal is demodulating the DSBSC signal?



Ask the instructor to check your work before continuing.

© 2008 Emona Instruments

Part C – Synchronisation

Recall that transmitter and receiver carrier synchronisation is essential to successful demodulation using product detection. If the local carrier of a product detector has even the slightest frequency or phase error (relative to the modulated carrier), the demodulated signal is affected.

Phase errors can reduce the magnitude of the recovered message and even result its complete cancellation. The effect of frequency errors depends on size. If the error is small (say 0.1Hz) the message is periodically inaudible but otherwise intelligible. If the frequency error is larger (say 5Hz) the message is reasonably intelligible but fidelity is poor. When frequency errors are large, intelligibility is seriously affected. (For a brief explanation of why these effects occur, refer to Part E in Experiment 9.)

As direct down-conversion using undersampling is a form of product detection, the sampling signal must be synchronised to the modulated carrier if these effects are to be avoided. The next part of the experiment let's you see these effects for yourself.

24. Launch and run the NI ELVIS II Function Generator VI.

25. Adjust the function generator for an 8.333kHz output.

    Note: It's not necessary to adjust any other controls as the function generator's *SYNC* output will be used and this is a digital signal.

26. Disconnect the plug to the Master Signal module's *8kHz DIGITAL* output.

27. Modify the set-up as shown in Figure 6 below.

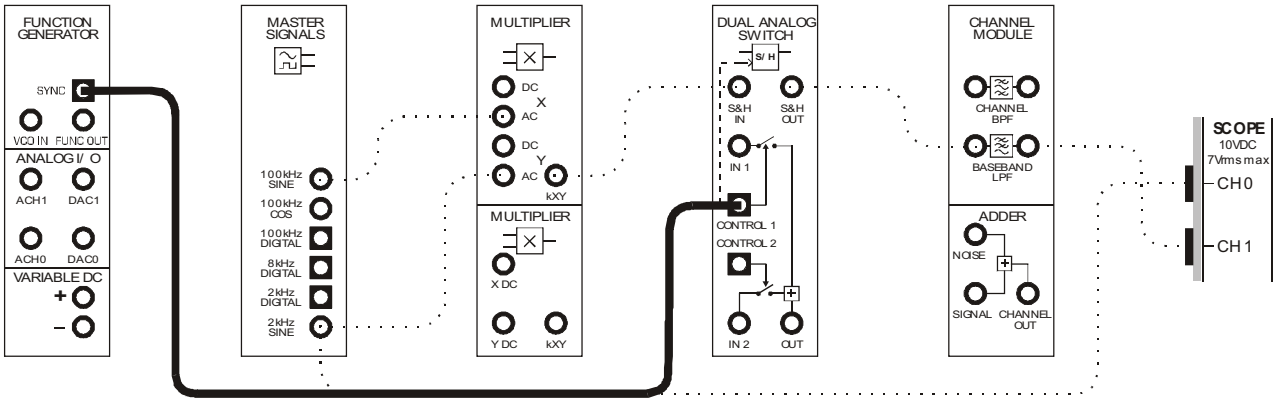

Figure 6

This modification substitutes the Master Signals module's *8kHz DIGITAL* output for an 8.333kHz digital signal from the function generator. This allows you to introduce a phase and frequency error between the modulated carrier and the "local carrier" (that is, the sampling frequency's 12th harmonic).

28. Observe the effect of this change on the recovered message.



Ask the instructor to check your work before finishing.

© 2008 Emona Instruments



Emona DATEx™ Telecommunications Trainer Lab Manual Volume 1 - Experiments in Modern Analog and Digital Telecommunications For NI™ ELVIS II.

Author: Barry Duncan

Emona Instruments Pty Ltd	
78 Parramatta Road	web: **www.emona-tims.com**
Camperdown NSW 2050	telephone: +61-2-9519-3933
AUSTRALIA	fax: +61-2-9550-1378