802.11a System Simulation using SystemView by Elanix

Maurice L. Schiff. Ph.D.
Chief Scientist, Elanix, Inc.

Introduction

This application note describes a simulation of an 802.11a, IEEE Std 802.11a-1999, Wireless LAN system as performed in SystemView by Elanix. These examples provide the user the ability to perform a complete end-to-end simulation. The data packet consists of an 8usec short preamble, followed by an 8usec long preamble, followed by the data. This article will describe each of these elements.

Data Modulation

The suite of modulation parameters valid for the 802.11a system is given in **Table 1**. In this example the [36Mbps –16QAM-Rate ¾], option will be presented.

The overall block diagram is shown in **Figure 1**. The 36 Mbps data source (token 10) is first sampled at once per bit (token 11). Token 12 is the [131,171] constraint length 7 convolutional encoder. The data out of the encoder is 72Mbps. Token 13 follow this, which performs the puncturing operation. The net effect is that for every 3 bits into the convolutional encoder, there are 4 bits out of the puncture token. Thus the rate is now 48 Mbps. The data is then interleaved in token 27. The bit-to-symbol token 14 and the QMAP token 16 combine to produce the proper baseband I and Q signals. The symbol rate is 12 Msym/sec.

Now assemble the data into the required packet structure. The General DeMux token 18 splits the data symbols into the appropriate segments for use by the GenMux token 19. **Figure 2** shows the parameters of the DeMux token 18. The Gen Mux token 19 assembles the packet for the I signal (a similar discussion applies to the Q signal). **Figure 3** is the Gen Mux token parameters. It will be recognized as the packet structures resulting in 13 segments total with segments (1,2,3,5,6,7) as 48 data sub carriers per symbol; segments (2,4,8,10) carrying the sync data; segment (7) which is the center frequency set to 0, and segments (0, 13) are 0 fillers.

There are 4bits/QAM-sym:
48sym = 192 = NBPSC (see **Table 1**.)

The number of data bits per symbol is:
NDBPS = ¾ NBPSC = 144 (see **Table 1**.)

The sync data is controlled by a 7 stage PN source (token 16) described by the polynomial. The total is 64 carriers required by the OFDM symbol modulator. **Figure 4** shows an 'eye' diagram of the constructed packet. The 4 pilot carriers, which are BPSK modulated, are clearly visible, as is the null carrier in the center. The final I and Q signals are then sent to the OFDM modulator token 5. The parameters are shown in **Figure 5**. The final modulated spectrum is shown in **Figure 6**. The demodulation process is also shown in **Figure 1**. The steps just described for the modulation process are applied in reverse order to recover the original data.

Data rate (Mbits/sec)	Modulation	Coding rate (R)	Coded bits per subcarrier (N_{BPSC})	Coded bits per OFDM symbol (N_{CBPS})	Data bits per OFDM symbol (N_{DBPS})
6	BPSK	1/2	1	48	24
9	BPSK	3/4	1	48	36
12	QPSK	1/2	2	96	48
18	QPSK	3/4	2	96	72
24	16-QAM	1/2	4	192	96
36	16-QAM	3/4	4	192	144
48	64-QAM	2/3	6	288	192
54	64-QAM	3/4	6	288	216

Table 1. 802.11a Modulation Parameters

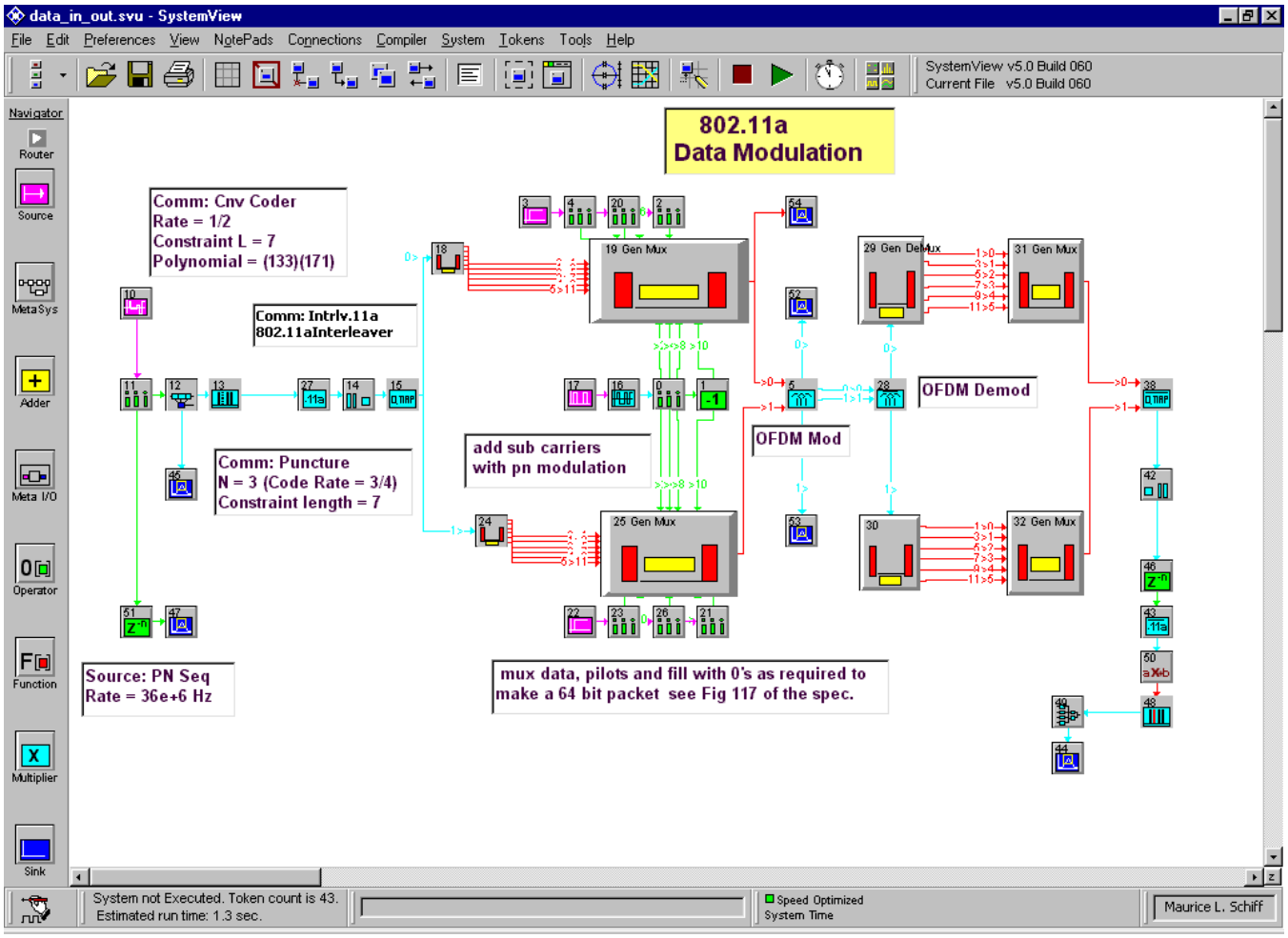

Figure 1. 36 Mbps 802.11a Modulation/Demodulation Simulation

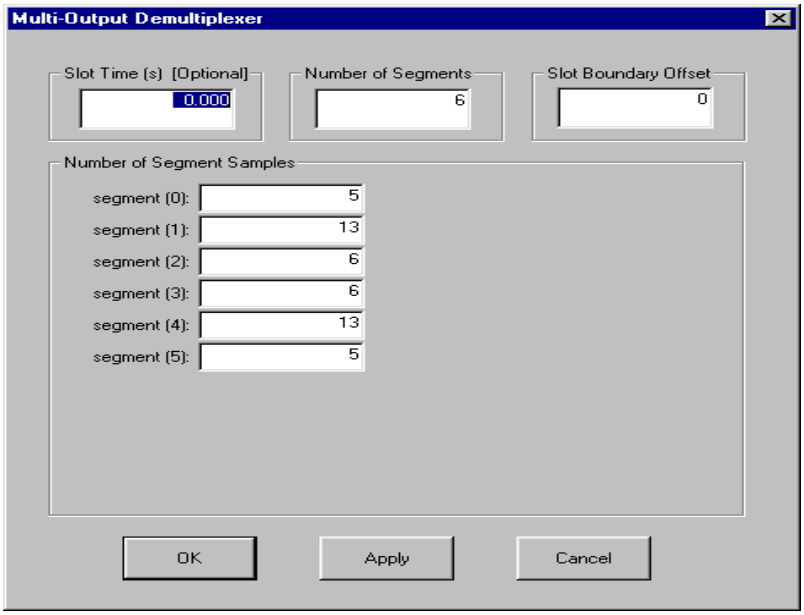

Figure 2. Data DeMux Token Parameters

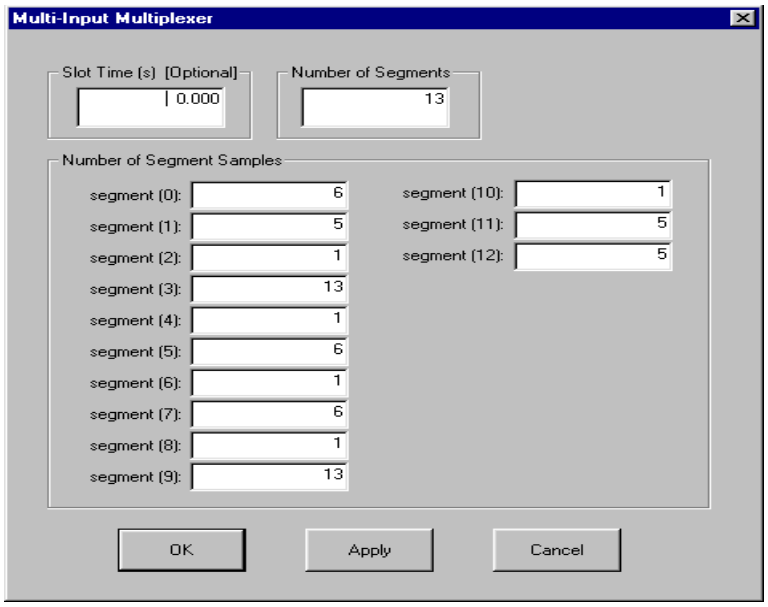

Figure 3. Packet Generator Mux

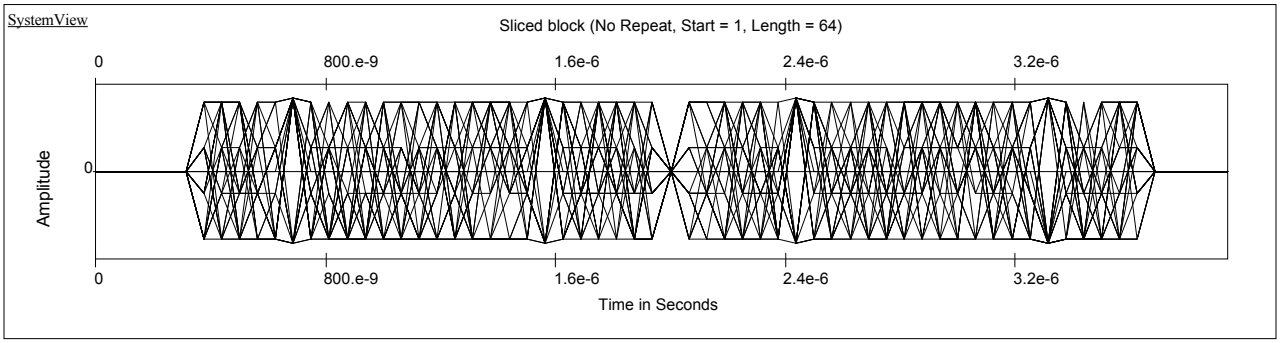

Figure 4. Packet 'eye' Diagram

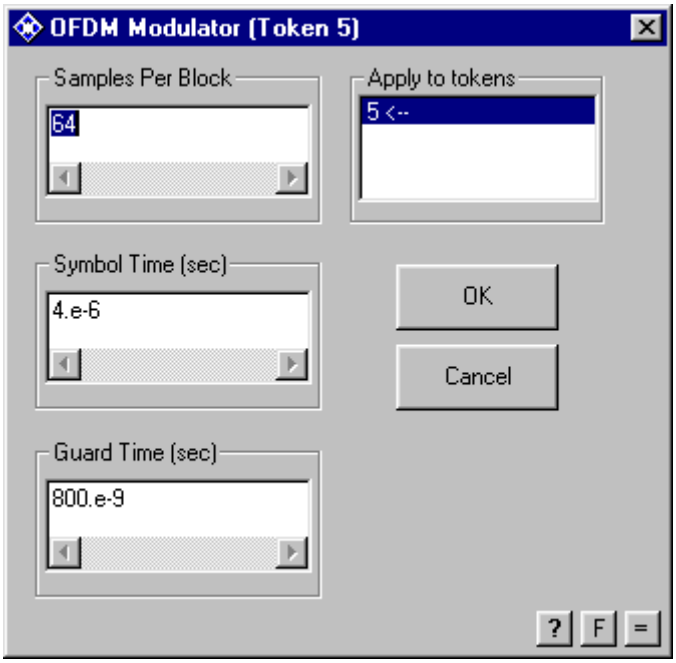

Figure 5. OFDM Modulation Parameters

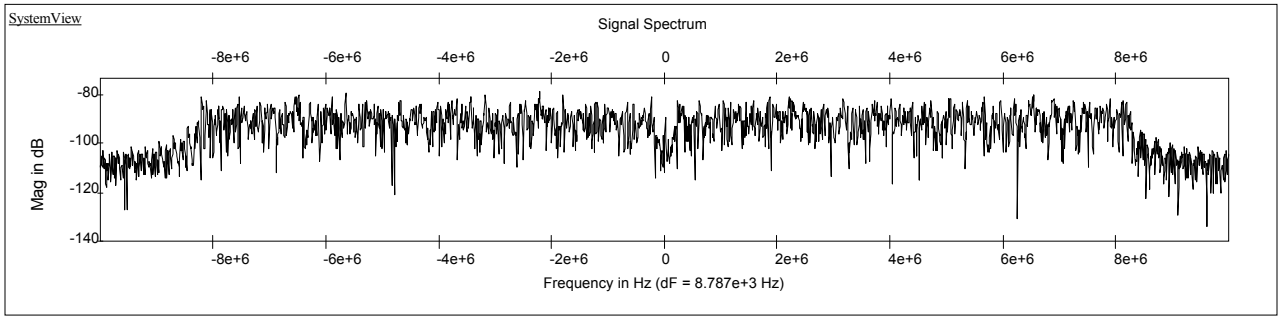

Figure 6. Modulated Spectrum

Short Sync

The short sync is a ten-fold repetition of an .8usec OFDM symbol. The simulation block diagram for the OFDM modulator are shown in **Figure 7**. Note that there is no cyclic extension for this mode. The input frequency data is entered in 12 sub carries. The output time data is shown in **Figure 8**. This output agrees with Table G.3 of the specification.

Long Sync

The long is comprised of two 3.2usec symbols with a 1.6usec guard interval. The simulation block diagram for the long sequence is shown in **Figure 9**, and is shown in **Figure 10**. The 56 data carries frequency information is encoded in Token 3. Finally **Figure 11** shows the corresponding time data, which agrees with Table G.5 of the specification.

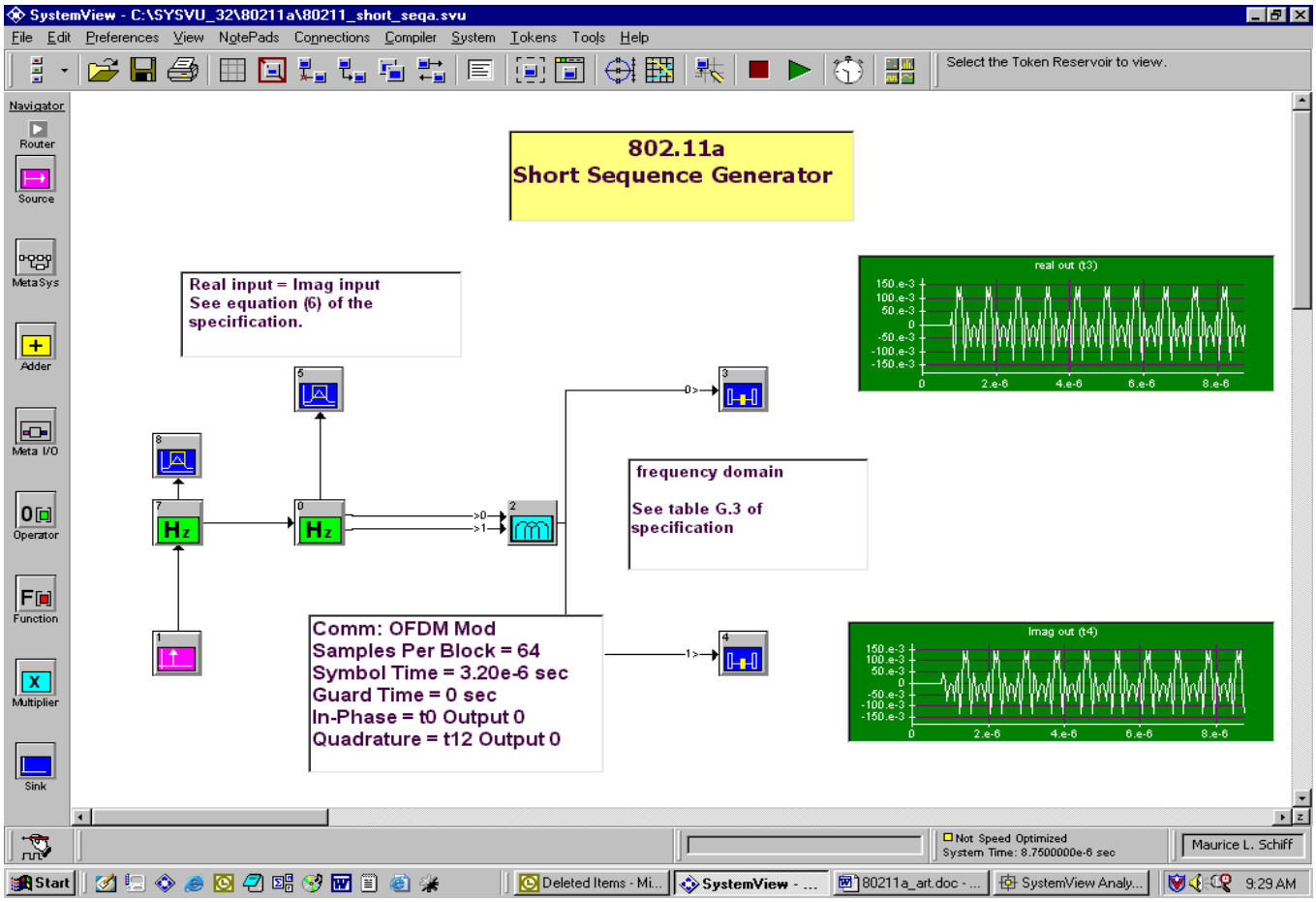

Figure 7. Short Sync Simulation Block Diagram

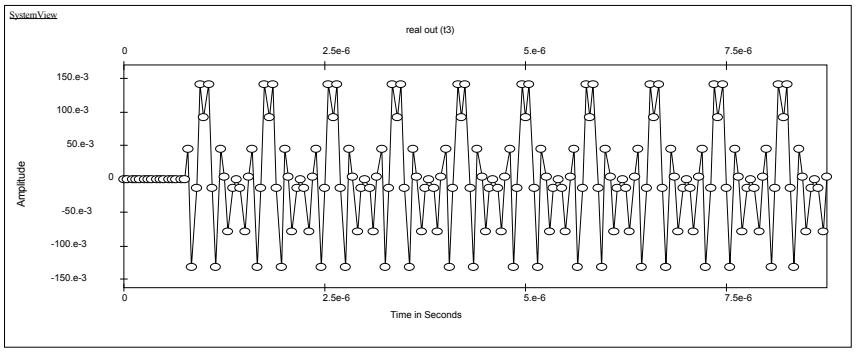

Figure 8. Short Sync Time Data (real)

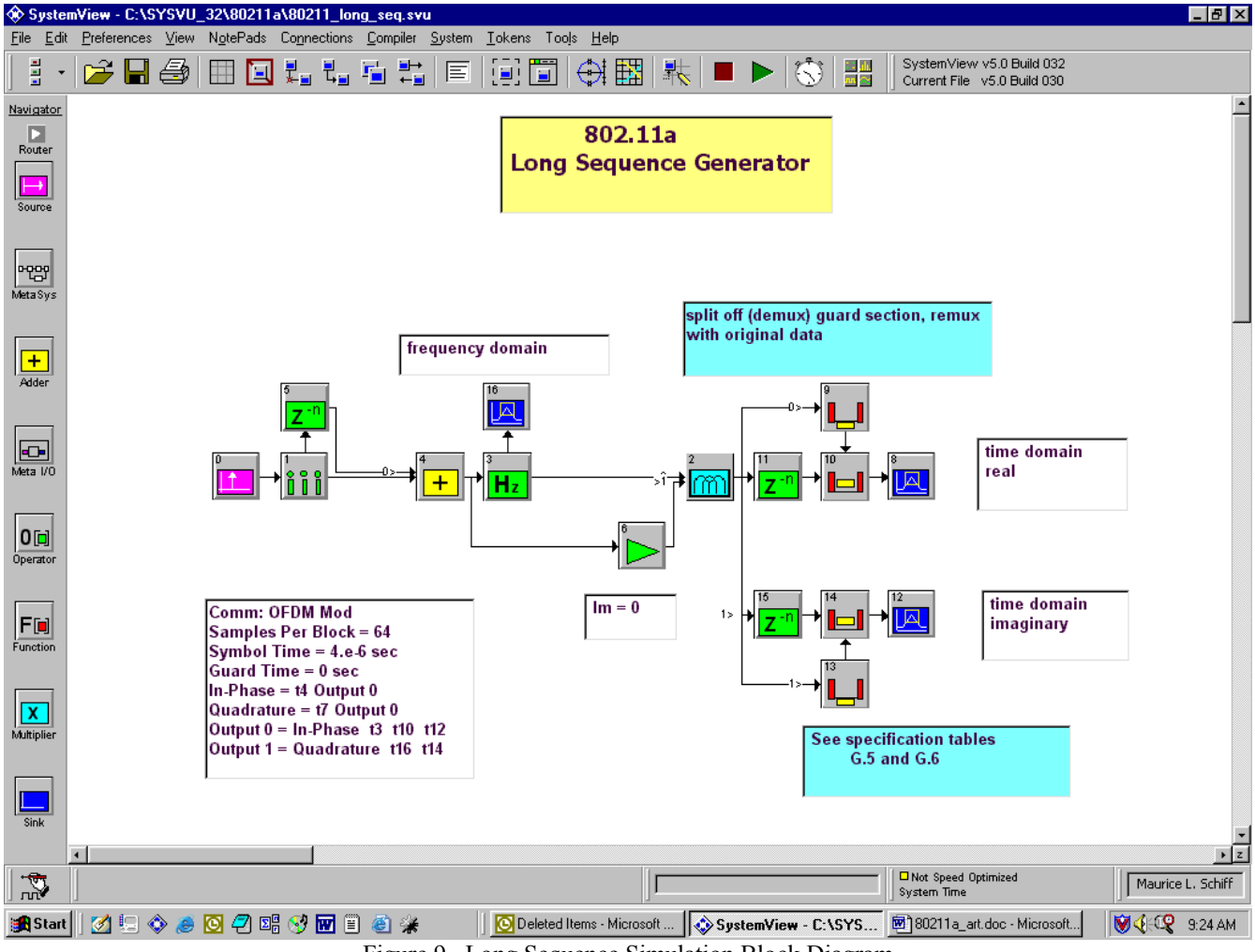

Figure 9. Long Sequence Simulation Block Diagram

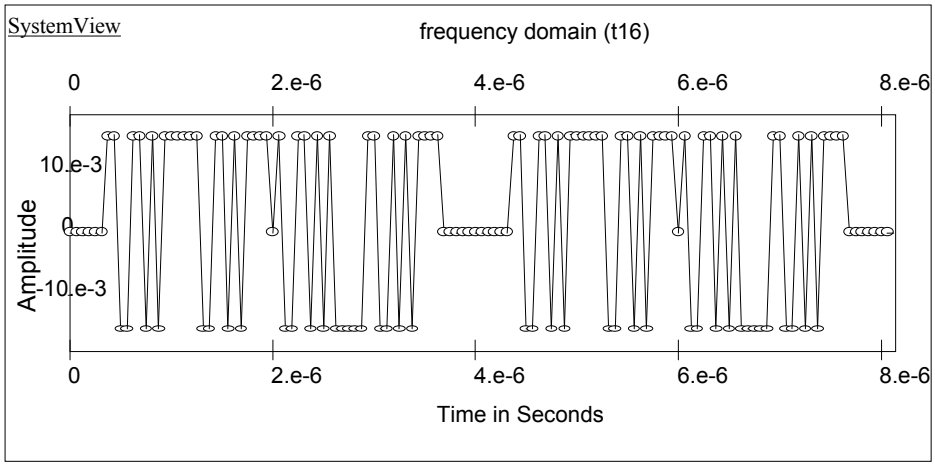

Figure 10. Long Sync Frequency Data

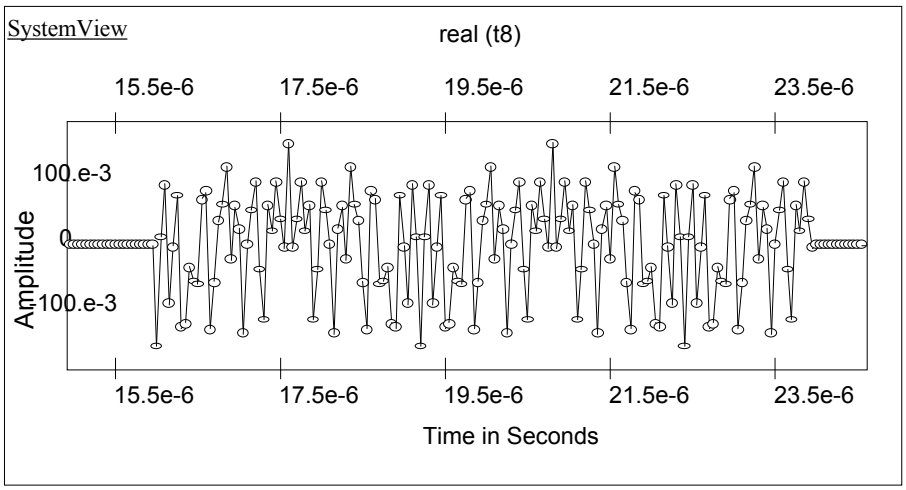

Figure 11. Long Sync Time Data (real)

Conclusion

This article has described the simulation of an 802.11a system using SystemView by Elanix. From the three segments described here a complete end-to-end simulation can be developed.

More Information

For more information on SystemView simulation software please contact:

ELANIX, Inc.
5655 Lindero Canyon Road, Suite 721
Westlake Village CA 91362.
Tel: (818) 597-1414
Fax: (818) 597-1427

Or visit our web home page (www.elanix.com) to down load an evaluation version of the software that can run this simulation as well as other user-entered designs.