# Business Data Communications and Networking

11th Edition

Jerry Fitzgerald and Alan Dennis

John Wiley & Sons, Inc

**Dwayne Whitten, D.B.A**
**Mays Business School**
**Texas A&M University**

**Copyright 2011 John Wiley & Sons, Inc**

# Chapter 9

# The Internet

Copyright 2011 John Wiley & Sons, Inc

# Outline

**9.1 – Introduction**

**9.2 - How the Internet Works**

- **Basic Architecture, Connecting to an ISP, The Internet Today**

**9.3 - Internet Access Technologies**

- **DSL, cable modems, Fiber to the Home, and WiMAX**

**9.4 – The Future of the Internet**

- **Internet Governance & Building for the Future**

**9.5 - Implications for Management**

Copyright 2011 John Wiley & Sons, Inc

# 9.1 Introduction to the Internet

- **Most used network in the world**
- **Not one network, but a network of networks**
- **Made up of thousands of networks of**
  - **National and state government agencies,**
  - **Non-profit organizations and for-profit companies.**
- **A rigidly controlled club**
  - **To exchange data, these networks must agree to use Internet protocols**
  - **TCP/IP MUST be supported by all networks**
- **Unrestricted applications and contents**
  - **Developed freely**

Copyright 2011 John Wiley & Sons, Inc

# 9.2 How the Internet Works

Copyright 2011 John Wiley & Sons, Inc

# Internet's Hierarchical Structure

- **Tier 1 Internet Service Providers (ISPs) (aka National ISP)**
  - **Provide services to their customers and sell access to tier 2 and 3 ISPs**
- **Tier 2 ISPs (Regional ISP)**
  - **Connect with tier 1 ISPs**
  - **Provide services to their customers and sell access to local ISPs**
- **Tier 3 ISPs (Local ISP)**
  - **Connected to tier 1 or 2 ISPs**
  - **Sell access to individuals**

Copyright 2011 John Wiley & Sons, Inc

# Internet's Access Points

- **Network Access Points (NAPs)**
  - **Connect tier 1 ISPs together**
  - **Sometimes large tier 2 and 3 ISPs also have access directly to NAPs**
    - **Indiana University, for example, which provides services to about 40,000 individuals, connects directly to the Chicago NAP**
  - **About a dozen NAPs in the U.S.**
  - **Run by common carriers such as Sprint and AT&T**
- **Metropolitan Area Exchanges (MAEs)**
  - **Connect tier 2 ISPs together**

Copyright 2011 John Wiley & Sons, Inc

# Basic Internet Architecture

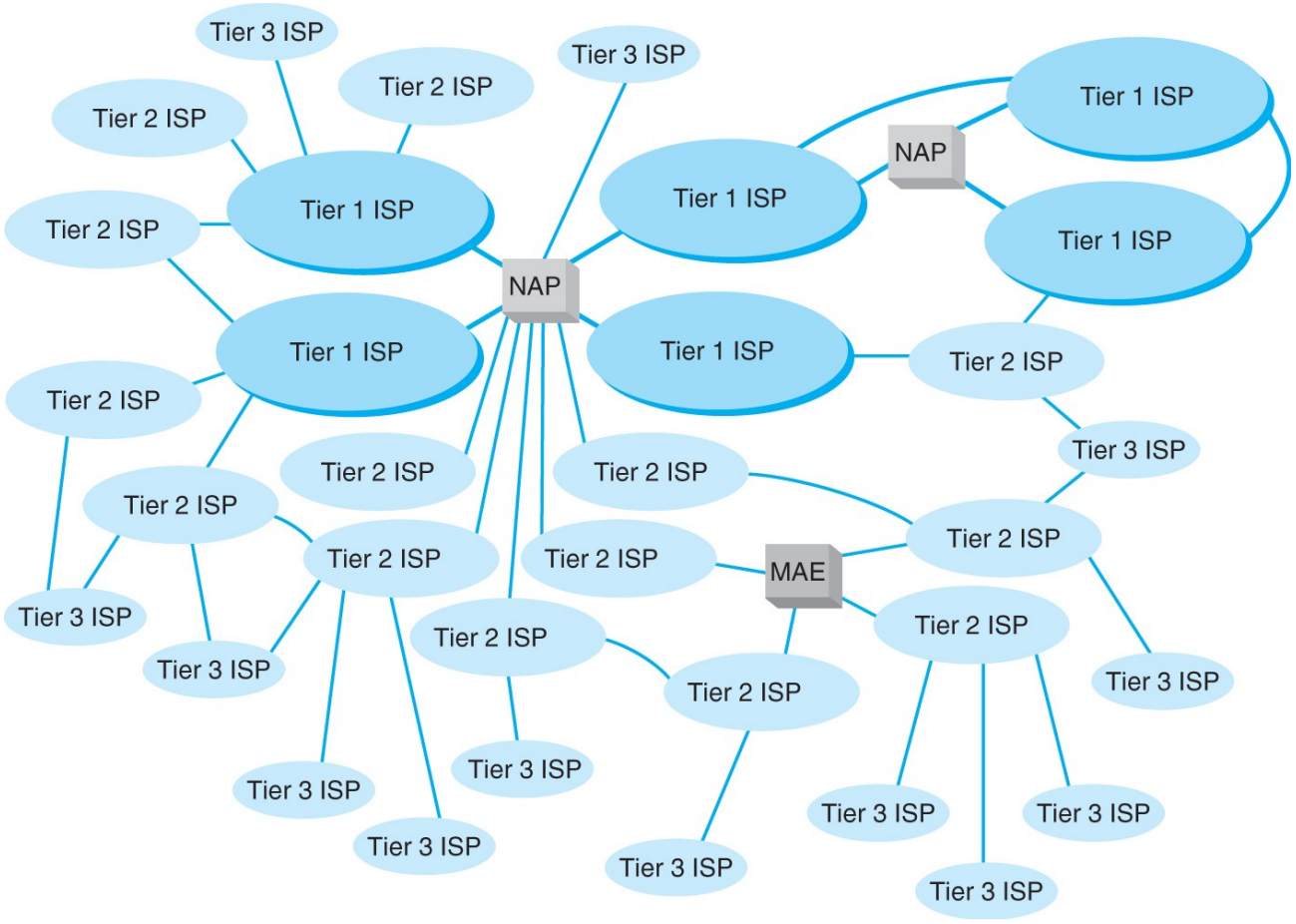


Copyright 2011 John Wiley & Sons, Inc

# Packet Exchange Charges

- **Peering**
  - **ISPs at the same level usually do not charge each other for messages**

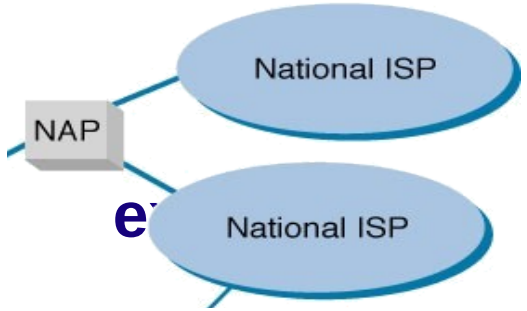


- **Higher level ISPs charge lower level ISPs**
- **Tier 3 ISPs charge individuals and corporate users for access**




Copyright 2011 John Wiley & Sons, Inc

# Connecting to an ISP

- **Done by through ISP's Point of Presence (POP)**
  - **A place at which ISP provides service to its customers**
- **Individual users**
  - **Typically through cable or DSL**
    - **Userid and password checked by Remote Access Server (RAS)**
    - **Once logged in, the user can send packets**
- **Corporate users**
  - **Typically access the POP using a T-1, T-3 or ATM OC-3 connections provided by a common carrier**
    - **Cost = ISP charges + circuit charges**

Copyright 2011 John Wiley & Sons, Inc

# Inside an ISP POP

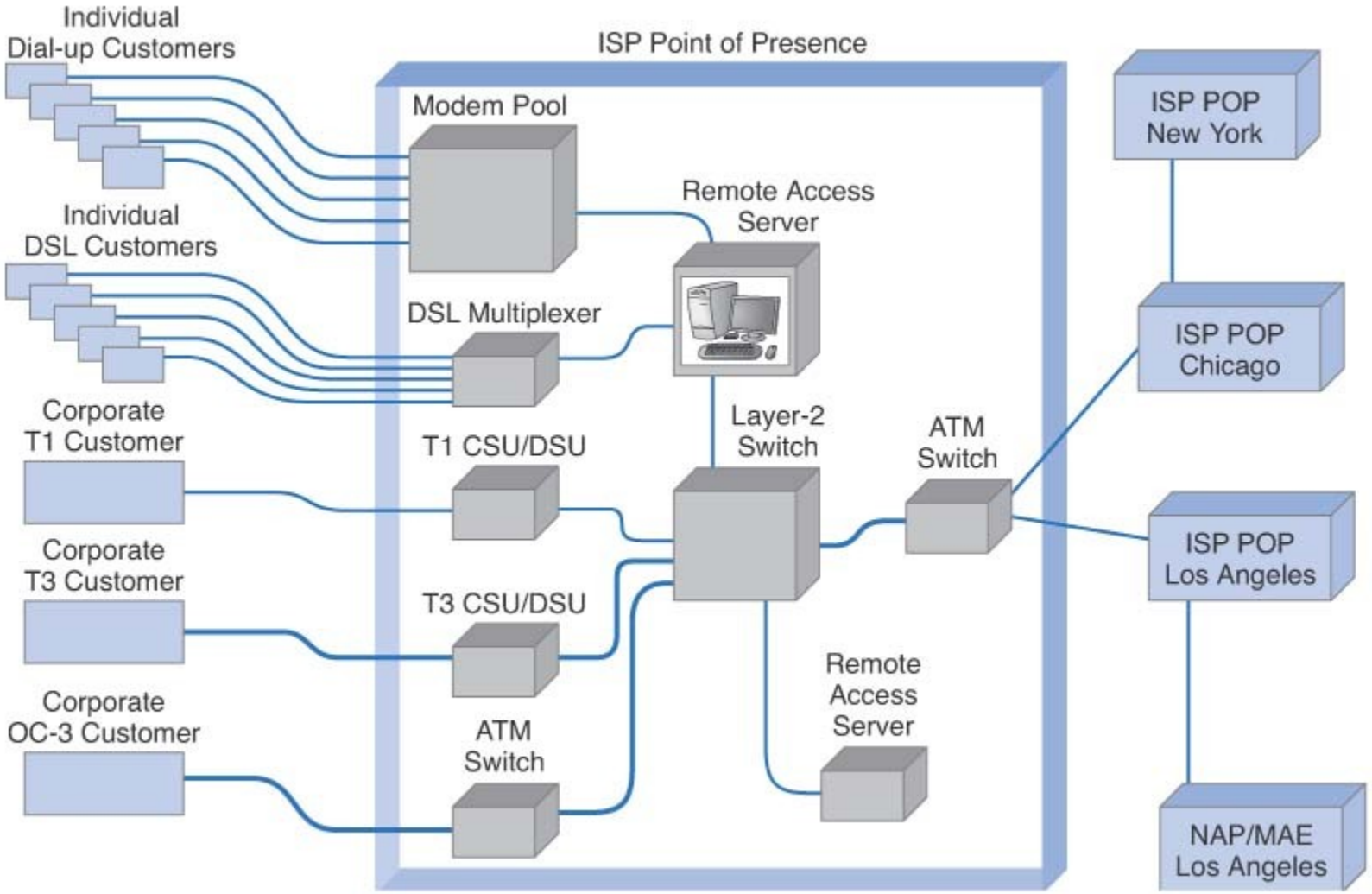


- **CSU/DSU: Channel Service Unit / Data Service Unit**

# Internet Backbones

- **Backbone circuits for national ISPs**
  - **OC-48 and OC-192 (10 Gbps) becoming more common**
  - **Larger backbones converting to OC-192 (10 Gbps)**
  - **OC-768 (40 Gbps) and use OC-3072 (160 Gbps) in experiment stage**
- **Aggregate Internet traffic**
  - **Growing rapidly**
  - **Internet traffic was about 80 Terabits per second (Tbps) in 2011.**
  - **NAPs and MAEs becoming bottlenecks**
    - **Requiring larger and larger switches**
- **www.navigators.com/isp.html**

Copyright 2011 John Wiley & Sons, Inc

# Sprint's Internet Backbone

- **A tier 1 ISP in North America**
- **Circuits: mostly ATM OC-12; few  OC-48 and OC-192**

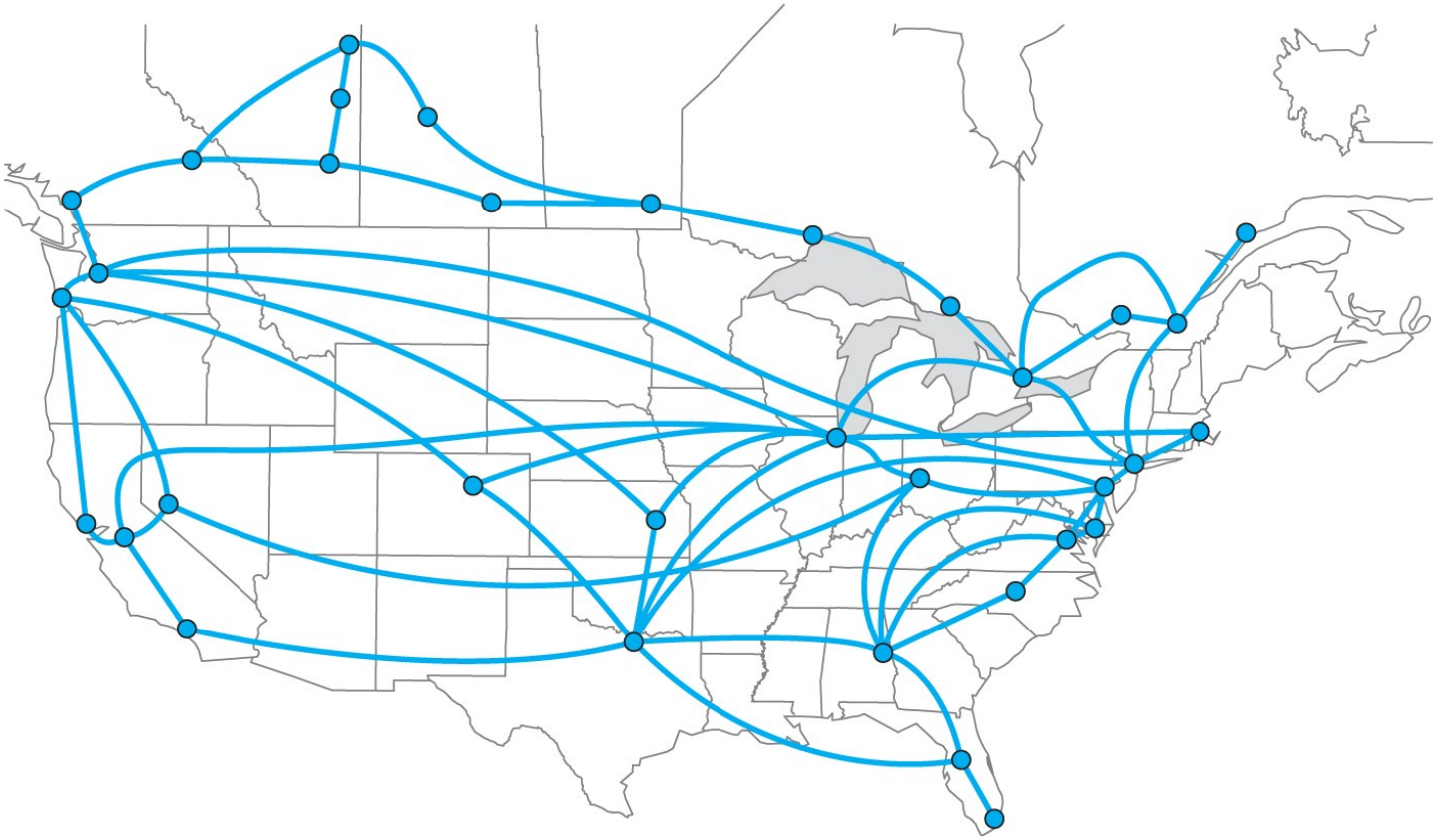

Copyright 2011 John Wiley & Sons, Inc

# 9.3 Internet Access Technologies

- **Internet access technologies**
  - **Most methods today are commonly called “broadband access”**
    - **Doesn’t refer to analog communication, rather it just means high speed**
  - **Digital Subscriber Line (DSL)**
  - **Cable Modems**

Copyright 2011 John Wiley & Sons, Inc

# Digital Subscriber Line (DSL)

- **A point-to-point technology**
- **Designed to provide high speed data transmission over traditional telephone lines**
  - **Traditional telephone lines (local loop)**
    - **Limited capacity due to telephone and switching equipment at the end offices**
    - **Constrained by 4 KHz voice channel**
    - **Much higher bandwidth possible (with new technology based equipment → DSL)**
- **Requires changing telephone equipment; not rewiring the local loop**
- **Not available in all locations in the US**
  - **More wide spread in Asia, Europe and Canada**

Copyright 2011 John Wiley & Sons, Inc

# Digital Subscriber Line (DSL)

- **Customer premises equipment (CPE) installed at customer location**
  - **Contains the line splitter**
    - **Directs traffic to phone network and DSL modem (aka DSL router)**
- **Local loops connect to the MDF**
  - **MDF (Main Distribution Frame aka Mainframe) splits neighorhood voice and data traffic to phone network and DSLAM (DSL access multiplexer)**

Copyright 2011 John Wiley & Sons, Inc

**A digital subscriber line access multiplexer (DSLAM, often pronounced dee-slam) is a network device, often located in the telephone exchanges of the telecommunications operators. It connects multiple customer digital subscriber line (DSL) interfaces to a high-speed digital communications channel**



Siemens DSLAM SURPASS hiX 5625

**In telephony, (MDF or main frame) is a signal distribution frame for connecting equipment (inside plant) to cables and subscriber carrier equipment (outside plant). The MDF is a termination point within the local telephone exchange where exchange equipment and terminations of local loops are connected by jumper wires at the MDF. All cable copper pairs supplying services through user telephone lines are terminated at the MDF**




JPX338A

JPX338B Type IDC (Insulation Displacement Connection)
Single Main Distribution Frame

JPX437



# DSL Architecture

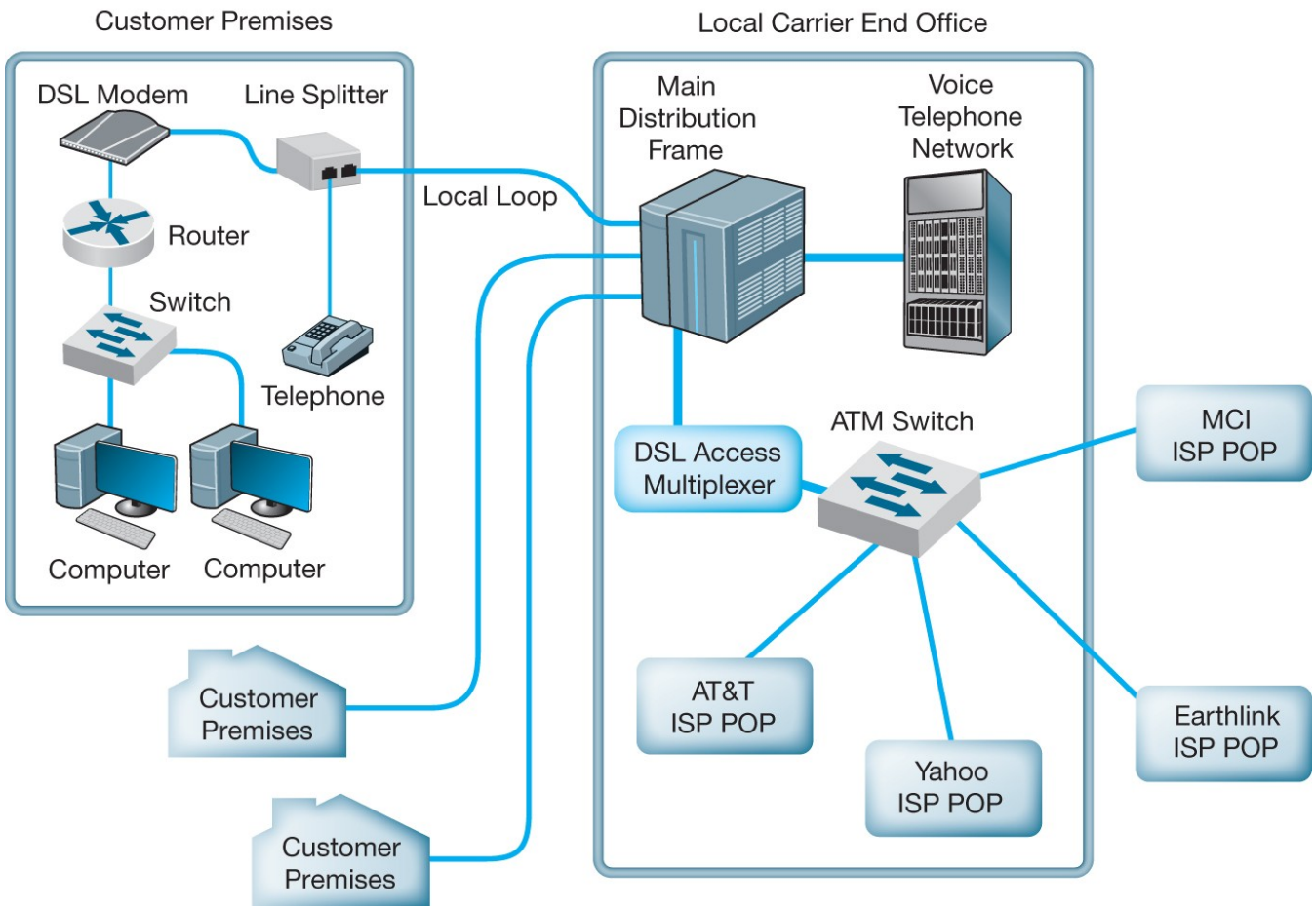


Copyright 2011 John Wiley & Sons, Inc

# Types of DSL

- **Asymmetric DSL (ADSL)**
  - **Most common**
  - **Uses frequency division multiplexing**
  - **Uses three FDM channels**
    - **4 KHz analog voice channel**
    - **A simplex data channel for downstream traffic**
    - **A slower duplex data channel for Upstream traffic**
  - **Size of digital channels**
    - **Depends on the distance (CPE-Office) (up to 18,000 ft)**
    - **Most common (T1): 1.5 Mbps down; 384 Kbps up**

Copyright 2011 John Wiley & Sons, Inc

# DSL Data Rates

| Maximum Downstream Rate | Maximum Upstream Rate |
|---|---|
| 1.5 Mbps | 384 Kbps |
| 6 Mbps | 640 Kbps |
| 12 Mbps | 1.5 Mbps |
| 18 Mbps | 1.5 Mbps |
| 24 Mbps | 3 Mbps |

Copyright 2011 John Wiley & Sons, Inc

# Cable Modems

- **A digital service offered by cable television companies**
- **Uses hybrid fiber coax**
- **Data Over Cable Service Interface Specifications (DOCSIS)**
  - **Most common protocol used for cable modems**
  - **Not a formal standard**
- **Offers vary (depends on the quality of cable plant)**
  - **In theory: downstream: 150 Mbps; upstream: 100 Mpbs**
  - **Typical: downstream: 1-10 Mbps; upstream 0.25 – 1 Mbps**

Copyright 2011 John Wiley & Sons, Inc

# Cable Modem Architecture

- **Similar to DSL (with one main difference):**
  - **DSL: point-to-point technology**
  - **Cable modems: use shared multipoint circuits**
    - **All messages on the circuit heard by all computers on the circuit → security issue**
    - **300 – 1000 customers per cable segment**
- **Type of equipment used**
  - **Cable Modem Termination System (CMTS)**
    - **Used for upstream traffic only**
    - **Converts data from DOCSIS to Internet protocols**
  - **Fiber Node with an Optical Electrical (OE) converter**
  - **Combiner (for downstream traffic only)**
    - **Combines Internet traffic with TV video traffic**

Copyright 2011 John Wiley & Sons, Inc

Fiber-Optic OE-EO Converter serves as a general purpose high-bandwidth fiber-optical converter. It contains an optical-to-electrical and an electrical-to-optical converter in one box.



NOAH's converter

# Basic Cable Modem Architecture

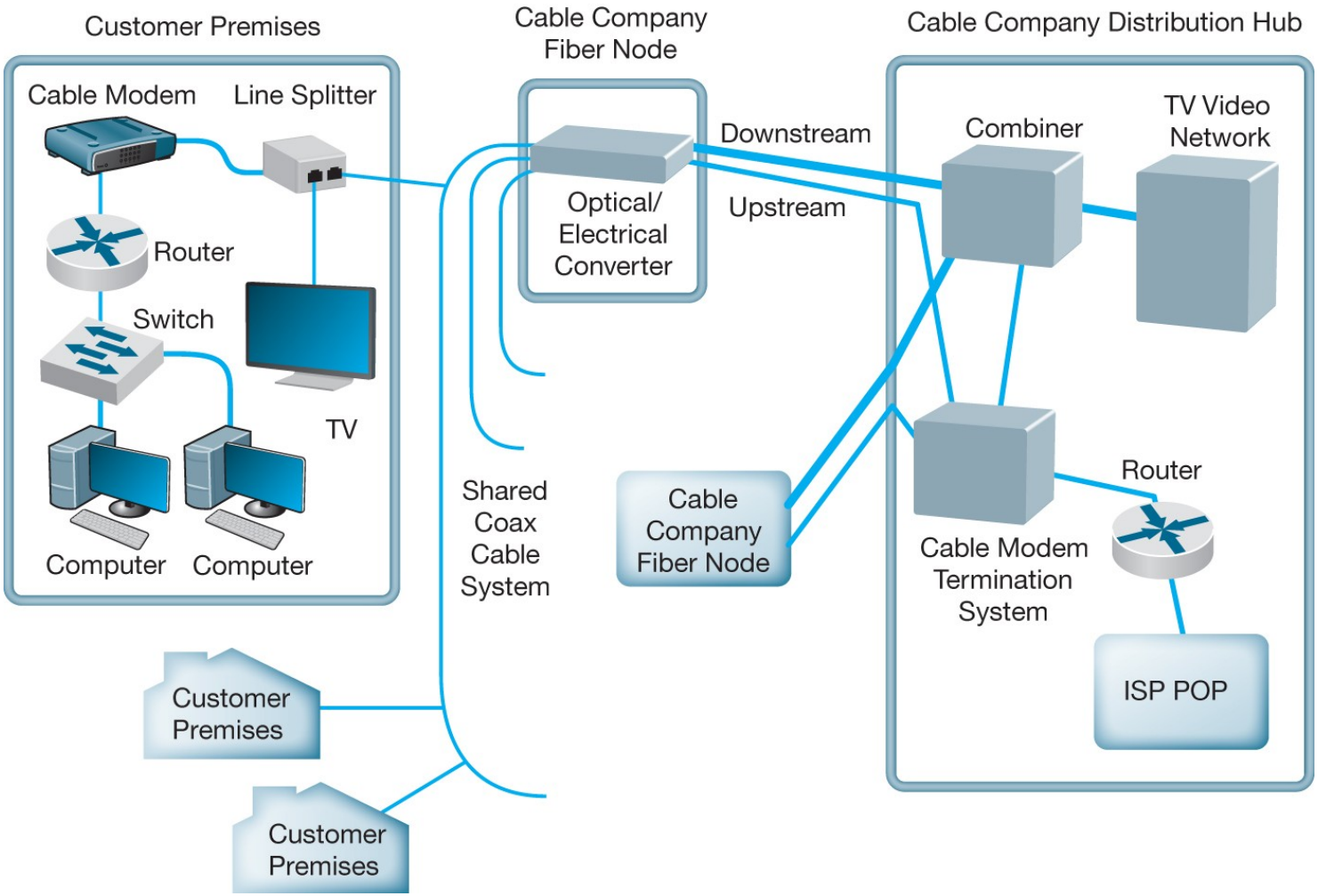


Copyright 2011 John Wiley & Sons, Inc

# Fiber to the Home

- **FTTH (fiber-to-the-home): Fiber reaches the boundary of the living space, such as a box on the outside wall of a home.**
- **A dedicated point-to-point fiber optic service**
- **As of 2011, 7 million US homes subscribed with another 10 million available**
- **An optical unit network (OUN) at the customer site acts as an Ethernet switch and a router**

- **Commonly provides**
  - **10-100 Mbps downstream**
  - **1-10 Mbps upstream**

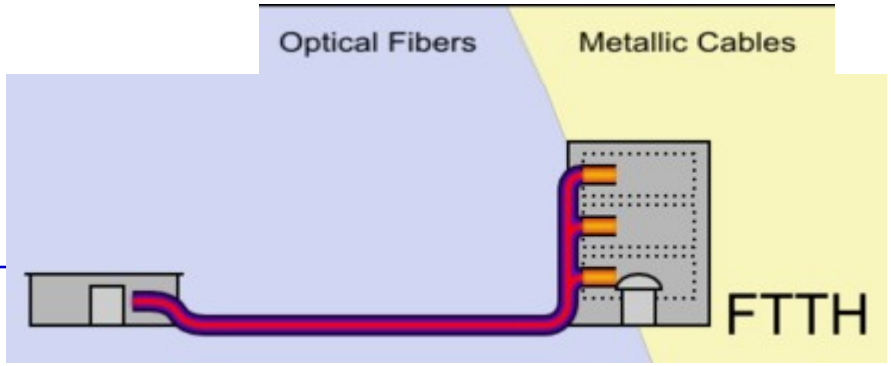

# WiMAX

- Users connected to the Internet through 3G networks, but now WiMax capabilities are being added to many laptops.

- WiMax (Worldwide Interoperability for Microwave Access) is a wireless technology that provides fast data-transfer rates over a wider area than Wi-Fi.

- WiMax is already finding adoption in developing countries and is now reaching the U.S. through companies like Sprint and Clearwire.

- WiMax service is available through adapters that can be plugged into laptop ports.
- Intel introduced its internal chip set for laptops to access WiMax networks.

# WiMAX

- **Wireless standard developed to connect to Ethernet LANs**
  - **Wireless 4G WiMAX technology delivers incredibly fast, city-wide access to the Internet at speeds four to ten times faster than 3G.**
- **Can be used as fixed or mobile wireless**
- **ISPs are beginning to provide this service**
- **Many mobile devices today use an Intel chip set**
  - **Possible with 3rd generation Intel® Core™ processors**
- **PCF media access is used (controlled)**
  - **Point coordination function is MAC technique used in IEEE 802.11. It resides in an AP to coordinate the communication within the network**
- **2.3, 2.5, and 3.5 GHz ranges, Max distance within range of 3-10 miles, Common data rate is 40 Mbps**

# 9.4 The Future of the Internet

Copyright 2011 John Wiley & Sons, Inc

# Internet Governance

- **No one organization operates the Internet**
- **Closest thing: Internet Society (ISOC)**
  - **Open membership professional society**
  - **Over 175 organizational and 8000 individual members in over 100 countries**
  - **Mission: "Open development, evolution and use of the Internet for the benefit of the people in the world."**
  - **ISOC work areas**
    - **Public policy:**
      - **Involves in debates in copyright, censorship, privacy**
    - **Education**
      - **Training and education programs**
    - **Standards**

Copyright 2011 John Wiley & Sons, Inc

# ISOC Standard Bodies

- **Internet Engineering Task Force (IETF)**
  - **Concerned with evolution of Internet architecture and smooth operation of Internet**
    - **The mission of the IETF is to make the Internet work better by producing high quality, relevant technical documents that influence the way people design, use, and manage the Internet**
    - **Public can submit a draft or proposal also**
    - **http://www.ietf.org/ (to search for docs and info)**

# ISOC Standard Bodies

- **Internet Engineering Steering Group (IESG)**
  **http://www.ietf.org/iesg/**
  - **Responsible for management of the standard process**
  - **Establishes and administers rules in creating standards**
  - **Example of focus: Applications Area (app)**
    - **The Applications Area has focuses on three clusters of protocols.**
      - **The first cluster contains application protocols that have been ubiquitous for some time but which continue to develop (e.g., email, HTTP, FTP).**
      - **The second cluster contains protocols which are used for Internet infrastructure (e.g., IDNA and EPP).**
      - **The third cluster contains "building block" protocols which are designed for re-use in a variety of more specific applications (e.g., LDAP, MIME types, URI schemes, URNs, OAuth, language tags).**
      - **Current working groups include topics such as: email, web foundations and security, calendaring, internationalization, virtual worlds, personal address books, simple resource manipulation protocol for devices in constrained networks, some helper technologies for network storage and peer-to-peer applications.**

# ISOC Standard Bodies

- **Internet Architecture Board (IAB)**
  - **Provides strategic architectural oversight, guidance**

**The Internet Architecture Board (IAB) is a committee of the Internet Engineering Task Force (IETF). Some of the responsibilities include:**

- **Architectural Oversight**: The IAB provides oversight of, and occasional commentary on, aspects of the architecture for the protocols and procedures used by the Internet.
- **Standards Process Oversight and Appeal**: The IAB provides oversight of the process used to create Internet Standards. The IAB serves as an appeal board for complaints of improper execution of the standards process through acting as an appeal body in respect of an IESG standards decision..
- **IRTF Chair**: The IAB selects a chair of the Internet Research Task Force (IRTF) for a renewable two year term.

# The Future of the Internet

- **Many new projects designing new technologies to evolve Internet including:**

  **1.) 1996 - Next Generation Internet (NGI) funded by NSF**

  **–A group called University Corporation for Advanced Internet Development (UCAID) started with 34 universities**

  **–Developed the Abilene network (aka Internet 2)**

  **2.) Advanced Research and Development Network Operations Center (ARDNOC) funded by Canadian government, Developed CA*Net**

Copyright 2011 John Wiley & Sons, Inc

# Backbone for Internet 2 and CA*net




Copyright 2011 John Wiley & Sons, Inc

# Features of Future Internet

- **Access via Gigapops, similar to NAPs**
  - **Operate at very high speeds (10 Gbps) using SONET, ATM and IPv6 protocols**
  - **Gigabit Point-of-presence, an access point to Internet2, the network collaboration between universities and partners in industry and government to develop advanced Internet technologies and applications such as telemedicine and digital libraries. Currently, over 170 U.S. universities take part using approximately 30 gigapops for access. Gigapops are distributed geographically across the United States and generally support data transfer rates of at least one gigabit per second (Gbps). One gigapop is intended to serve up to 12 participating institutions.**

Copyright 2011 John Wiley & Sons, Inc

# Features of Future Internet

- **IPv6 not IPv4**
- **New protocol development focuses on issues like**
  - **Quality of Service**
  - **Multicasting**
- **New applications include**
  - **Tele-immersion**

Copyright 2011 John Wiley & Sons, Inc

# Features of Future Internet

- Tele-immersion is a technology to be implemented with Internet2 that will enable users in different geographic locations to come together in a simulated environment to interact. Users will feel like they are actually looking, talking, and meeting with each other face-to-face in the same room.
- This is achieved using computers that recognize the presence and movements of individuals and objects, tracking those individuals and images, and reconstructing them onto one stereo-immersive surface.
- 3D reconstruction for tele-immersion is performed using stereo, which means two or more cameras take rapid sequential shots of the same object, continuously performing distance calculations, and projecting them into the computer-simulated environment, as to replicate real-time movement.

Copyright 2011 John Wiley & Sons, Inc

# 9.5 Implications for Management

- **Concern about traffic slowing down Internet**
  - **New fiber based circuits deployment along with Next Generation Internet**
- **Many new broadband technologies for high speed Internet access**
  - **Simple to move large amount of data into most homes and business → richer multimedia apps**

Copyright 2011 John Wiley & Sons, Inc

# Copyright 2011 John Wiley & Sons, Inc.

All rights reserved. Reproduction or translation of this work beyond that permitted in section 117 of the 1976 United States Copyright Act without express permission of the copyright owner is unlawful. Request for further information should be addressed to the Permissions Department, John Wiley & Sons, Inc. The purchaser may make back-up copies for his/her own use only and not for distribution or resale. The Publisher assumes no responsibility for errors, omissions, or damages caused by the use of these programs or from the use of the information herein.